九联科技 UNIONMAN

AX WIFI Router

Front indicator

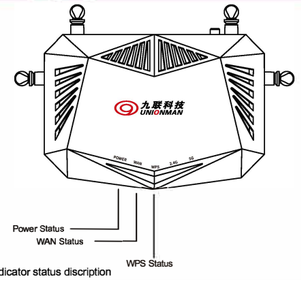

Indicator status discription

Indicator status discription	Colors	Labels	Status
Power indicator	Blue	POWER	On: Normal power supply
			Off: No power supply
Power indicator	Blue/ Red	WAN	Blue: Network connec
			Red: Network does not work even network cable plugged into WAN port
			Off: The device is not powered on or the WAN port is not plugged into the network cable
WPS indicator	Blue	WPS	On: MESH connected successfully
			Flashing: WPS is matching
			Off: No power supply or not in the state of WPS matching
2.4G/5G indicators	Blue	2.4G/5G	On: Wireless activated
			Flashing: Data transfering
			Off: No power supply or wireless interface blocked

If the indicator light is not normal, please check if the connection is correct

Cable and port connection instruction

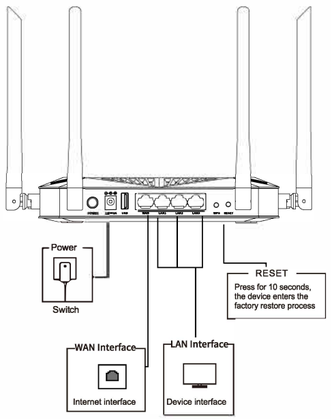

Configuration instruction

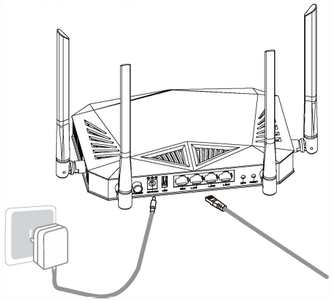

1 Connect the device
Connect the LAN interface and WAN interface (community broadband) on the router with an Ethernet cable (network cable).

2 Connect to Wi-Fi
Use a laptop or mobile phone to search for the SSID corresponding to the Wi-Fi network on the nameplate at the bottom of the device and join it.

3 Set up the network
Visit 192.168.10.1 through the browser to complete the setting, and log in according to the account password on the bottom nameplate.

Log in configuration interface

① Power on the router, and connect the mobile phone/computer to the router with a network cable or wirelessly.

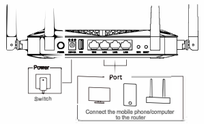

②Open the browser and enter 192.168.10.1 or wifi.cmcc/ to enter the login interface.

③Enter the user name USER and the configuration management password to log in. For the configuration management password, see the nameplate at the bottom

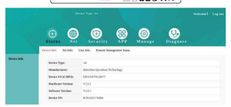

九联科技 UNIONMAN

Unionman Technology Co., Ltd.
el:0752-2699800
Executive standard: GY/T 241-2009
Address: No.5 Huitai Road, Huinan High-Tech Industrial Park, Huizhou, Guangdong, China (516025)

Modify WIFI name and password

Modify 2.4g WIFI name and password

① Select "Network" → "WLAN Network Configuration"

② Modify the 2.4g WIFI name in "SSID", and modify the WIFI password in "WPA pre-authentication shared key"

□After the modification is completed,click "SAVE" to save it and complete the modification of the wifi name and password

Modify WIFI name and password

Modify 5g WIFI name and password

①Select "Network" → "WLAN 5g Network Configuration"

② Modify the 5g WIFI name in "SSID", and modify the WIFI password in "WPA pre-authentication shared key"

□ After the modification is completed,click "SAVE" to save it and complete the modification of the wifi name and password

Environmental requirements

Co mponent s	Hazardous substance or element					
	(Pb)	(Hg)	(Cd)	(Cdr6+)	(PBB)	(PBDE)
Ho st	X	O	O	O	O	O
Ca bl assembly Pow e	X	O	O	O	O	O
embly Power supply /adapter	X	O	O	O	O	O
adapt r Plastic can d polymer	O	O	O	O	O	O
Metal part s	X	O	O	O	O	O
Dry battery	O	O	O	O	O	O
Remo e t	O	O	O	O	O	O

This form is compiled in accordance with the provisions of the SJ/T11364 standard.

O indicates that the content of this toxic and hazardous substance in all homogeneous materials of this part is below the limit requirement of the G B / T standard.

X indicates that the content of the toxic and hazardous substance in at least one of the homogeneous materials of the part exceeds G B / T 2 6 5 7 2 The specified limit requirements.

This table shows the hazardous substance information contained in this device. The hazardous substance information of the parts is based on the information provided by the supplier and the internal inspection results. The hazardous substances contained in some parts are impossible to replace under the current technical standards.

The number in this logo indicates that the EFUP of the product under normal use is 10 years. Some components may have an EFUP mark, and the EFUP shall be subject to the number in the mark. Due to different models, the product may not contain all the above components except the host. Please refer to the actual sales configuration of the product.

Recycling

This product bears the selective sorting symbol for Waste electrical and electronic equipment (WEEE).This means that this product must be handled according to European directive 2012/19 /EU in order to be recycled or dismantled.This will minimize the negative effects on the environment
and human health resulting from the possibility of the presence in the equipment substances, mixtures
and hazardous components.A user can give the product to a competent recycling organization,to WEEE collection points or to a distributor(in accordance with local regulations).

FCCNOTICE:
This equipment has been tested and found to comply with the limits for a Class B digital device, pursuant to Part 15 of the FCC Rules. These limits are designed to provide reasonable protection against harmful interference in a residential installation. This equipment generates, uses and can radiate radio frequency energy and, if not installed and used in accordance with the instructions, may cause harmful interference to radio communications. However, there is no guarantee that interference will not occur in a particular installation. If this equipment does cause harmful interference to radio or television reception, which can be determined by turning the equipment off and on, the user is encouraged to try to correct the interference by one or more of the following measures:
- Reorient or relocate the receiving antenna.
- Increase the separation between the equipment and receiver.
- Connect the equipment into an outlet on a circuit different from that to which the receiver is connected.
- Consult the dealer or an experienced radio/TV technician for help.

Changes or modifications not expressly approved by the party responsible for compliance could void the user's authority to operate the equipment.
This device complies with part 15 of the FCC Rules. Operation is subject to the following two conditions:
(1)This device may not cause harmful interference, and
(2)This device must accept any interference received, including interference that may cause undesired operation.
The equipment should be installed and operated with minimum distance 20cm between the radiator & your body.

Repair description

Warranty description

I. Thank you for purchasing our products. To protect the rights and interests of the purchaser, please fill in this card carefully, and read the following warranty terms carefully.
1. Please keep this warranty service card properly. If the warranty service card is lost, it will not be reissued. Please be sure to keep the invoice or copy or relevant valid proof of purchase. If you cannot provide a valid proof of purchase,Then the product warranty period will start from the date of manufacture.
2. This warranty card must be provided at the time of warranty.
3. The information filled in this warranty card should be true, otherwise it will be invalid.
4. If the host of this product is sold within 18 months, free after-sales maintenance service is guaranteed if a hardware failure occurs under normal use conditions.

II. The company has the right to charge maintenance service fees if the following factors are involved:
1. Due to natural disasters (floods, fires, earthquakes, lightning strikes, typhoons, etc.)
Damage caused by careless use;
2. Disassemble, repair, or send the product to a repair centre which is not certified by the company for inspection and repair;
3. The company's warranty identification label is torn or cannot be identified, the warranty service card is altered or the product is inconsistent;
4. Other problems and malfunctions caused by abnormal use.

III. The company will strictly abide by the Three Guarantees policy formulated by the state for warranty service.
The right to interpret the warranty regulations and contents belongs to our company, and are subject to change without notice.
Service hotline: 0752-2699800

Certificate of quality
Inspected

Warranty card

Customer information

Product name: _____
Product model: _____
Serial number: _____
Purchase date: _____
Customer name: _____
Contact number: _____
Contact adress: _____

Records of warranty

Date: _____
Faults and measures: _____
_____
_____
Date: _____
Faults and measures: _____
_____
_____

WARNING

This device complies with Part 15 of the FCC Rules. Operation is subject to the following two conditions: (1) this device may not cause harmful interference, and (2) this device must accept any interference received, including interference that may cause undesired operation

NOTE: This equipment has been tested and found to comply with the limits for a Class B digital device, pursuant to Part 15 of the FCC Rules. These limits are designed to provide reasonable protection against harmful interference in a residential installation. This equipment generates, uses and can radiate radio frequency energy and, if not installed and used in accordance with the instructions, may cause harmful interference to radio communications. However, there is no guarantee that interference will not occur in a particular installation.
If this equipment does cause harmful interference to radio or television reception, which can be determined by turning the equipment off and on, the user is encouraged to try to correct the interference by one or more of the following measures:
-- Reorient or relocate the receiving antenna.
-- Increase the separation between the equipment and receiver.
-- Connect the equipment into an outlet on a circuit different from that to which the receiver is connected.
-- Consult the dealer or an experienced radio/TV technician for help.

Warning: changes or modifications not expressly approved by the party responsible for compliance could void the user's authority to operate the equipment