AWC1094SG - VECTOR FOR PRODUCTION
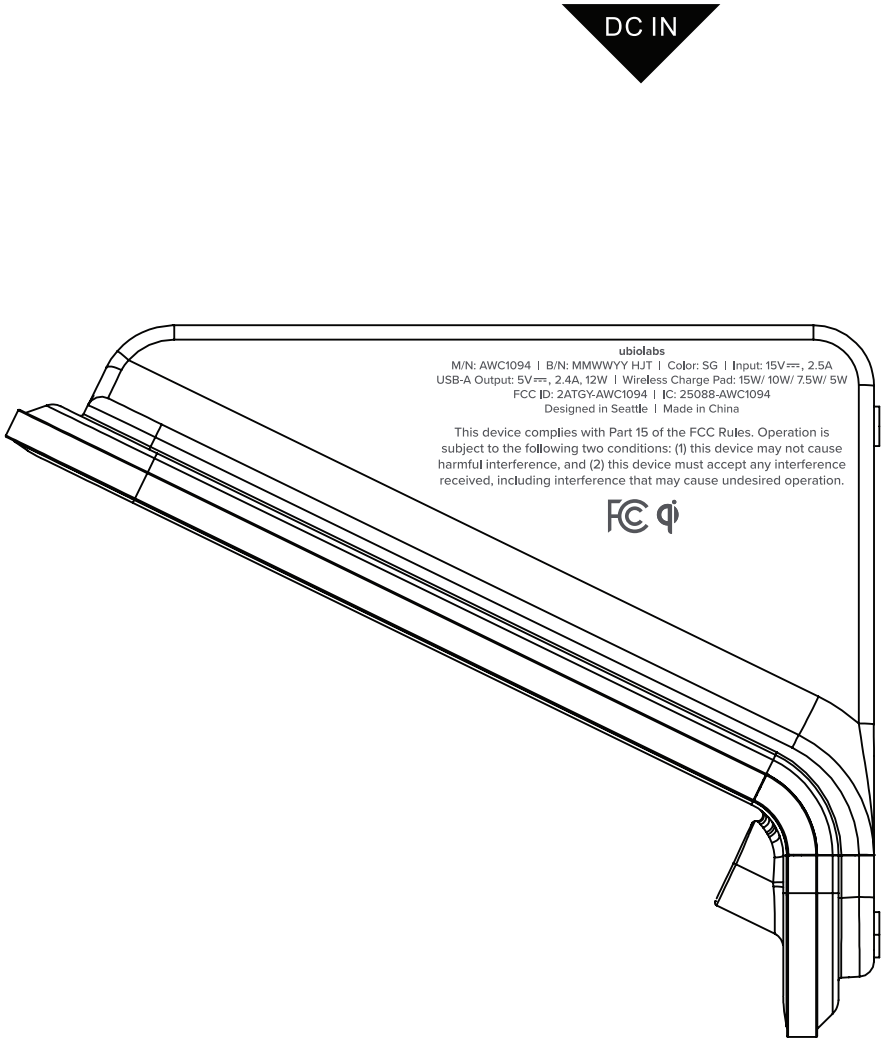
Pantone
Cool Gray 11c