RF MEASUREMENT REPORT

FCC ID:	2ATH6-AVG20WF5
Applicant:	AltumView Systems Inc.
Product:	AltumView Sentinare 2 Smart Activity Sensor
Model No.:	AVG2-0WF5
Brand Name:	AltumView
FCC Classification:	Digital Transmission System (DTS)
FCC Rule Part(s):	Part 15 Subpart C (Section 15.247)
Test Date:	March 03 ~ 13, 2022
Test Result:	Complies

Reviewed By: Sunny Sun

Approved By: Robin Wu

ACCREDITED
TESTING LABORATORY
CERTIFICATE #3628.01

The test results relate only to the samples tested.

This equipment has been shown to be capable of compliance with the applicable technical standards as indicated in the measurement report and was tested in accordance with the measurement procedures specified in ANSI C63.10-2013. Test results reported herein relate only to the item(s) tested.

The test report shall not be reproduced except in full without the written approval of MRT Technology (Suzhou) Co., Ltd.

Revision History

Report No.	Version	Description	Issue Date	Note
2202RSU032-U3	Rev. 01	Initial Report	05-07-2022	Valid

CONTENTS

Description Page

1. General Information 5

1.1. Applicant 5
1.2. Manufacturer 5
1.3. Testing Facility 5
1.4. Product Information 6
1.5. Radio Specification 6
1.6. Working Frequencies 6

2. Test Configuration 7

2.1. Test Mode 7
2.2. Test System Connection Diagram 7
2.3. Test Software 7
2.4. Applied Standards 8
2.5. Test Environment Condition 8

3. Antenna Requirements 9

4. Measuring Instrument 10

5. Measurement Uncertainty 11

6. Test Result 12

6.1. Summary 12
6.2. 6dB Bandwidth Measurement 13
6.2.1. Test Limit 13
6.2.2. Test Procedure 13
6.2.3. Test Setting 13
6.2.4. Test Setup 13
6.2.5. Test Result 13
6.3. Output Power Measurement 14
6.3.1. Test Limit 14
6.3.2. Test Procedure 14
6.3.3. Test Setting 14
6.3.4. Test Setup 15
6.3.5. Test Result 15
6.4. Power Spectral Density Measurement 16
6.4.1. Test Limit 16
6.4.2. Test Procedure 16
6.4.3. Test Setting 16
6.4.4. Test Setup 17

6.4.5. Test Result 17
6.5. Conducted Band Edge and Out-of-Band Emissions Measurement 18
6.5.1. Test Limit 18
6.5.2. Test Procedure 18
6.5.3. Test Settitng 18
6.5.4. Test Setup 19
6.5.5. Test Result 19
6.6. Radiated Spurious Emission Measurement 20
6.6.1. Test Limit 20
6.6.2. Test Procedure 20
6.6.3. Test Setting 20
6.6.4. Test Setup 22
6.6.5. Test Result 22
6.7. Radiated Restricted Band Edge Measurement 23
6.7.1. Test Limit 23
6.7.2. Test Procedure 24
6.7.3. Test Setting 24
6.7.4. Test Setup 25
6.7.5. Test Result 25
6.8. AC Conducted Emissions Measurement 26
6.8.1. Test Limit 26
6.8.2. Test Setup 26
6.8.3. Test Result 26

Appendix A – Test Result 27

A.1 Duty Cycle Test Result 27
A.2 6dB Bandwidth Test Result 28
A.3 Output Power Test Result 32
A.4 Power Spectral Density Test Result 34
A.5 Conducted Band Edge and Out-of-Band Emissions Test Result 38
A.6 Radiated Spurious Emission Test Result 45
A.7 Radiated Restricted Band Edge Test Result 50
A.8 AC Conducted Emissions Test Result 74

Appendix B – Test Setup Photograph 76

Appendix C – EUT Photograph 77

1. General Information

1.1. Applicant

AltumView Systems Inc.

#223-3989 Henning Drive, Burnaby, BC, V5C 6P8, Canada

1.2. Manufacturer

AltumView Systems Inc.

#223-3989 Henning Drive, Burnaby, BC, V5C 6P8, Canada

1.3. Testing Facility

☒	**Test Site – MRT Suzhou Laboratory**
	Laboratory Location (Suzhou - Wuzhong) D8 Building, No.2 Tian'edang Rd., Wuzhong Economic Development Zone, Suzhou, China **Laboratory Location (Suzhou - SIP)** 4b Building, Liando U Valley, No.200 Xingpu Rd., Shengpu Town, Suzhou Industrial Park, China
	Laboratory Accreditations
	A2LA: 3628.01 CNAS: L10551 FCC: CN1166 ISED: CN0001 VCCI: ☐R-20025 ☐G-20034 ☐C-20020 ☐T-20020 ☐R-20141 ☐G-20134 ☐C-20103 ☐T-20104
☐	**Test Site – MRT Shenzhen Laboratory**
	Laboratory Location (Shenzhen) 1G, Building A, Junxiangda Building, Zhongshanyuan Road West, Nanshan District, Shenzhen, China
	Laboratory Accreditations
	A2LA: 3628.02 CNAS: L10551 FCC: CN1284 ISED: CN0105
☐	**Test Site – MRT Taiwan Laboratory**
	Laboratory Location (Taiwan) No. 38, Fuxing 2nd Rd., Guishan Dist., Taoyuan City 333, Taiwan (R.O.C.)
	Laboratory Accreditations
	TAF: L3261-190725 FCC: 291082, TW3261 ISED: TW3261

1.4. Product Information

Product Name	AltumView Sentinare 2 Smart Activity Sensor
Model No.	AVG2-0WF5
Brand Name	AltumView
Serial No.	20220217Sample#05, 20220408Sample#02
Wi-Fi Specification	802.11a/b/g/n
Bluetooth Version	V5.0 single mode, BR/EDR
Antenna Information	Refer to section 1.5

Remark:

1. The information of EUT was provided by the manufacturer, and the accuracy of the information shall be the responsibility of the manufacturer.

1.5. Radio Specification

Frequency Range	802.11b/g/n-HT20: 2412 ~ 2462MHz
Channel Number	802.11b/g/n-HT20: 11
Type of Modulation	802.11b: DSSS 802.11g/n: OFDM
Data Rate	802.11b: 1/2/5.5/11Mbps 802.11g: 6/9/12/18/24/36/48/54Mbps 802.11n: up to 72.2Mbps
Antenna Specification	PCB Antenna, 2.24dBi

Note: For other features of this EUT, test report will be issued separately.

1.6. Working Frequencies

802.11b/g/n-HT20

Channel	Frequency	Channel	Frequency	Channel	Frequency
01	2412 MHz	02	2417 MHz	03	2422 MHz
04	2427 MHz	05	2432 MHz	06	2437 MHz
07	2442 MHz	08	2447 MHz	09	2452 MHz
10	2457 MHz	11	2462 MHz	--	--

2. Test Configuration

2.1. Test Mode

Mode 1: Transmit by 802.11b (11Mbps)
Mode 2: Transmit by 802.11g (6Mbps)
Mode 3: Transmit by 802.11n-HT20 (MCS0)

2.2. Test System Connection Diagram

The device was tested per the guidance ANSI C63.10: 2013 was used to reference the appropriate EUT setup for radiated emissions testing and AC line conducted testing.

Connection Diagram – Radiated Emission testing & AC Conducted Emissions

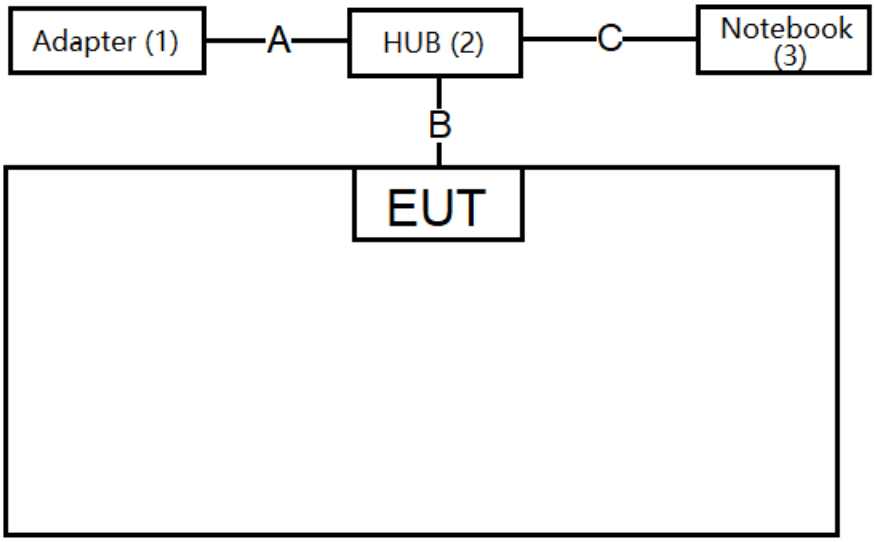

Cable Type		Cable Description
A	Power Cable	Non shielded, 1.5m
B	USB Cable	Shielding, 1.5m
C	USB Cable	Shielding, 0.2m

Product		Manufacturer	Model No.
1	Adapter	Shenzhen CHANZEHO	CZJ024050200USWH
2	HUB	Manhattan	161039
3	Notebook (for RF Test)	HP	HP 24-df052wcn

2.3. Test Software

The test utility software used during testing was “ADB”.

2.4. Applied Standards

According to the specifications of the manufacturer, the EUT must comply with the requirements of the following standards:

- FCC Part 15.247
- KDB 558074 D01v05r02
- ANSI C63.10-2013

2.5. Test Environment Condition

Ambient Temperature	15 ~ 35°C
Relative Humidity	20 ~ 75%RH

3. Antenna Requirements

Excerpt from §15.203 of the FCC Rules/Regulations:

"An intentional radiator antenna shall be designed to ensure that no antenna other than that furnished by the responsible party can be used with the device. The use of a permanently attached antenna or of an antenna that uses a unique coupling to the intentional radiator shall be considered sufficient to comply with the provisions of this section."

- The antenna of the device is **permanently attached.**
- There are no provisions for connection to an external antenna.

Conclusion:

The unit complies with the requirement of §15.203.

4. Measuring Instrument

Instrument	Manufacturer	Model No.	Asset No.	Cali. Interval	Cali. Due Date	Test Site
Horn Antenna	R&S	HF907	MRTSUE06611	1 year	2022/9/12	SIP-AC3
Horn Antenna	Schwarzbeck	BBHA 9170	MRTSUE06598	1 year	2022/11/9	SIP-AC3
Anechoic Chamber	RIKEN	SIP-AC3	MRTSUE06782	1 year	2022/12/23	SIP-AC3
Loop Antenna	Schwarzbeck	FMZB 1519 B	MRTSUE06937	1 year	2022/3/13	SIP-AC3
Loop Antenna	Schwarzbeck	FMZB 1519 B	MRTSUE06937	1 year	2023/3/14	SIP-AC3
TRILOG Antenna	Schwarzbeck	VULB 9168	MRTSUE06646	1 year	2022/8/26	SIP-AC3
Preamplifier	EMCI	EMC012645SE	MRTSUE06642	1 year	2023/1/13	SIP-AC3
Preamplifier	EMCI	EMC001330	MRTSUE06643	1 year	2023/1/13	SIP-AC3
EMI Test Receiver	R&S	ESR3	MRTSUE06613	1 year	2022/6/24	SIP-AC3
Thermohygrometer	testo	608-H1	MRTSUE06619	1 year	2022/11/2	SIP-AC3
Thermohygrometer	testo	608-H1	MRTSUE06622	1 year	2022/11/28	SIP-AC3
Signal Analyzer	Keysight	N9020B	MRTSUE06604	1 year	2022/9/7	SIP-AC3
Two-Line V-Network	R&S	ENV216	MRTSUE06003	1 year	2022/6/8	SIP-SR2
ISN	R&S	ENY81	MRTSUE06608	1 year	2022/6/7	SIP-SR2
ISN	R&S	ENY81-CA6	MRTSUE06609	1 year	2022/6/7	SIP-SR2
EMI Test Receiver	R&S	ESR3	MRTSUE06612	1 year	2022/6/24	SIP-SR2
Four-Line V-Network	R&S	ENV432	MRTSUE06614	1 year	2022/10/10	SIP-SR2
CDNE	Schwarzbeck	CDNE M2	MRTSUE06934	1 year	2023/2/27	SIP-SR2
CDNE	Schwarzbeck	CDNE M3	MRTSUE06935	1 year	2023/2/27	SIP-SR2
50 Ω to 150 Ω Adapter	Schwarzbeck	SR100-6W	MRTSUE06936	1 year	2023/2/27	SIP-SR2
Shielding Room	MIX-BEP	SIP-SR2	MRTSUE06949	/	/	SIP-SR2
USB Power Sensor	Keysight	U8489A	MRTSUE06448	/	/	SIP-TR2
Thermohygrometer	testo	622	MRTSUE06628	1 year	2023/1/6	SIP-TR2

Software	Version	Function
EMI Software	V3.0.0	EMI Test Software

5. Measurement Uncertainty

Where relevant, the following test uncertainty levels have been estimated for tests performed on the EUT as specified in CISPR 16-4-2. This uncertainty represents an expanded uncertainty expressed at approximately the 95% confidence level using a coverage factor of k = 2.

AC Conducted Emission Measurement
Measurement Uncertainty for a Level of Confidence of 95% (U=2Uc(y)): 9kHz~150kHz: 3.74dB 150kHz~30MHz: 3.44dB
Radiated Disturbance
Measurement Uncertainty for a Level of Confidence of 95% (U=2Uc(y)): Horizontal: 30MHz~300MHz: 5.04dB 300MHz~1GHz: 4.95dB 1GHz~40GHz: 6.40dB Vertical: 30MHz~300MHz: 5.24dB 300MHz~1GHz: 6.03dB 1GHz~40GHz: 6.40dB
Spurious Emissions, Conducted
Measuring Uncertainty for a Level of Confidence of 95% (U=2Uc(y)): 0.78dB
Output Power
Measuring Uncertainty for a Level of Confidence of 95% (U=2Uc(y)): 1.13dB
Power Spectrum Density
Measuring Uncertainty for a Level of Confidence of 95% (U=2Uc(y)): 1.15dB
Occupied Bandwidth
Measuring Uncertainty for a Level of Confidence of 95% (U=2Uc(y)): 0.28%

6. Test Result

6.1. Summary

FCC Section(s)	Test Description	Test Condition	Verdict
15.247(a)(2)	6dB Bandwidth	Conducted	Pass
15.247(b)(3)	Output Power		Pass
15.247(e)	Power Spectral Density		Pass
15.247(d)	Band Edge / Out-of-Band Emissions		Pass
15.205, 15.209	General Field Strength (Restricted Bands and Radiated Emission)	Radiated	Pass
15.207	AC Conducted Emissions 150kHz - 30MHz	Line Conducted	Pass

Remark:

1. The analyzer plots shown in this section were all taken with a correction table loaded into the analyzer. The correction table was used to account for the losses of the cables and attenuators used as part of the system to connect the EUT to the analyzer at all frequencies of interest.
2. For radiated emission tests, every axis (X, Y, Z) was also verified. The test results shown in the following sections represent the worst-case emissions.

6.2. 6dB Bandwidth Measurement

6.2.1. Test Limit

The minimum 6dB bandwidth shall be at least 500 kHz.

6.2.2. Test Procedure

ANSI C63.10 - 2013 - Section 11.8

6.2.3. Test Setting

1. The Spectrum's automatic bandwidth measurement capability was used to perform the 6dB bandwidth measurement. The "X" dB bandwidth parameter was set to X = 6. The bandwidth measurement was not influenced by any intermediate power nulls in the fundamental emission.
2. Set RBW = 100 kHz
3. VBW ≥ 3 × RBW
4. Detector = Peak
5. Trace mode = Max hold
6. Sweep = Auto couple
7. Allow the trace to stabilize

6.2.4. Test Setup

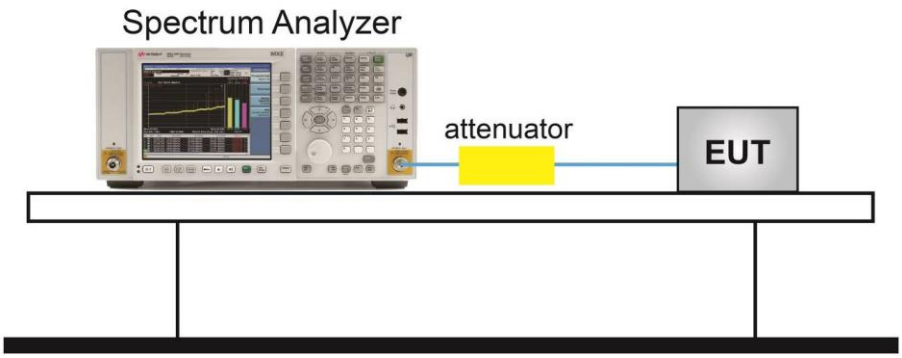

6.2.5. Test Result

Refer to Appendix A.2.

6.3. Output Power Measurement

6.3.1. Test Limit

The maximum output power shall be less 1 Watt (30dBm).

The conducted output power limit specified in paragraph FCC Part 15.247(b) of this section is based on the use of antennas with directional gains that do not exceed 6 dBi. If transmitting antennas of directional gain greater than 6 dBi are used, the conducted output power from the intentional radiator shall be reduced below the stated values in paragraphs FCC Part 15.247(b)(3) of this section, as appropriate, by the amount in dB that the directional gain of the antenna exceeds 6 dBi.

6.3.2. Test Procedure

ANSI C63.10 - 2013 - Section 11.9.1.3 (PKPM1 Peak power meter method)

ANSI C63.10 - 2013 - Section 11.9.2.3.2 (Method AVGSA-1A)

6.3.3. Test Setting

PKPM1 Peak power meter method

The maximum peak conducted output power may be measured using a broadband peak RF power meter. The power meter shall have a video bandwidth that is greater than or equal to the DTS bandwidth and shall use a fast-responding diode detector.

Average Power Measurement

Average power measurements were performed only when the EUT was transmitting at its maximum power control level using a broadband power meter with a pulse sensor. The power meter implemented triggering and gating capabilities which were set up such that power measurements were recorded only during the ON time of the transmitter.

6.3.4. Test Setup

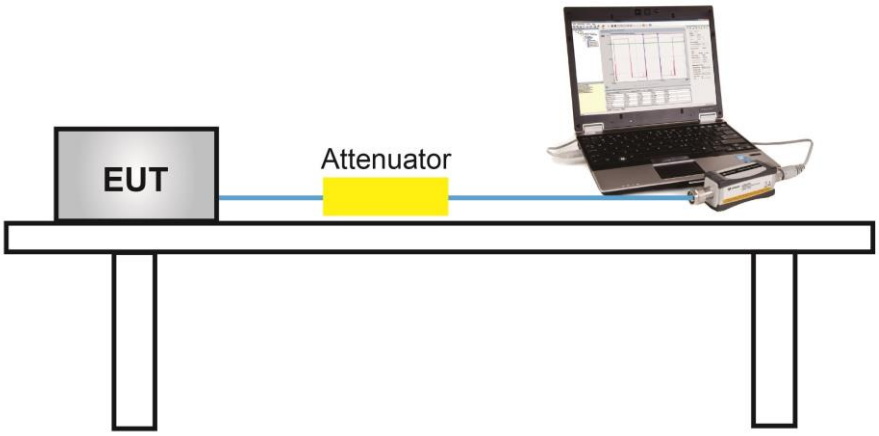

6.3.5. Test Result

Refer to Appendix A.3.

6.4. Power Spectral Density Measurement

6.4.1. Test Limit

The maximum permissible power spectral density is 8dBm in any 3 kHz band.

The same method of determining the conducted output power shall be used to determine the power spectral density.

6.4.2. Test Procedure

ANSI C63.10 - 2013 - Section 11.10.5

6.4.3. Test Setting

1. Set instrument center frequency to DTS channel center frequency.
2. Set span to at least 1.5 times the OBW.
3. RBW = 10 kHz.
4. VBW = 30 kHz.
5. Detector = Peak
6. Sweep time = auto couple.
7. Trace mode = max hold.
8. Allow trace to fully stabilize.
9. Use the peak marker function to determine the maximum amplitude level within the RBW.
10. If measured value exceeds requirement, then reduce RBW (but no less than 3 kHz) and repeat.

6.4.4. Test Setup

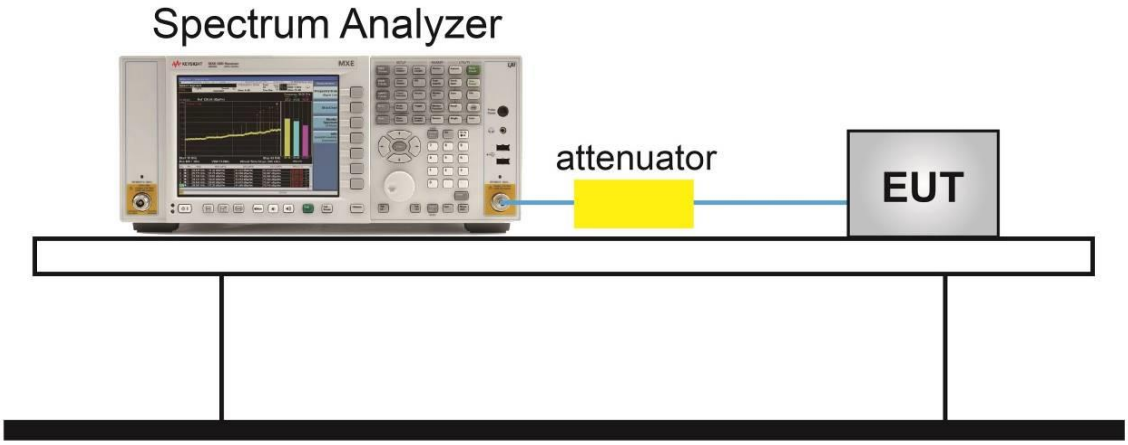

6.4.5. Test Result

Refer to Appendix A.4.

6.5. Conducted Band Edge and Out-of-Band Emissions Measurement

6.5.1. Test Limit

The limit for out-of-band spurious emissions at the band edge is 20dB below the fundamental emission level, as determined from the in-band power measurement of the DTS channel performed in a 100 kHz bandwidth per the PSD procedure.

6.5.2. Test Procedure

ANSI C63.10-2013 - Section 11.11

6.5.3. Test Settitng

Reference level measurement

1. Set instrument center frequency to DTS channel center frequency
2. Set the span to ≥ 1.5 times the DTS bandwidth
3. Set the RBW = 100 kHz
4. Set the VBW ≥ 3 x RBW
5. Detector = peak
6. Sweep time = auto couple
7. Trace mode = max hold
8. Allow trace to fully stabilize

Emission level measurement

1. Set the center frequency and span to encompass frequency range to be measured
2. RBW = 100kHz
3. VBW = 300kHz
4. Detector = Peak
5. Trace mode = max hold
6. Sweep time = auto couple
7. The trace was allowed to stabilize

6.5.4. Test Setup

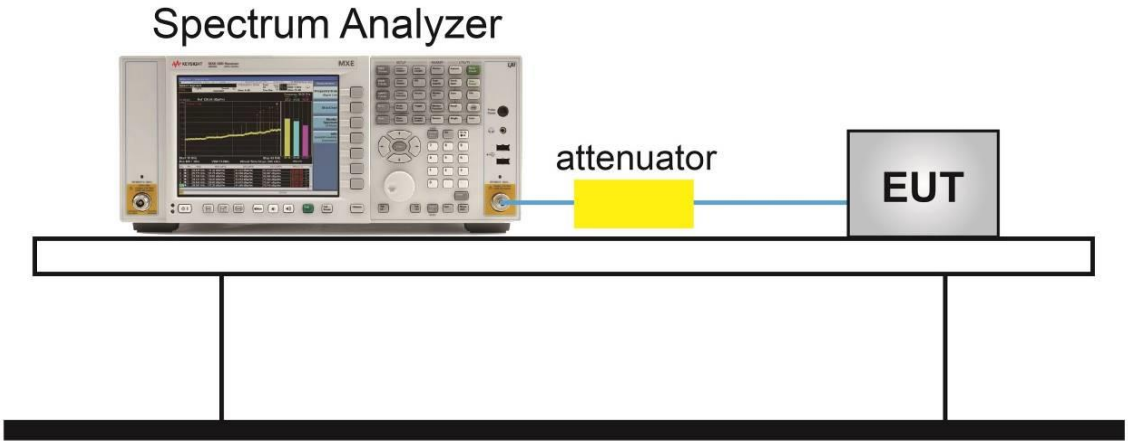

6.5.5. Test Result

Refer to Appendix A.5.

6.6. Radiated Spurious Emission Measurement

6.6.1. Test Limit

All out of band emissions appearing in a restricted band as specified in Section 15.205 of the Title 47 CFR must not exceed the limits shown in Table per Section 15.209.

FCC Part 15 Subpart C Paragraph 15.209		
Frequency [MHz]	Field Strength [uV/m]	Measured Distance [Meters]
0.009 - 0.490	2400/F (kHz)	300
0.490 - 1.705	24000/F (kHz)	30
1.705 - 30	30	30
30 - 88	100	3
88 - 216	150	3
216 - 960	200	3
Above 960	500	3

6.6.2. Test Procedure

ANSI C63.10 - 2013 - Section 11.11 & 11.12

ANSI C63.10 - 2013 - Section 6.3 (General Requirements)

ANSI C63.10 - 2013 - Section 6.4 (Standard test method below 30MHz)

ANSI C63.10 - 2013 - Section 6.5 (Standard test method above 30MHz to 1GHz)

ANSI C63.10 - 2013 - Section 6.6 (Standard test method above 1GHz)

6.6.3. Test Setting

Table 1 - RBW as a function of frequency

Frequency	RBW
9 ~ 150 kHz	200 ~ 300 Hz
0.15 ~ 30 MHz	9 ~ 10 kHz
30 ~ 1000 MHz	100 ~ 120 kHz
> 1000MHz	1MHz

Quasi-Peak Measurements below 1GHz

1. Analyzer center frequency was set to the frequency of the radiated spurious emission of interest

2. Span was set greater than 1MHz

3. RBW = as specified in Table 1

4. Detector = CISPR quasi-peak

5. Sweep time = auto couple

6. Trace was allowed to stabilize

Peak Measurements above 1GHz

1. Analyzer center frequency was set to the frequency of the radiated spurious emission of interest

2. RBW = 1MHz

3. VBW = 3MHz

4. Detector = peak

5. Sweep time = auto couple

6. Trace mode = max hold

7. Trace was allowed to stabilize

Average Measurements above 1GHz (Method VB)

1. Analyzer center frequency was set to the frequency of the radiated spurious emission of interest

2. RBW = 1MHz

3. VBW; If the EUT is configured to transmit with duty cycle ≥ 98%, set VBW = 10 Hz.

If the EUT duty cycle is < 98%, set VBW ≥ 1/T. T is the minimum transmission duration.

4. Detector = Peak

5. Sweep time = auto

6. Trace mode = max hold

7. Trace was allowed to stabilize

6.6.4. Test Setup

Below 1GHz Test Setup:

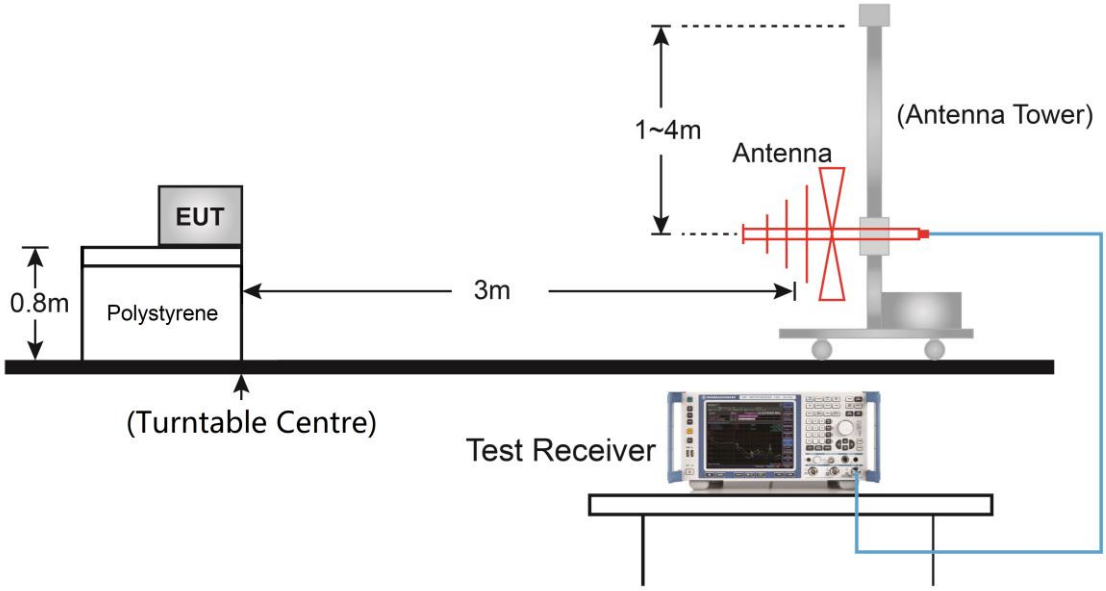

Above 1GHz Test Setup:

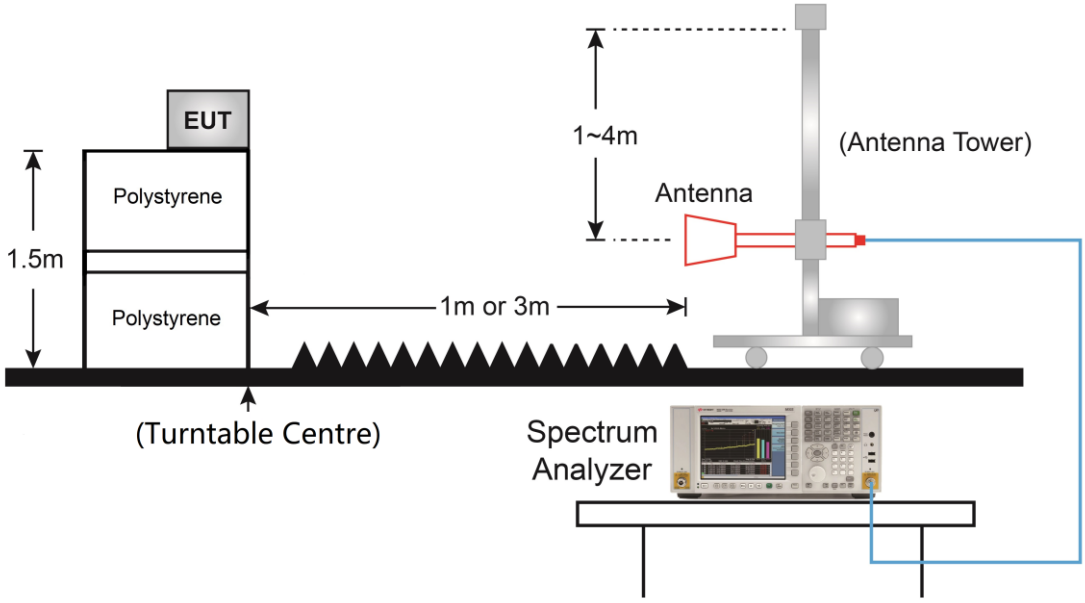

6.6.5. Test Result

Refer to Appendix A.6.

6.7. Radiated Restricted Band Edge Measurement

6.7.1. Test Limit

For 15.205 requirement:

Radiated emissions which fall in the restricted bands, as defined in Section 15.205(a) of FCC part 15, must also comply with the radiated emission limits specified in Section 15.209(a).

Frequency (MHz)	Frequency (MHz)	Frequency (MHz)	Frequency (GHz)
0.090 - 0.110	16.42 - 16.423	399.9 - 410	4.5 - 5.15
[1] 0.495 - 0.505	16.69475 - 16.69525	608 - 614	5.35 - 5.46
2.1735 - 2.1905	16.80425 - 16.80475	960 - 1240	7.25 - 7.75
4.125 - 4.128	25.5 - 25.67	1300 - 1427	8.025 - 8.5
4.17725 - 4.17775	37.5 - 38.25	1435 - 1626.5	9.0 - 9.2
4.20725 - 4.20775	73 - 74.6	1645.5 - 1646.5	9.3 - 9.5
6.215 - 6.218	74.8 - 75.2	1660 - 1710	10.6 - 12.7
6.26775 - 6.26825	108 - 121.94	1718.8 - 1722.2	13.25 - 13.4
6.31175 - 6.31225	123 - 138	2200 - 2300	14.47 - 14.5
8.291 - 8.294	149.9 - 150.05	2310 - 2390	15.35 - 16.2
8.362 - 8.366	156.52475 - 156.52525	2483.5 - 2500	17.7 - 21.4
8.37625 - 8.38675	156.7 - 156.9	2690 - 2900	22.01 - 23.12
8.41425 - 8.41475	162.0125 - 167.17	3260 - 3267	23.6 - 24.0
12.29 - 12.293	167.72 - 173.2	3332 - 3339	31.2 - 31.8
12.51975 - 12.52025	240 - 285	3345.8 - 3358	36.43 - 36.5
12.57675 - 12.57725	322 - 335.4	3600 - 4400	([2])
13.36 - 13.41	--	--	--

All out of band emissions appearing in a restricted band as specified in Section 15.205 of the Title 47CFR must not exceed the limits shown in Table per Section 15.209.

FCC Part 15 Subpart C Paragraph 15.209		
Frequency [MHz]	Field Strength [uV/m]	Measured Distance [Meters]
0.009 - 0.490	2400/F (kHz)	300
0.490 - 1.705	24000/F (kHz)	30
1.705 - 30	30	30
30 - 88	100	3
88 - 216	150	3
216 - 960	200	3
Above 960	500	3

6.7.2. Test Procedure

ANSI C63.10-2013 Section 6.3

ANSI C63.10-2013 Section 6.6

ANSI C63.10-2013 Section 11.13

6.7.3. Test Setting

Peak Field Strength Measurements

1. Analyzer center frequency was set to the frequency of the radiated spurious emission of interest
2. RBW = 1MHz
3. VBW = 3MHz
4. Detector = peak
5. Sweep time = auto couple
6. Trace mode = max hold
7. Trace was allowed to stabilize

Average Field Strength Measurements

1. Analyzer center frequency was set to the frequency of the radiated spurious emission of interest
2. RBW = 1MHz
3. VBW ≥ 1/T
4. As an alternative, the instrument may be set to linear detector mode. Ensure that video filtering is applied in linear voltage domain (rather than in a log or dB domain). Some instruments require linear display mode in order to accomplish this. Others have a setting for Average-VBW Type, which can be set to "Voltage" regardless of the display mode
5. Detector = Peak
6. Sweep time = auto
7. Trace mode = max hold
8. Allow max hold to run for at least 50 times (1/duty cycle) traces

6.7.4. Test Setup

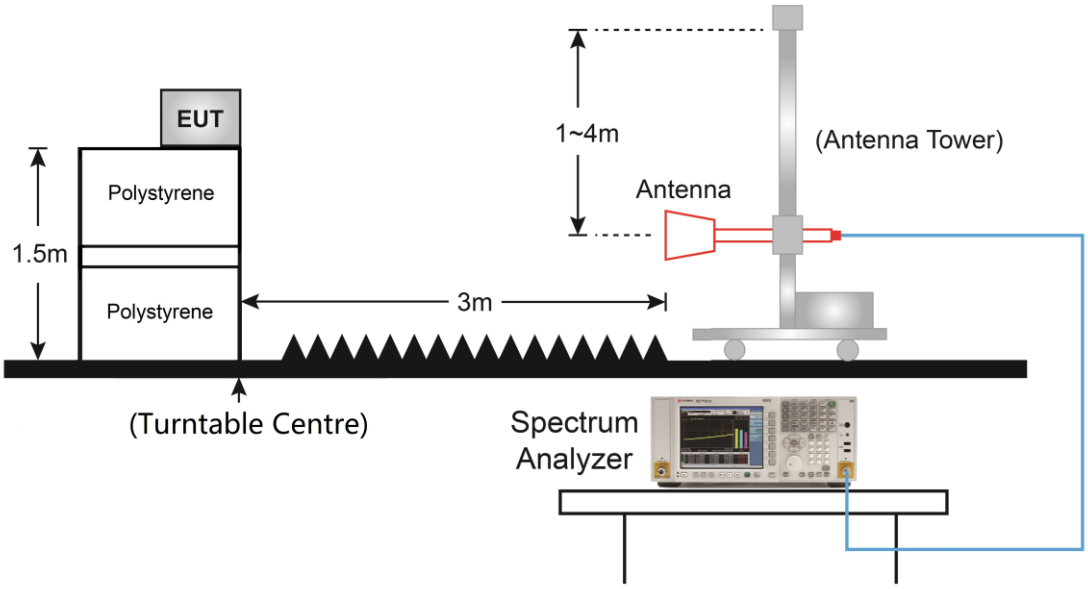

6.7.5. Test Result

Refer to Appendix A.7.

6.8. AC Conducted Emissions Measurement

6.8.1. Test Limit

FCC Part 15 Subpart C Paragraph 15.207 Limits		
Frequency (MHz)	QP (dBuV)	AV (dBuV)
0.15 - 0.50	66 - 56	56 - 46
0.50 - 5.0	56	46
5.0 - 30	60	50
Note 1: The lower limit shall apply at the transition frequencies. Note 2: The limit decreases linearly with the logarithm of the frequency in the range 0.15MHz to 0.5MHz.		

6.8.2. Test Setup

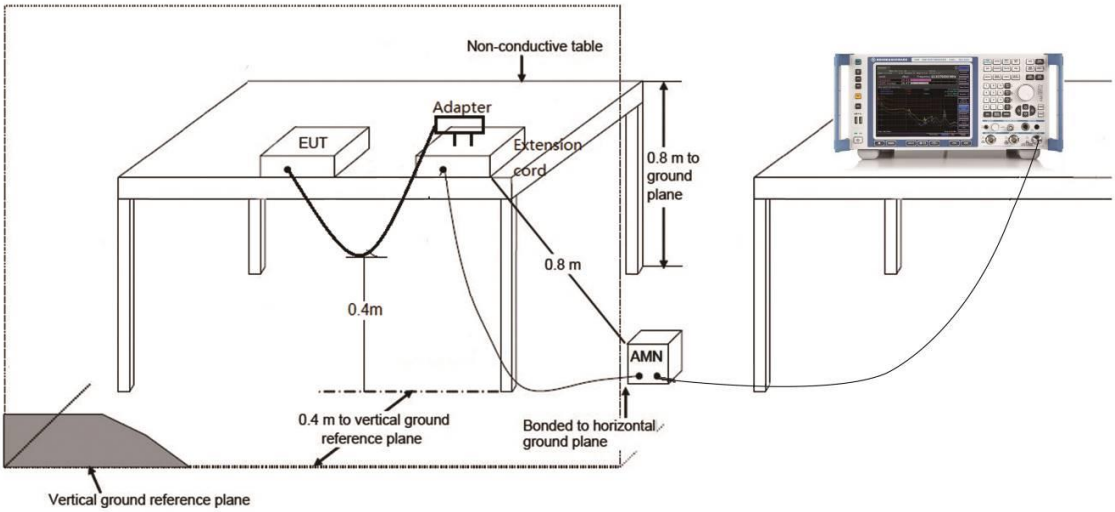

6.8.3. Test Result

Refer to Appendix A.8.

Appendix A – Test Result

A.1 Duty Cycle Test Result

Test Mode	Duty Cycle
802.11b	97.33%
802.11g	97.86%
802.11n-HT20	97.70%

Duty Cycle (T = Transmission Duration)	
802.11b (T = 1.203ms)	802.11g (T = 2.060ms)
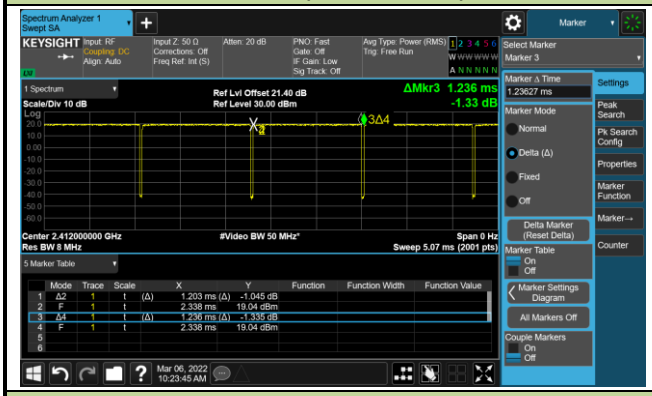	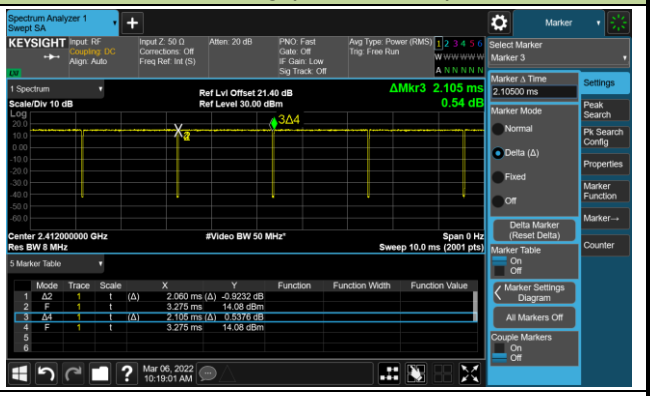
802.11n-HT20 (T = 1.910ms)	
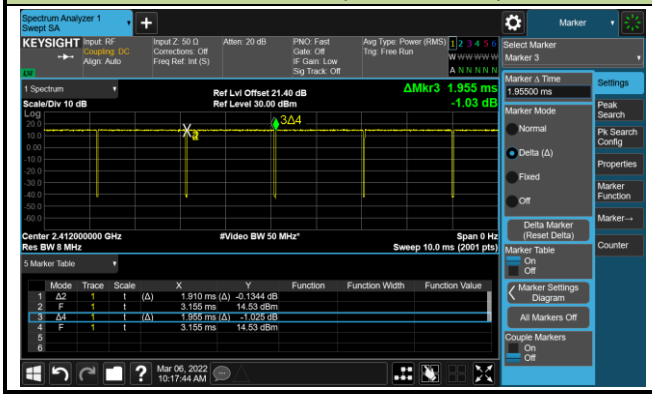	

A.2 6dB Bandwidth Test Result

Test Site	SIP-TR2	Test Engineer	Alisa Deng
Test Date	2022/03/06		

Test Mode	Data Rate / MCS	Channel No.	Frequency (MHz)	6dB Bandwidth (MHz)	Limit (MHz)
11b	11Mbps	01	2412	9.070	≥ 0.5
11b	11Mbps	06	2437	9.052	≥ 0.5
11b	11Mbps	11	2462	9.293	≥ 0.5
11g	6Mbps	01	2412	15.15	≥ 0.5
11g	6Mbps	06	2437	15.15	≥ 0.5
11g	6Mbps	11	2462	15.14	≥ 0.5
11n-HT20	MCS0	01	2412	15.66	≥ 0.5
11n-HT20	MCS0	06	2437	15.14	≥ 0.5
11n-HT20	MCS0	11	2462	15.38	≥ 0.5

802.11b 6dB Bandwidth	
Channel 01 (2412MHz)	Channel 06 (2437MHz)
Channel 11 (2462MHz)	

802.11g 6dB Bandwidth	
Channel 01 (2412MHz)	Channel 06 (2437MHz)
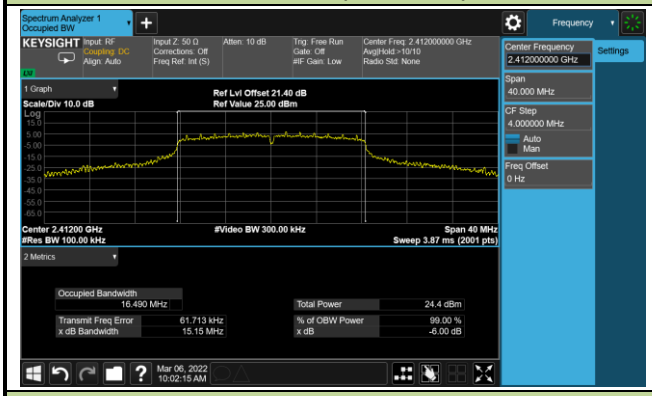	
Channel 11 (2462MHz)	
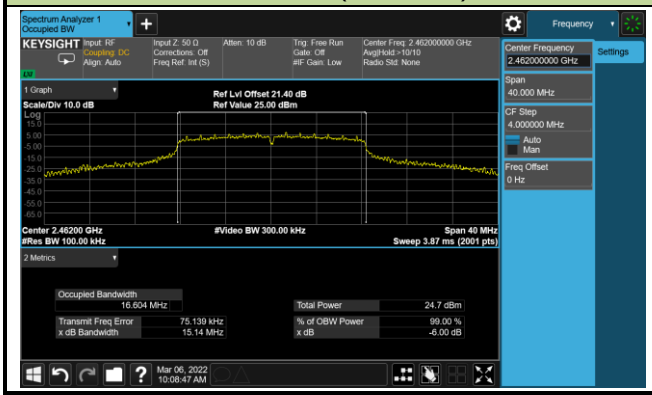	

802.11n-HT20 6dB Bandwidth	
Channel 01 (2412MHz)	Channel 06 (2437MHz)
Channel 11 (2462MHz)	

A.3 Output Power Test Result

Power output test was verified over all data rates of each mode shown as below, and then choose the maximum power output (gray marker) for final test of each channel.

Test Mode	Bandwidth (MHz)	Channel No.	Frequency (MHz)	Data Rate / MCS	Peak Power (dBm)
802.11b	20	1	2412	1Mbps	19.64
				5.5Mbps	19.91
				11Mbps	20.24
802.11g	20	1	2412	6Mbps	17.54
				24Mbps	17.17
				54Mbps	16.33
802.11n	20	1	2412	MCS0	17.63
				MCS4	17.28
				MCS7	15.72

Test Site	SIP-TR2	Test Engineer	Alisa Deng
Test Date	2022/03/03 ~ 2022/04/08		

Test Mode	Data Rate/ MCS	Channel No.	Freq. (MHz)	Output Power (dBm)	Limit (dBm)
Test Result of Peak Output Power					
11b	11Mbps	01	2412	22.62	≤ 30.00
11b	11Mbps	06	2437	22.60	≤ 30.00
11b	11Mbps	11	2462	20.58	≤ 30.00
11g	6Mbps	01	2412	23.89	≤ 30.00
11g	6Mbps	06	2437	23.87	≤ 30.00
11g	6Mbps	11	2462	23.30	≤ 30.00
11n-HT20	MCS0	01	2412	23.19	≤ 30.00
11n-HT20	MCS0	06	2437	23.87	≤ 30.00
11n-HT20	MCS0	11	2462	22.63	≤ 30.00
Test Result of Average Output Power (Reporting Only)					
11b	11Mbps	01	2412	20.25	≤ 30.00
11b	11Mbps	06	2437	20.23	≤ 30.00
11b	11Mbps	11	2462	20.10	≤ 30.00
11g	6Mbps	01	2412	20.10	≤ 30.00
11g	6Mbps	06	2437	17.42	≤ 30.00
11g	6Mbps	11	2462	15.68	≤ 30.00
11n-HT20	MCS0	01	2412	15.58	≤ 30.00
11n-HT20	MCS0	06	2437	17.47	≤ 30.00
11n-HT20	MCS0	11	2462	13.67	≤ 30.00

A.4 Power Spectral Density Test Result

Test Site	SIP-TR2	Test Engineer	Alisa Deng
Test Date	2022/03/06 ~ 2022/03/13		

Test Mode	Data Rate/ MCS	Channel No.	Freq. (MHz)	PKPSD (dBm / 3kHz)	Limit (dBm / 3kHz)	Result
11b	11Mbps	01	2412	-2.23	≤ 8.00	Pass
11b	11Mbps	06	2437	-1.62	≤ 8.00	Pass
11b	11Mbps	11	2462	-2.19	≤ 8.00	Pass
11g	6Mbps	01	2412	-6.53	≤ 8.00	Pass
11g	6Mbps	06	2437	-6.51	≤ 8.00	Pass
11g	6Mbps	11	2462	-8.15	≤ 8.00	Pass
11n-HT20	MCS0	01	2412	-8.17	≤ 8.00	Pass
11n-HT20	MCS0	06	2437	-6.55	≤ 8.00	Pass
11n-HT20	MCS0	11	2462	-10.21	≤ 8.00	Pass

802.11b - PKPSD	
Channel 01 (2412MHz)	Channel 06 (2437MHz)
	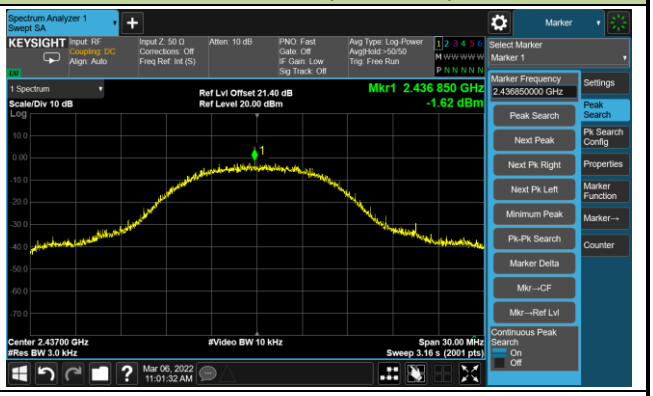
Channel 11 (2462MHz)	
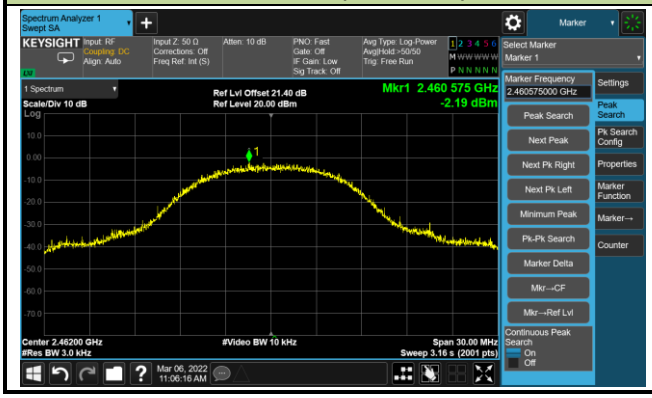	

802.11g - PKPSD	
Channel 01 (2412MHz)	Channel 06 (2437MHz)
	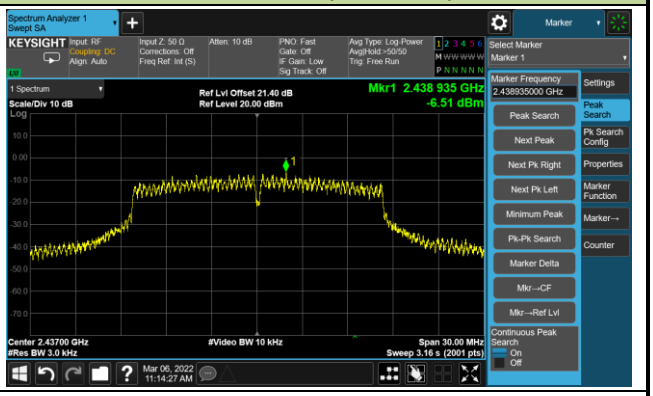
Channel 11 (2462MHz)	
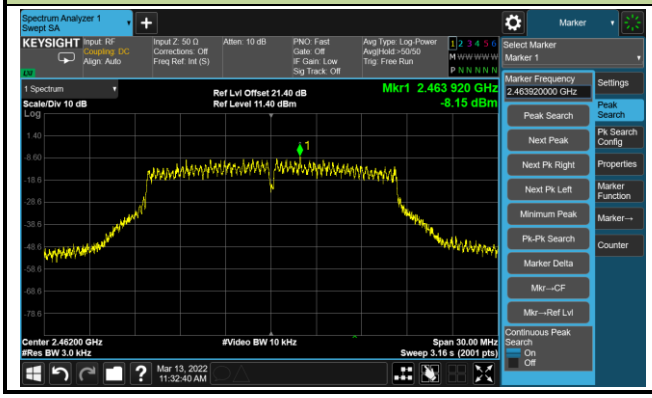	

802.11n-HT20 - PKPSD	
Channel 01 (2412MHz)	Channel 06 (2437MHz)
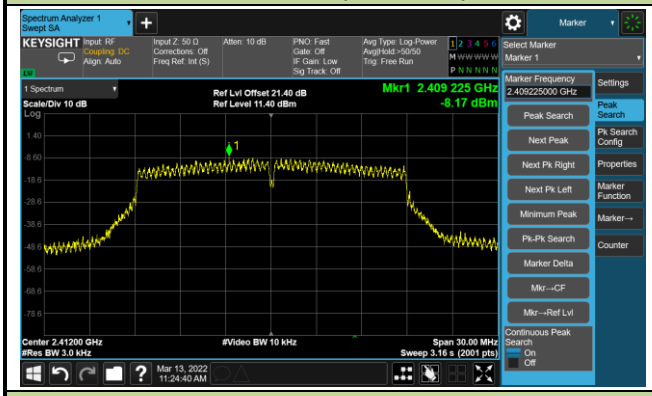	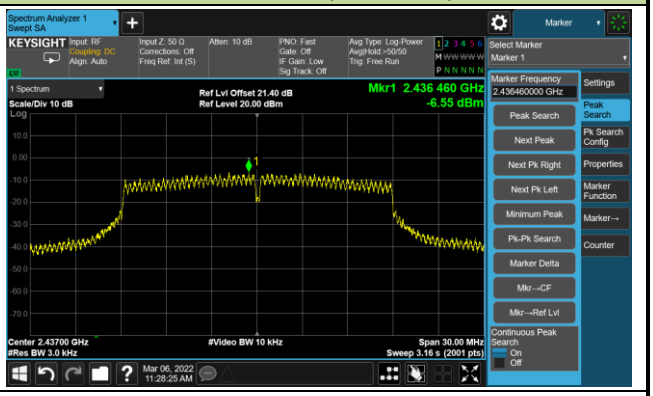
Channel 11 (2462MHz)	
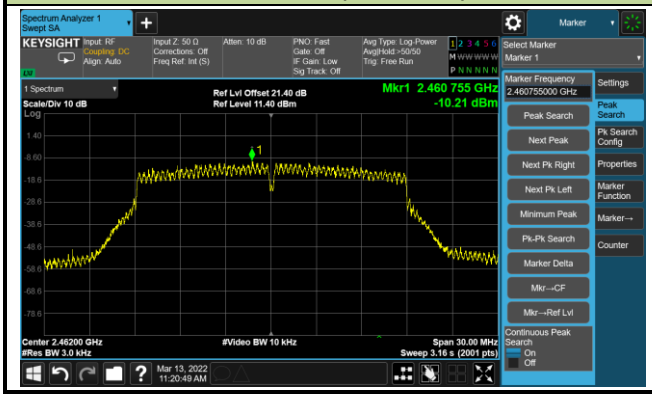	

A.5 Conducted Band Edge and Out-of-Band Emissions Test Result

Test Site	SIP-TR2	Test Engineer	Alisa Deng
Test Date	2022/03/06 ~ 2022/03/13		

Test Mode	Data Rate / MCS	Channel No.	Frequency (MHz)	Limit
11b	11Mbps	01	2412	20dBc
11b	11Mbps	06	2437	20dBc
11b	11Mbps	11	2462	20dBc
11g	6Mbps	01	2412	20dBc
11g	6Mbps	06	2437	20dBc
11g	6Mbps	11	2462	20dBc
11n-HT20	MCS0	01	2412	20dBc
11n-HT20	MCS0	06	2437	20dBc
11n-HT20	MCS0	11	2462	20dBc

802.11b Out-of-Band Emissions

Channel 01 (2412MHz)

Reference Level

Low Band Edge

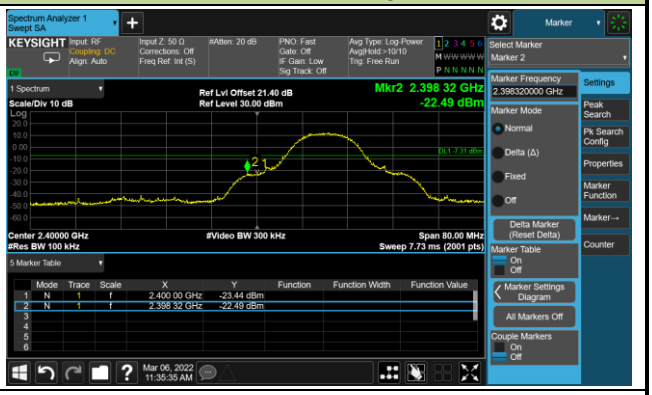

Spurious Emission

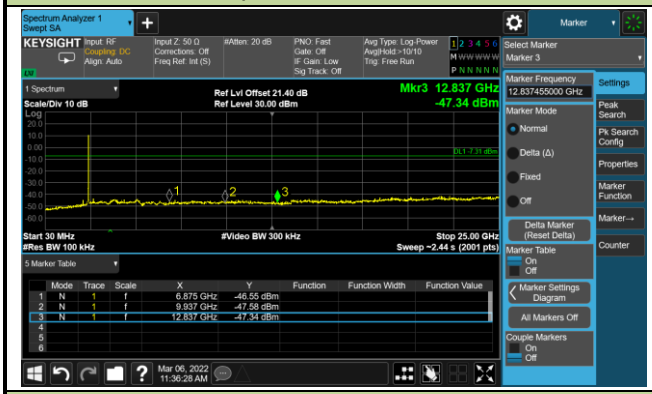

Channel 06 (2437MHz)

Reference Level

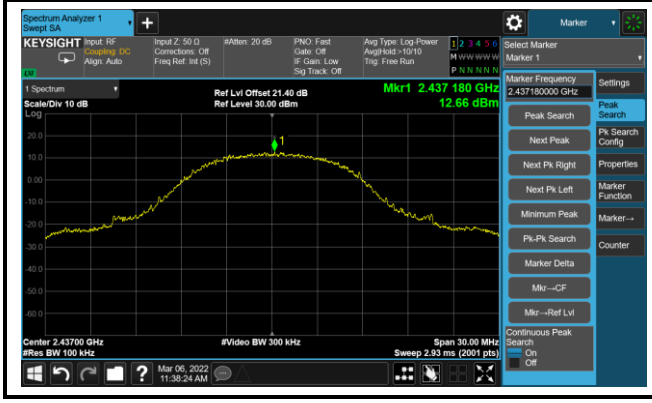

Spurious Emission

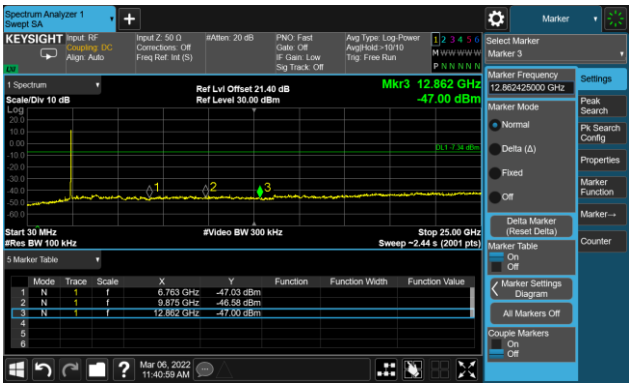

Channel 11 (2462MHz)	
Reference Level	High Band Edge
Spurious Emission	
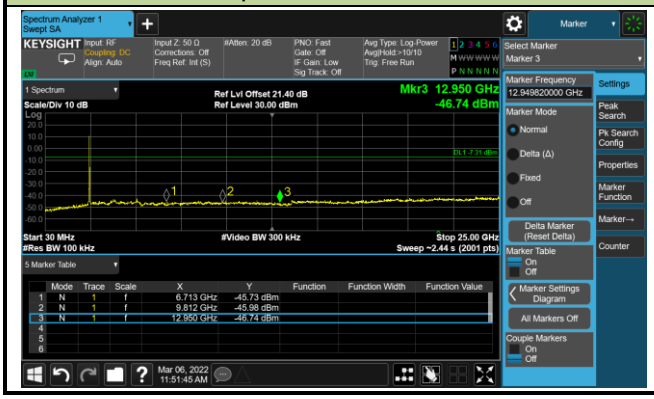	

802.11g Out-of-Band Emissions

Channel 01 (2412MHz)

Reference Level

Low Band Edge

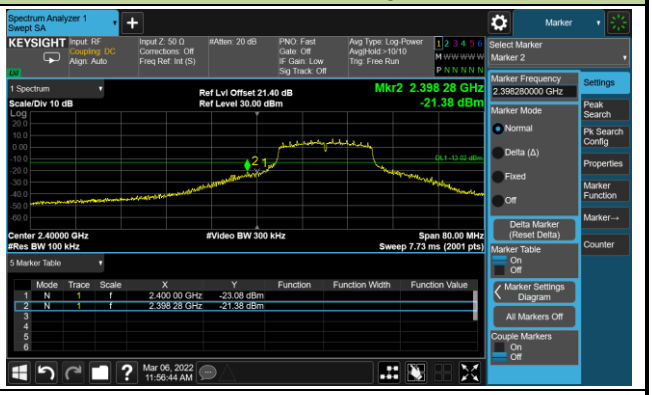

Spurious Emission

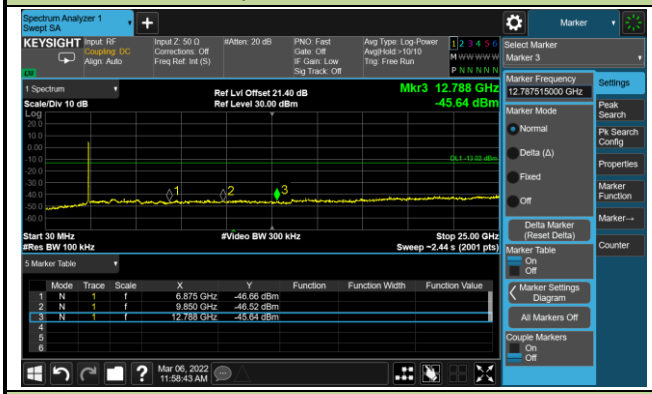

Channel 06 (2437MHz)

Reference Level

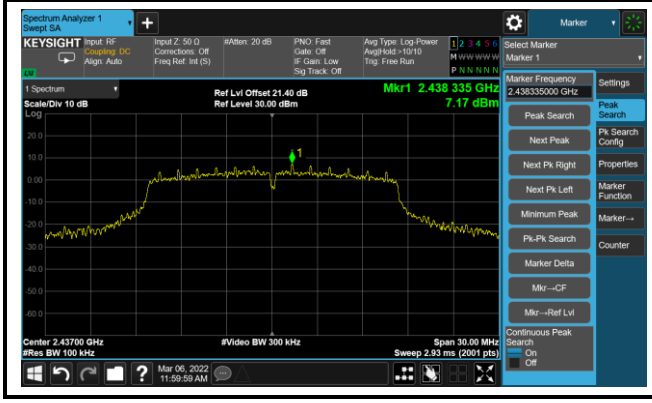
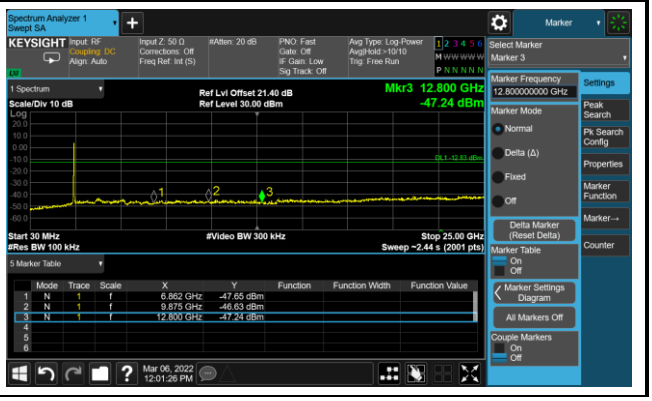
Spurious Emission