RF MEASUREMENT REPORT

FCC ID:	2ATH6-AVG20WF5
Applicant:	AltumView Systems Inc.
Product:	AltumView Sentinare 2 Smart Activity Sensor
Model No.:	AVG2-0WF5
Brand Name:	AltumView
FCC Classification:	FCC Part 15 Spread Spectrum Transmitter (DSS)
FCC Rule Part(s):	Part15 Subpart C (Section 15.247)
Test Date:	March 11 ~ April 11, 2022
Test Result:	Complies

Reviewed By: Sunny Sun

Approved By: Robin Wu

The test results relate only to the samples tested.
The test results shown in the test report are traceable to the national/international standards through the calibration of the equipment and evaluated measurement uncertainty herein.
The test report shall not be reproduced except in full without the written approval of MRT Technology (Suzhou) Co., Ltd.

Revision History

Report No.	Version	Description	Issue Date	Note
2202RSU032-U2	Rev. 01	Initial Report	05-07-2022	Valid

CONTENTS

Description Page

1. General Information 6

1.1. Applicant 6

1.2. Manufacturer 6

1.3. Testing Facility 6

1.4. Product Information 7

1.5. Radio Specification 7

1.6. Working Frequencies 8

1.7. Pseudorandom Frequency Hopping Sequence 9

2. Test Configuration 10

2.1. Test Mode 10

2.2. Test System Connection Diagram 10

2.3. Test Software 10

2.4. Applied Standards 11

2.5. Test Environment Condition 11

3. Antenna Requirement 12

4. Measuring Instrument 13

5. Measurement Uncertainty 14

6. Test Result 15

6.1. Summary 15

6.2. Occupied Bandwidth Measurement 16

6.2.1. Test Limit 16

6.2.2. Test Procedure 16

6.2.3. Test Setting 16

6.2.4. Test Setup 16

6.2.5. Test Result 16

6.3. Output Power Measurement 17

6.3.1. Test Limit 17

6.3.2. Test Procedure 17

6.3.3. Test Setting 17

6.3.4. Test Setup 17

6.3.5. Test Result 17

6.4. Carrier Frequency Separation Measurement 18

6.4.1. Test Limit 18

6.4.2. Test Procedure 18

6.4.3. Test Setting 18

6.4.4. Test Setup 18

6.4.5. Test Result 18
6.5. Number of Hopping Channels Measurement 19
6.5.1. Test Limit 19
6.5.2. Test Procedure 19
6.5.3. Test Settitng 19
6.5.4. Test Setup 19
6.5.5. Test Result 19
6.6. Time of Occupancy Measurement 20
6.6.1. Test Limit 20
6.6.2. Test Procedure 20
6.6.3. Test Settitng 20
6.6.4. Test Setup 20
6.6.5. Test Result 21
6.7. Band-edge Compliance Measurement 22
6.7.1. Test Limit 22
6.7.2. Test Procedure 22
6.7.3. Test Setting 22
6.7.4. Test Setup 23
6.7.5. Test Result 23
6.8. Conducted Spurious Emissions Measurement 24
6.8.1. Test Limit 24
6.8.2. Test Procedure 24
6.8.3. Test Setting 24
6.8.4. Test Setup 25
6.8.5. Test Result 25
6.9. Radiated Spurious Emission Measurement 26
6.9.1. Test Limit 26
6.9.2. Test Procedure 26
6.9.3. Test Setting 26
6.9.4. Test Setup 28
6.9.5. Test Result 28
6.10. Radiated Restricted Band Edge Measurement 29
6.10.1. Test Limit 29
6.10.2. Test Procedure 30
6.10.3. Test Setting 30
6.10.4. Test Setup 31
6.10.5. Test Result 31
6.11. AC Conducted Emissions Measurement 32
6.11.1. Test Limit 32

6.11.2. Test Setup 32
6.11.3. Test Result 32
Appendix A - Test Result 33
A.1 Duty Cycle Test Result 33
A.2 20dB Bandwidth Test Result 34
A.3 Output Power Test Result 38
A.4 Carrier Frequency Separation Test Result 42
A.5 Number of Hopping Channels Test Result 46
A.6 Time of Occupancy Test Result 49
A.7 Band-edge Compliance Test Result 52
A.8 Conducted Spurious Emissions Test Result 55
A.9 Radiated Spurious Emission Test Result 59
A.10 Radiated Restricted Band Edge Test Result 64
A.11 AC Conducted Emissions Test Result 88
Appendix B - Test Setup Photograph 90
Appendix C - EUT Photograph 91

1. General Information

1.1. Applicant

AltumView Systems Inc.

#223-3989 Henning Drive, Burnaby, BC, V5C 6P8, Canada

1.2. Manufacturer

AltumView Systems Inc.

#223-3989 Henning Drive, Burnaby, BC, V5C 6P8, Canada

1.3. Testing Facility

☒	**Test Site – MRT Suzhou Laboratory**				
	Laboratory Location (Suzhou - Wuzhong) D8 Building, No.2 Tian'edang Rd., Wuzhong Economic Development Zone, Suzhou, China **Laboratory Location (Suzhou - SIP)** 4b Building, Liando U Valley, No.200 Xingpu Rd., Shengpu Town, Suzhou Industrial Park, China				
	Laboratory Accreditations				
	A2LA: 3628.01		CNAS: L10551		
	FCC: CN1166		ISED: CN0001		
	VCCI:	☐R-20025	☐G-20034	☐C-20020	☐T-20020
		☐R-20141	☐G-20134	☐C-20103	☐T-20104
☐	**Test Site – MRT Shenzhen Laboratory**				
	Laboratory Location (Shenzhen) 1G, Building A, Junxiangda Building, Zhongshanyuan Road West, Nanshan District, Shenzhen, China				
	Laboratory Accreditations				
	A2LA: 3628.02		CNAS: L10551		
	FCC: CN1284		ISED: CN0105		
☐	**Test Site – MRT Taiwan Laboratory**				
	Laboratory Location (Taiwan) No. 38, Fuxing 2nd Rd., Guishan Dist., Taoyuan City 333, Taiwan (R.O.C.)				
	Laboratory Accreditations				
	TAF: L3261-190725				
	FCC: 291082, TW3261		ISED: TW3261		

1.4. Product Information

Product Name	AltumView Sentinare 2 Smart Activity Sensor
Model No.	AVG2-0WF5
Brand Name	AltumView
Serial No.	20220217Sample#05, 20220408Sample#02
Wi-Fi Specification	802.11a/b/g/n
Bluetooth Version	V5.0 single mode, BR/EDR
Antenna Information	Refer to section 1.5

Remark:

1. The information of EUT was provided by the manufacturer, and the accuracy of the information shall be the responsibility of the manufacturer.

1.5. Radio Specification

Operating Frequency	2402~2480MHz
Channel Number	79
Type of modulation	GFSK, Pi/4 DQPSK, 8DPSK
Data Rate	1Mbps, 2Mbps, 3Mbps
Antenna Specification	PCB Antenna, 2.24dBi

Note:

1. For other features of this EUT, test report will be issued separately.
2. The test data contained in this report pertains only to the emissions due to the EUT's Bluetooth transmitter.

- 15.247(g): In accordance with the Bluetooth Industry Standard, the system is designed to comply with all of the regulations in Section 15.247 when the transmitter is presented with a continuous data (or information) system.
- 15.247(h): In accordance with the Bluetooth Industry Standard, the system does not coordinate its channels selection/ hopping sequence with other frequency hopping systems for the express purpose of avoiding the simultaneous occupancy of individual hopping frequencies by multiple transmitters.
- 15.247(h): The EUT employs Adaptive Frequency Hopping (AFH) which identifies sources of interference namely devices operating in 802.11 WLAN and excludes them from the list of available channels. The process of re-mapping reduces the number of test channels from 79 channels to a minimum number of 20 channels.

1.6. Working Frequencies

Channel	Frequency	Channel	Frequency	Channel	Frequency
00	2402 MHz	01	2403 MHz	02	2404 MHz
03	2405 MHz	04	2406 MHz	05	2407 MHz
06	2408 MHz	07	2409 MHz	08	2410 MHz
09	2411 MHz	10	2412 MHz	11	2413 MHz
12	2414 MHz	13	2415 MHz	14	2416 MHz
15	2417 MHz	16	2418 MHz	17	2419 MHz
18	2420 MHz	19	2421 MHz	20	2422 MHz
21	2423 MHz	22	2424 MHz	23	2425 MHz
24	2426 MHz	25	2427 MHz	26	2428 MHz
27	2429 MHz	28	2430 MHz	29	2431 MHz
30	2432 MHz	31	2433 MHz	32	2434 MHz
33	2435 MHz	34	2436 MHz	35	2437 MHz
36	2438 MHz	37	2439 MHz	38	2440 MHz
39	2441 MHz	40	2442 MHz	41	2443 MHz
42	2444 MHz	43	2445 MHz	44	2446 MHz
45	2447 MHz	46	2448 MHz	47	2449 MHz
48	2450 MHz	49	2451 MHz	50	2452 MHz
51	2453 MHz	52	2454 MHz	53	2455 MHz
54	2456 MHz	55	2457 MHz	56	2458 MHz
57	2459 MHz	58	2460 MHz	59	2461 MHz
60	2462 MHz	61	2463 MHz	62	2464 MHz
63	2465 MHz	64	2466 MHz	65	2467 MHz
66	2468 MHz	67	2469 MHz	68	2470 MHz
69	2471 MHz	70	2472 MHz	71	2473 MHz
72	2474 MHz	73	2475 MHz	74	2476 MHz
75	2477 MHz	76	2478 MHz	77	2479 MHz
78	2480 MHz	-	-	-	-

1.7. Pseudorandom Frequency Hopping Sequence

The pseudorandom sequence may be generated in a nine-stage shift register whose 5th and 9th stage outputs are added in a modulo-two addition stage. And the result is fed back to the input of the first stage. The sequence begins with the first ONE of 9 consecutive ONEs; i.e. the shift register is initialized with nine ones.

- Number of shift register stages: 9
- Length of pseudo-random sequence: $2^9 - 1 = 511$ bits
- Longest sequence of zeros: 8 (non-inverted signal)

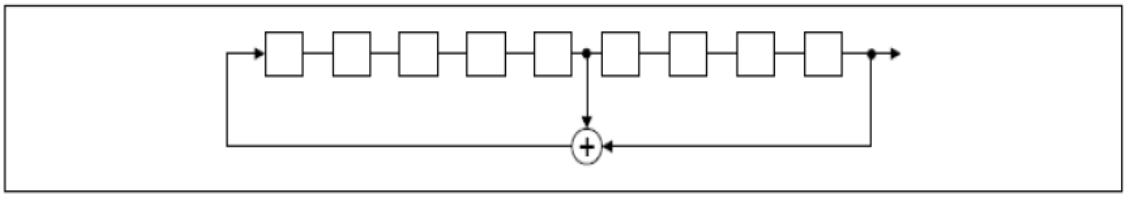

Linear Feedback Shift Register for Generation of the PRBS sequence

An example of Pseudorandom Frequency Hopping Sequence as follow:

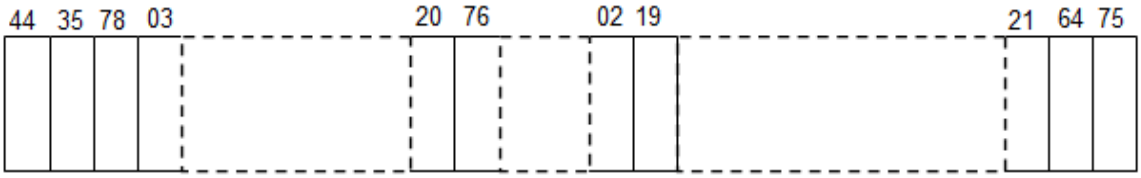

Each frequency used equally on the average by each transmitter.

The system receivers have input bandwidths that match the hopping channel bandwidths of their Corresponding transmitters and shift frequencies in synchronization with the transmitted signals.

2. Test Configuration

2.1. Test Mode

Mode 1: Transmit by DH5
Mode 2: Transmit by 2DH5
Mode 3: Transmit by 3DH5

2.2. Test System Connection Diagram

The device was tested per the guidance ANSI C63.10: 2013 was used to reference the appropriate EUT setup for radiated emissions testing and AC line conducted testing.

Connection Diagram

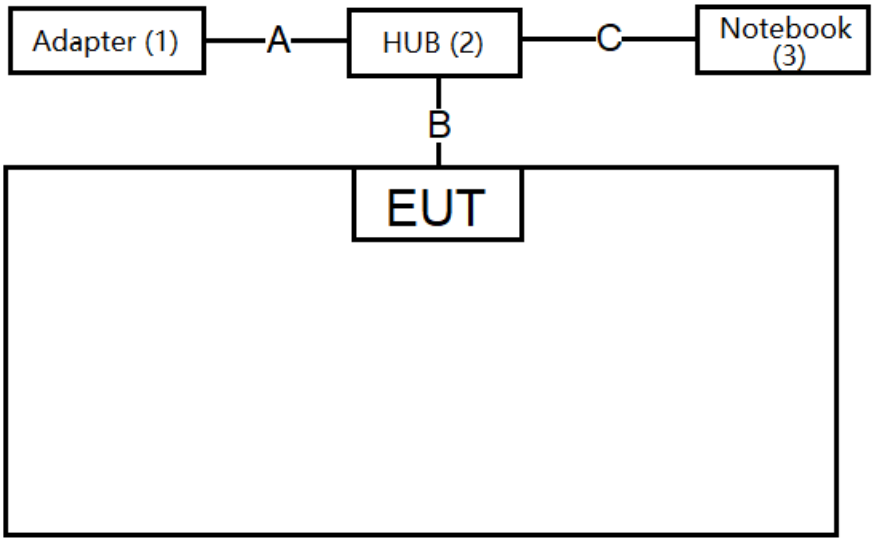

Cable Type		Cable Description
A	Power Cable	Non shielded, 1.5m
B	USB Cable	Shielding, 1.5m
C	USB Cable	Shielding, 0.2m

Product		Manufacturer	Model No.
1	Adapter	Shenzhen CHANZEHO	CZJ024050200USWH
2	HUB	Manhattan	161039
3	Notebook (for RF Test)	HP	HP 24-df052wcn

2.3. Test Software

The test utility software used during testing was “ADB”.

2.4. Applied Standards

According to the specifications of the manufacturer, the EUT must comply with the requirements of the following standards:

- FCC Part 15.247
- KDB 558074 D01v05r02
- ANSI C63.10-2013

2.5. Test Environment Condition

Ambient Temperature	15 ~ 35 °C
Relative Humidity	20 ~75 %RH

3. Antenna Requirement

Excerpt from §15.203 of the FCC Rules/Regulations:

"An intentional radiator antenna shall be designed to ensure that no antenna other than that furnished by the responsible party can be used with the device. The use of a permanently attached antenna or of an antenna that uses a unique coupling to the intentional radiator shall be considered sufficient to comply with the provisions of this section."

- The antenna of the device is **permanently attached.**
- There are no provisions for connection to an external antenna.

Conclusion:

The unit complies with the requirement of §15.203.

4. Measuring Instrument

Instrument	Manufacturer	Model No.	Asset No.	Cali. Interval	Cali. Due Date	Test Site
Horn Antenna	Schwarzbeck	BBHA 9170	MRTSUE06599	1 year	2022/10/20	SIP-AC2
Horn Antenna	Schwarzbeck	BBHA 9120D	MRTSUE06648	1 year	2022/11/9	SIP-AC2
Anechoic Chamber	RIKEN	SIP-AC2	MRTSUE06781	1 year	2022/12/23	SIP-AC2
Loop Antenna	Schwarzbeck	FMZB 1519 B	MRTSUE06937	1 year	2023/3/14	SIP-AC2
TRILOG Antenna	Schwarzbeck	VULB 9168	MRTSUE06647	1 year	2022/8/5	SIP-AC2
Preamplifier	EMCI	EMC184045SE	MRTSUE06602	1 year	2022/10/11	SIP-AC2
Preamplifier	EMCI	EMC051845SE	MRTSUE06644	1 year	2022/11/8	SIP-AC2
EMI Test Receiver	R&S	ESR3	MRTSUE06613	1 year	2022/6/24	SIP-AC2
Thermohygrometer	testo	608-H1	MRTSUE06623	1 year	2022/11/28	SIP-AC2
Thermohygrometer	testo	608-H1	MRTSUE06624	1 year	2022/11/28	SIP-AC2
Signal Analyzer	Keysight	N9010B	MRTSUE06603	1 year	2022/10/31	SIP-AC2
Two-Line V-Network	R&S	ENV216	MRTSUE06003	1 year	2022/6/8	SIP-SR2
ISN	R&S	ENY81	MRTSUE06608	1 year	2022/6/7	SIP-SR2
ISN	R&S	ENY81-CA6	MRTSUE06609	1 year	2022/6/7	SIP-SR2
EMI Test Receiver	R&S	ESR3	MRTSUE06612	1 year	2022/6/24	SIP-SR2
Four-Line V-Network	R&S	ENV432	MRTSUE06614	1 year	2022/10/10	SIP-SR2
CDNE	Schwarzbeck	CDNE M2	MRTSUE06934	1 year	2023/2/27	SIP-SR2
CDNE	Schwarzbeck	CDNE M3	MRTSUE06935	1 year	2023/2/27	SIP-SR2
50 Ω to 150 Ω Adapter	Schwarzbeck	SR100-6W	MRTSUE06936	1 year	2023/2/27	SIP-SR2
Shielding Room	MIX-BEP	SIP-SR2	MRTSUE06949	/	/	SIP-SR2
USB Power Sensor	Keysight	U8489A	MRTSUE06448	/	/	SIP-TR2
Thermohygrometer	testo	622	MRTSUE06628	1 year	2023/1/6	SIP-TR2
Temperature Chamber	BAOYT	BYG-408CS	MRTSUE06847	1 year	2023/2/22	SIP-TR1

Software	Version	Function
EMI Software	V3.0.0	EMI Test Software

5. Measurement Uncertainty

Where relevant, the following test uncertainty levels have been estimated for tests performed on the EUT as specified in CISPR 16-4-2. This uncertainty represents an expanded uncertainty expressed at approximately the 95% confidence level using a coverage factor of k = 2.

AC Conducted Emission Measurement
Measurement Uncertainty for a Level of Confidence of 95% (U=2Uc(y)): 9kHz~150kHz: 3.74dB 150kHz~30MHz: 3.44dB
Radiated Disturbance
Measurement Uncertainty for a Level of Confidence of 95% (U=2Uc(y)): Horizontal: 30MHz~300MHz: 5.04dB 300MHz~1GHz: 4.95dB 1GHz~40GHz: 6.40dB Vertical: 30MHz~300MHz: 5.24dB 300MHz~1GHz: 6.03dB 1GHz~40GHz: 6.40dB
Spurious Emissions, Conducted
Measuring Uncertainty for a Level of Confidence of 95% (U=2Uc(y)): 0.78dB
Output Power
Measuring Uncertainty for a Level of Confidence of 95% (U=2Uc(y)): 1.13dB
Occupied Bandwidth
Measuring Uncertainty for a Level of Confidence of 95% (U=2Uc(y)): 0.28%

6. Test Result

6.1. Summary

FCC Section(s)	Test Description	Test Condition	Verdict
15.247(a)(1)	20dB Bandwidth	Conducted	Pass
15.247(b)(1)	Peak Transmitter Output Power		Pass
15.247(a)(1)	Channel Separation		Pass
15.247(a)(1)(iii)	Number of Channels		Pass
15.247(a)(1)(iii)	Time of Occupancy		Pass
15.247(d)	Band Edge / Out- of-Band Emissions		Pass
15.205, 15.209	General Field Strength (Restricted Bands and Radiated Emission)	Radiated	Pass
15.207	AC Conducted Emissions 150kHz - 30MHz	Line Conducted	Pass

Remark:

1. The analyzer plots shown in this section were all taken with a correction table loaded into the analyzer. The correction table was used to account for the losses of the cables and attenuators used as part of the system to connect the EUT to the analyzer at all frequencies of interest.
2. All modes of operation and data rates were investigated. For radiated emission test, every axis (X, Y, Z) was also verified. The test results shown in the following sections represent the worst-case emissions.

6.2. Occupied Bandwidth Measurement

6.2.1. Test Limit

N/A

6.2.2. Test Procedure

ANSI C63.10-2013 - Section 6.9.2 (20dB Bandwidth)

6.2.3. Test Setting

1. Set RBW ≥ 1% to 5% of the 20dB bandwidth
2. VBW = approximately three times RBW
3. Span = approximately 2 to 5 times the 20dB bandwidth, centered on a hopping channel
4. Detector = Peak
5. Trace mode = max hold
6. Sweep = auto couple
7. Allow the trace to stabilize
8. Measure the maximum width of the emission that is constrained by the frequencies associated with the two outermost amplitude points (upper and lower frequencies) that are attenuated by 20 dB relative to the maximum level measured in the fundamental emission.

6.2.4. Test Setup

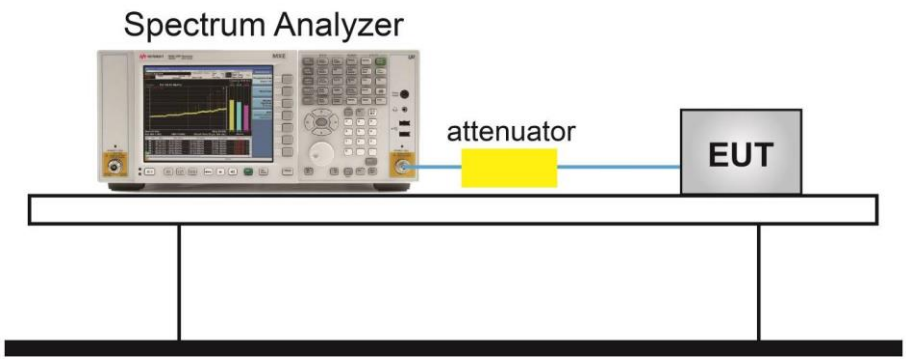

6.2.5. Test Result

Refer to Appendix A.2.

6.3. Output Power Measurement

6.3.1. Test Limit

For frequency hopping systems operating in the 2400-2483.5MHz band employing at least 75 non-overlapping hopping channels: 1watt (30dBm). For all other frequency hopping systems in the 2400 - 2483.5MHz band: 0.125 watt (21dBm).

6.3.2. Test Procedure

ANSI C63.10-2013 - Section 7.8.5

6.3.3. Test Setting

1. Set RBW ≥ the 20 dB bandwidth of the emission being measured.
2. VBW ≥ RBW
3. Span = approximately five times the 20dB bandwidth, centered on a hopping channel
4. Detector = Peak
5. Trace mode = max hold
6. Sweep = auto couple
7. Allow the trace to stabilize, Use the marker-to-peak function to set the marker to the peak of the emission. The indicated level is the peak output power (don't forget added the external attenuation and cable loss)

6.3.4. Test Setup

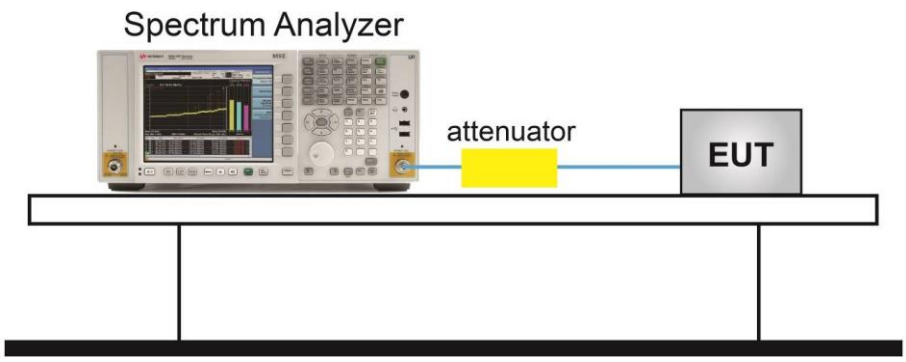

6.3.5. Test Result

Refer to Appendix A.3.

6.4. Carrier Frequency Separation Measurement

6.4.1. Test Limit

The minimum permissible channel separation for this system is 2/3 the value of the 20dB BW.

6.4.2. Test Procedure

ANSI C63.10-2013 - Section 7.8.2.

6.4.3.Test Setting

1. Span = wide enough to capture the peaks of two adjacent channels.
2. Start with the RBW set to approximately 30% of the channel spacing; adjust as necessary to best identify the center of each individual channel.
3. VBW ≥ RBW
4. Sweep time = Auto couple
5. Detector = Peak
6. Trace mode = Max hold
7. Allowed the trace to stabilize
8. Use the marker-delta function to determine the separation between the peaks of the adjacent channels.

6.4.4. Test Setup

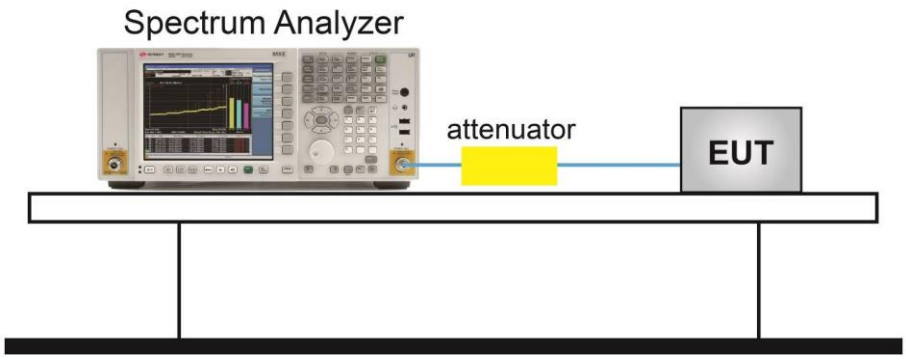

6.4.5. Test Result

Refer to Appendix A.4.

6.5. Number of Hopping Channels Measurement

6.5.1. Test Limit

This frequency hopping system must employ a minimum of 15 hopping channels.

6.5.2. Test Procedure

ANSI C63.10-2013 - Section 7.8.3.

6.5.3. Test Settitng

1. Span = the frequency band of operation. Depending on the number of channels the device supports, it may be necessary to divide the frequency range of operation across multiple spans, to allow the individual channels to be clearly seen.
2. To identify clearly the individual channels, set the RBW to less than 30% of the channel spacing or the 20 dB bandwidth, whichever is smaller.
3. VBW ≥ RBW
4. Sweep time = Auto couple
5. Detector = Peak
6. Trace mode = Max hold
7. Allow the trace to stabilize

6.5.4. Test Setup

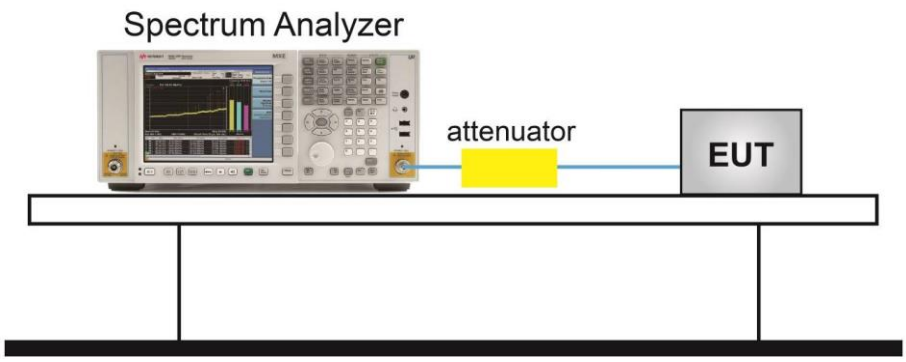

6.5.5. Test Result

Refer to Appendix A.5.

6.6. Time of Occupancy Measurement

6.6.1. Test Limit

The maximum permissible time of occupancy is 400ms within a period of 400ms multiplied by the number of hopping channels employed.

6.6.2. Test Procedure

ANSI C63.10-2013 - Section 7.8.4.

6.6.3. Test Settitng

1. Span = zero span, centered on a hopping channel.
2. RBW shall be ≤ channel spacing and where possible RBW should be set >> 1 / T, where T is the expected dwell time per channel.
3. VBW ≥ RBW
4. Sweep time = as necessary to capture the entire dwell time per hopping channel
5. Detector = Peak
6. Trace mode = max hold
7. Use the marker-delta function to determine the transmit time per hop. If this value varies with different modes of operation (data rate, modulation format, number of hopping channels, etc.), then repeat this test for each variation in transmit time. An oscilloscope may be used instead of a spectrum analyzer. The EUT shall show compliance with the appropriate regulatory limit for the number of hopping channels. A plot of the data shall be included in the test report.

6.6.4. Test Setup

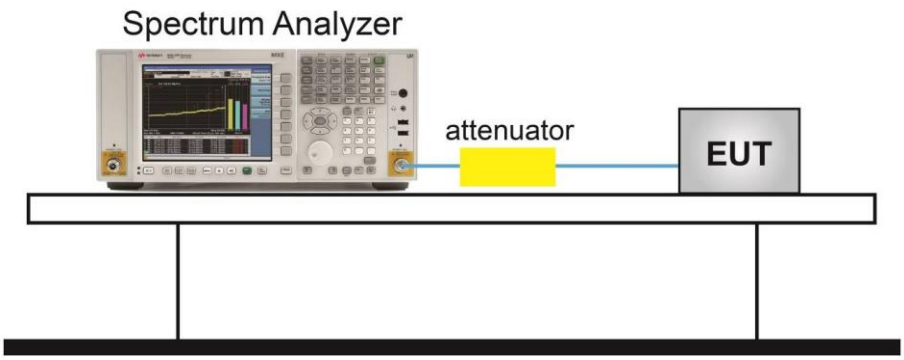

6.6.5. Test Result

Refer to Appendix A.6.

6.7. Band-edge Compliance Measurement

6.7.1. Test Limit

The maximum permissible emission level is 20dBc. Any emissions were lying outside of the emission bandwidth and in authorized band edges to a field strength limit specified in Section 15.209 of the Title 47 CFR.

6.7.2. Test Procedure

ANSI C63.10-2013 - Section 6.10.4.

6.7.3. Test Setting

1. Span = wide enough to capture the peak level of the emission operating on the channel closest to the band edge, as well as any modulation products which fall outside of the authorized band of operation.
2. RBW = 100kHz
3. VBW = 300kHz
4. Detector = peak
5. Sweep time = auto couple
6. Trace mode = max hold
7. Trace was allowed to stabilize
8. Allow the trace to stabilize. Set the marker on the emission at the band edge, or on the highest modulation product outside of the band, if this level is greater than that at the band edge. Enable the marker-delta function, then use the marker-to-peak function to move the marker to the peak of the in-band emission.

6.7.4. Test Setup

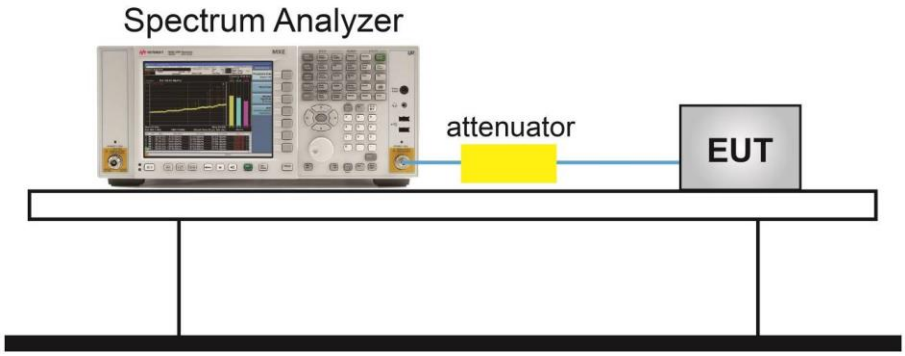

6.7.5. Test Result

Refer to Appendix A.7.

6.8. Conducted Spurious Emissions Measurement

6.8.1. Test Limit

In any 100 kHz bandwidth outside the frequency band in which the spread spectrum or digitally modulated intentional radiator is operating, the radio frequency power that is produced by the intentional radiator shall be at least 20 dB below that in the 100 kHz bandwidth within the band that contains the highest level of the desired power, based on either an RF conducted or a radiated measurement, provided the transmitter demonstrates compliance with the peak conducted or a radiated measurement, provided the transmitter demonstrates compliance with the peak conducted power limits. If the transmitter complies with the conducted power limits based on the use of RMS averaging over a time interval, the attenuation required under this paragraph shall be 30 dB instead of 20 dB.

6.8.2. Test Procedure

ANSI C63.10-2013 - Section 7.8.8.

6.8.3. Test Setting

1. Span = wide enough to capture the peak level of the in-band emission and all spurious emissions (e.g., harmonics) from the lowest frequency generated in the EUT up through the 10th harmonic. Typically, several plots are required to cover this entire span.
2. RBW = 100kHz
3. VBW = 300kHz
4. Detector = peak
5. Sweep time = auto couple
6. Trace mode = max hold
7. Trace was allowed to stabilize
8. Set the marker on the peak of any spurious emission recorded. The level displayed must comply with the limit specified in this section.

6.8.4. Test Setup

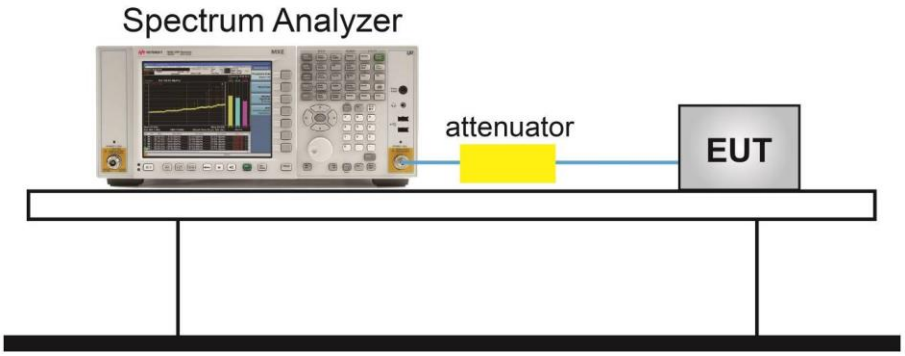

6.8.5. Test Result

Refer to Appendix A.8.

6.9. Radiated Spurious Emission Measurement

6.9.1. Test Limit

All out of band emissions appearing in a restricted band as specified in Section 15.205 of the Title 47 CFR must not exceed the limits shown in Table per Section 15.209.

FCC Part 15 Subpart C Paragraph 15.209		
Frequency [MHz]	Field Strength [uV/m]	Measured Distance [Meters]
0.009 - 0.490	2400/F (kHz)	300
0.490 - 1.705	24000/F (kHz)	30
1.705 - 30	30	30
30 - 88	100	3
88 - 216	150	3
216 - 960	200	3
Above 960	500	3

6.9.2. Test Procedure

ANSI C63.10 Section 6.3 (General Requirements)

ANSI C63.10 Section 6.4 (Standard test method below 30MHz)

ANSI C63.10 Section 6.5 (Standard test method above 30MHz to 1GHz)

ANSI C63.10 Section 6.6 (Standard test method above 1GHz)

6.9.3. Test Setting

Table 1 - RBW as a function of frequency

Frequency	RBW
9 ~ 150 kHz	200 ~ 300 Hz
0.15 ~ 30 MHz	9 ~ 10 kHz
30 ~ 1000 MHz	100 ~ 120 kHz
> 1000 MHz	1 MHz

Quasi-Peak Measurements below 1GHz

1. Analyzer center frequency was set to the frequency of the radiated spurious emission of interest
2. Span was set greater than 1MHz
3. RBW = as specified in Table 1
4. Detector = CISPR quasi-peak
5. Sweep time = auto couple
6. Trace was allowed to stabilize

Peak Measurements above 1GHz

1. Analyzer center frequency was set to the frequency of the radiated spurious emission of interest
2. RBW = 1MHz
3. VBW = 3MHz
4. Detector = peak
5. Sweep time = auto couple
6. Trace mode = max hold
7. Trace was allowed to stabilize

Average Measurements above 1GHz (Method VB)

1. Analyzer center frequency was set to the frequency of the radiated spurious emission of interest
2. RBW = 1MHz
3. VBW; If the EUT is configured to transmit with duty cycle ≥ 98%, set VBW = 10 Hz.

If the EUT duty cycle is < 98%, set VBW ≥ 1/T. T is the minimum transmission duration.

4. Detector = Peak
5. Sweep time = auto
6. Trace mode = max hold
7. Trace was allowed to stabilize

6.9.4. Test Setup

Below 1GHz Test Setup:

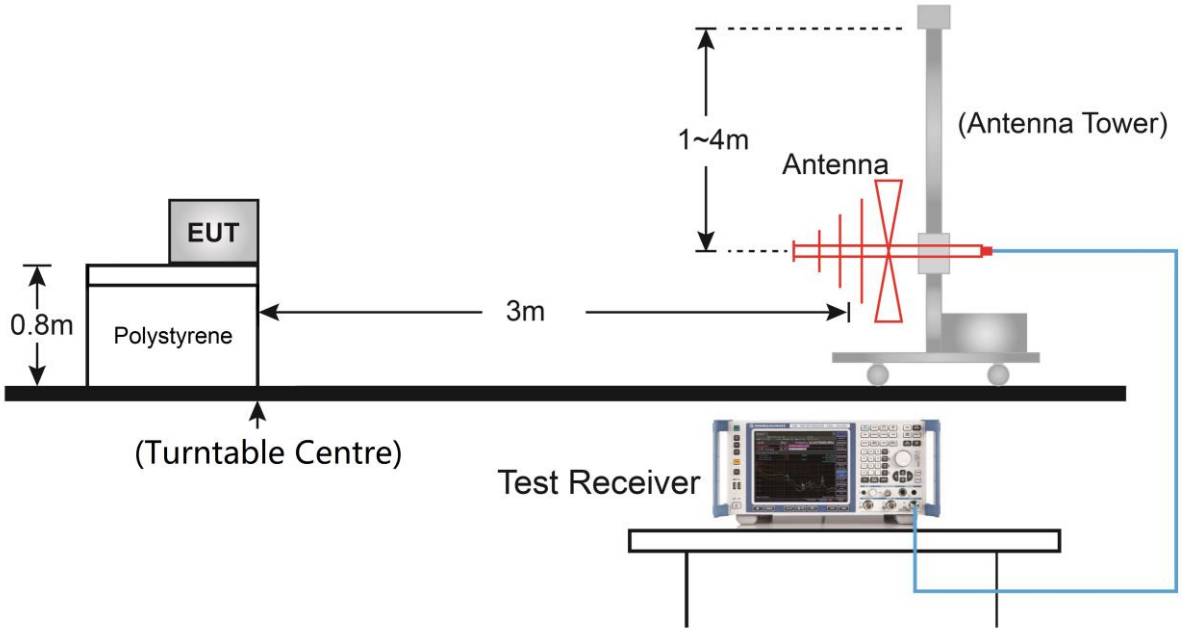

Above 1GHz Test Setup:

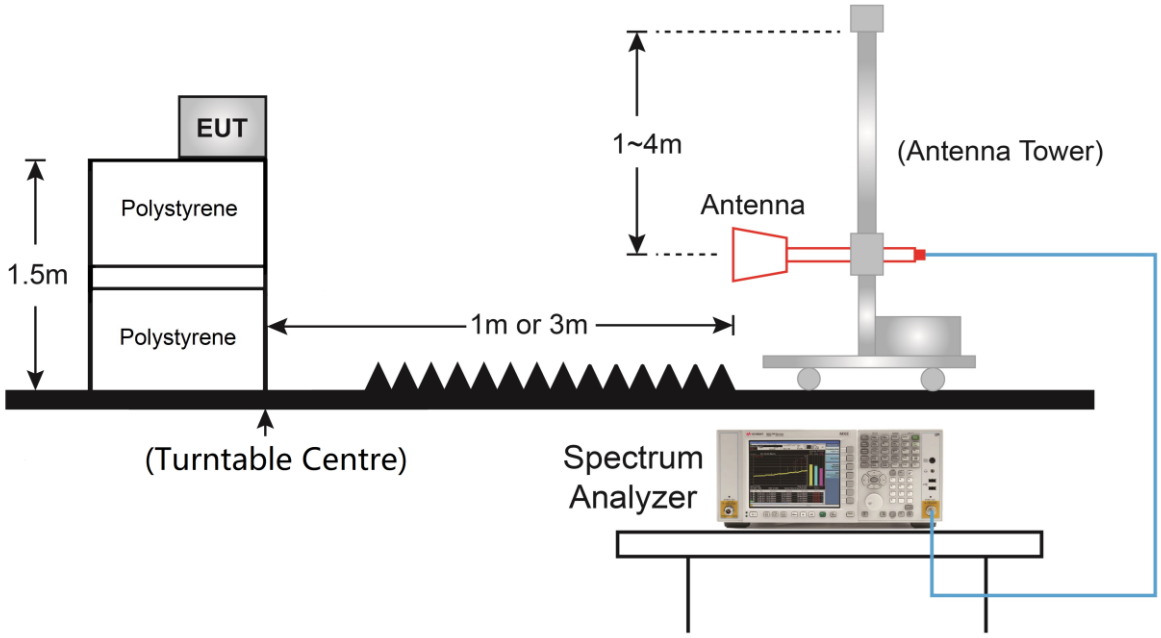

6.9.5. Test Result

Refer to Appendix A.9.

6.10. Radiated Restricted Band Edge Measurement

6.10.1. Test Limit

For 15.205 requirement:

Radiated emissions which fall in the restricted bands, as defined in Section 15.205(a) of FCC part 15, must also comply with the radiated emission limits specified in Section 15.209(a).

Frequency (MHz)	Frequency (MHz)	Frequency (MHz)	Frequency (GHz)
0.090 - 0.110	16.42 - 16.423	399.9 - 410	4.5 - 5.15
[1] 0.495 - 0.505	16.69475 - 16.69525	608 - 614	5.35 - 5.46
2.1735 - 2.1905	16.80425 - 16.80475	960 - 1240	7.25 - 7.75
4.125 - 4.128	25.5 - 25.67	1300 - 1427	8.025 - 8.5
4.17725 - 4.17775	37.5 - 38.25	1435 - 1626.5	9.0 - 9.2
4.20725 - 4.20775	73 - 74.6	1645.5 - 1646.5	9.3 - 9.5
6.215 - 6.218	74.8 - 75.2	1660 - 1710	10.6 - 12.7
6.26775 - 6.26825	108 - 121.94	1718.8 - 1722.2	13.25 - 13.4
6.31175 - 6.31225	123 - 138	2200 - 2300	14.47 - 14.5
8.291 - 8.294	149.9 - 150.05	2310 - 2390	15.35 - 16.2
8.362 - 8.366	156.52475 - 156.525	2483.5 - 2500	17.7 - 21.4
8.37625 - 8.38675	156.7 - 156.9	2690 - 2900	22.01 - 23.12
8.41425 - 8.41475	162.0125 - 167.17	3260 - 3267	23.6 - 24.0
12.29 - 12.293	167.72 - 173.2	3332 - 3339	31.2 - 31.8
12.51975 - 12.52025	240 - 285	3345.8 - 3358	36.43 - 36.5
12.57675 - 12.57725	322 - 335.4	3600 - 4400	([2])
13.36 - 13.41	--	--	--

All out of band emissions appearing in a restricted band as specified in Section 15.205 of the Title 47CFR must not exceed the limits shown in Table per Section 15.209.

FCC Part 15 Subpart C Paragraph 15.209		
Frequency [MHz]	Field Strength [uV/m]	Measured Distance [Meters]
0.009 - 0.490	2400/F (kHz)	300
0.490 - 1.705	24000/F (kHz)	30
1.705 - 30	30	30
30 - 88	100	3
88 - 216	150	3
216 - 960	200	3
Above 960	500	3

6.10.2. Test Procedure

ANSI C63.10 Section 6.3 (General Requirements)

ANSI C63.10 Section 6.6 (Standard test method above 1GHz)

6.10.3. Test Setting

Peak Field Strength Measurements

1. Analyzer center frequency was set to the frequency of the radiated spurious emission of interest
2. RBW = 1MHz
3. VBW = 3MHz
4. Detector = peak
5. Sweep time = auto couple
6. Trace mode = max hold
7. Trace was allowed to stabilize

Average Measurements above 1GHz (Method VB)

1. Analyzer center frequency was set to the frequency of the radiated spurious emission of interest

2. RBW = 1MHz

3. VBW; If the EUT is configured to transmit with duty cycle ≥ 98%, set VBW = 10 Hz.

   If the EUT duty cycle is < 98%, set VBW ≥ 1/T. T is the minimum transmission duration.

4. Detector = Peak

5. Sweep time = auto

6. Trace mode = max hold

7. Trace was allowed to stabilize

6.10.4. Test Setup

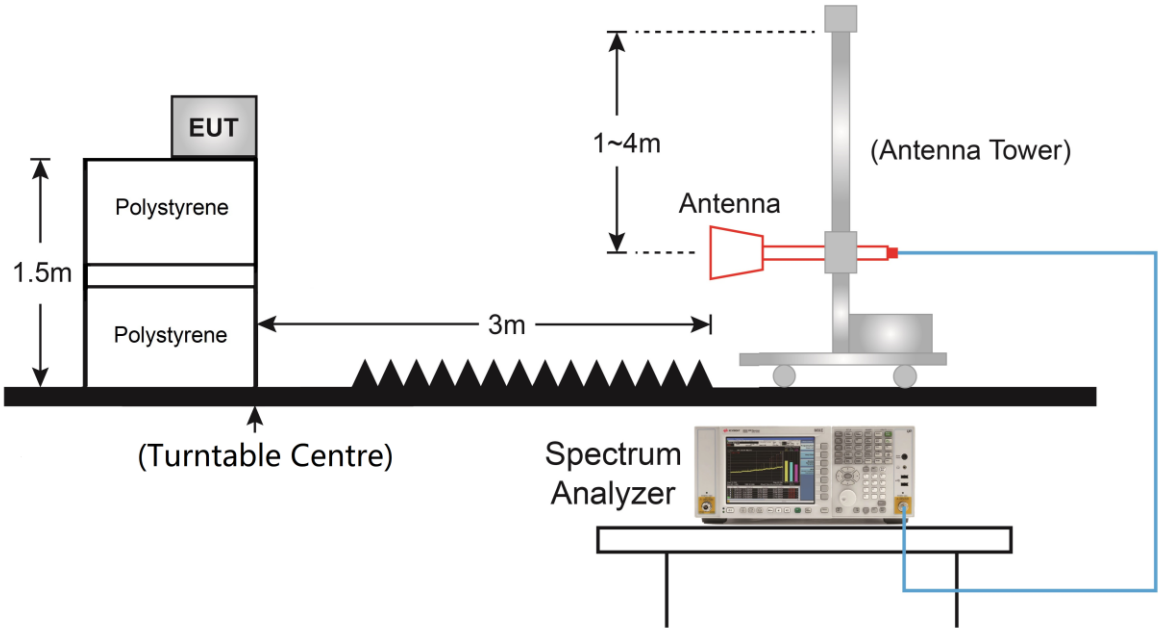

6.10.5. Test Result

Refer to Appendix A.10.

6.11. AC Conducted Emissions Measurement

6.11.1. Test Limit

FCC Part 15 Subpart C Paragraph 15.207 Limits		
Frequency (MHz)	QP (dBμV)	Average (dBμV)
0.15 - 0.50	66 - 56	56 - 46
0.50 - 5.0	56	46
5.0 - 30	60	50
Note 1: The lower limit shall apply at the transition frequencies. Note 2: The limit decreases linearly with the logarithm of the frequency in the range 0.15MHz to 0.5MHz.		

6.11.2. Test Setup

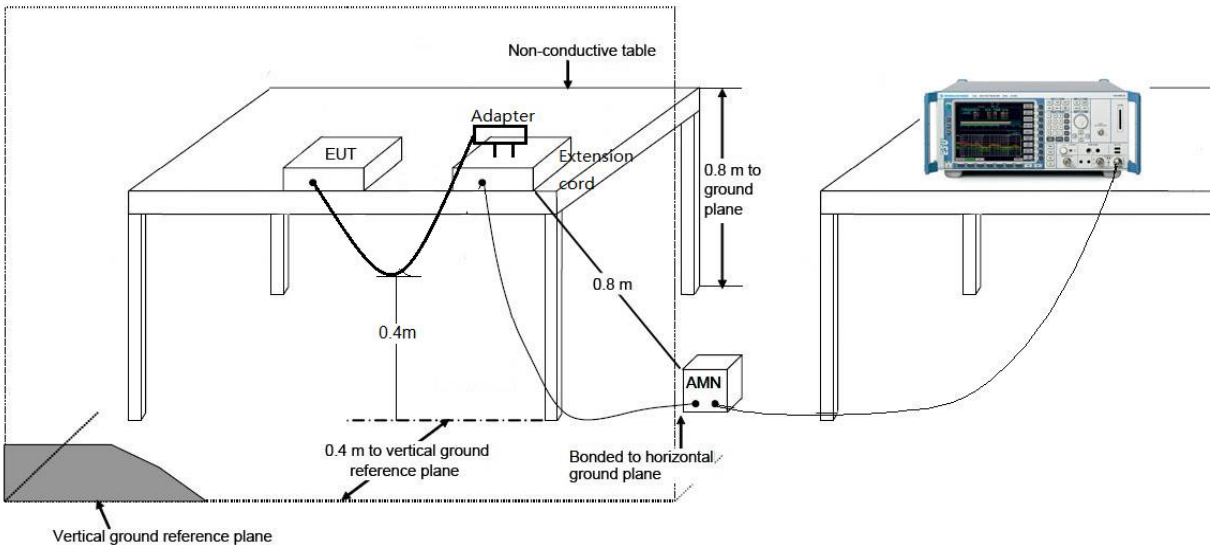

6.11.3. Test Result

Refer to Appendix A.11.

Appendix A - Test Result

A.1 Duty Cycle Test Result

Test Site	SIP-TR2	Test Engineer	Alisa Deng
Test Date	2022/04/08		

Test Mode	Duty Cycle
DH5	76.74%
2DH5	76.80%
3DH5	76.80%

Duty Cycle

DH5 (T = 2.870ms)

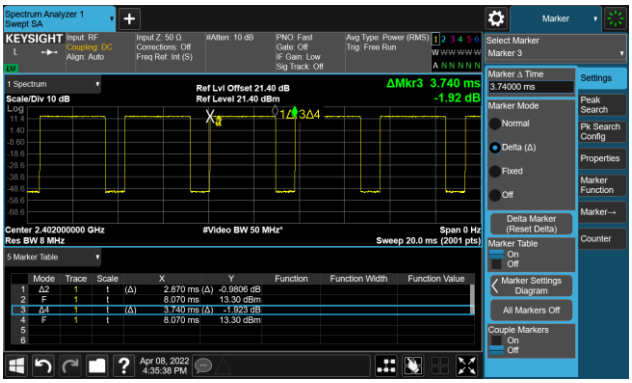

2DH5 (T = 2.880ms)

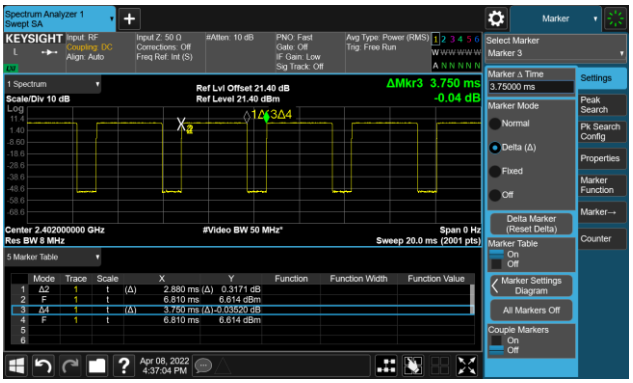

3DH5 (T = 2.880ms)

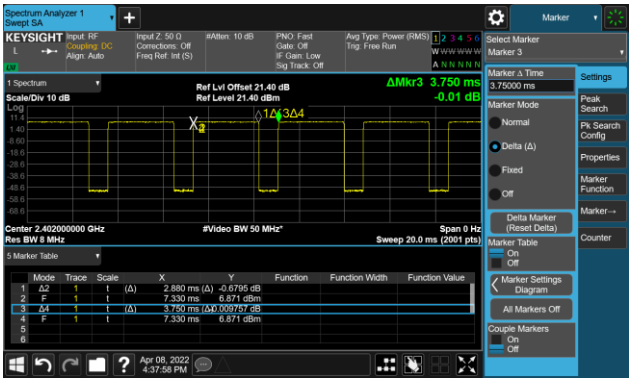

A.2 20dB Bandwidth Test Result

Test Site	SIP-TR2	Test Engineer	Alisa Deng
Test Date	2022/04/08		

Test Mode	Channel No.	Frequency (MHz)	20dB Bandwidth (kHz)	Result
DH5	00	2402	941.8	Pass
DH5	39	2441	985.6	Pass
DH5	78	2480	986.8	Pass
2DH5	00	2402	1319.0	Pass
2DH5	39	2441	1319.0	Pass
2DH5	78	2480	1320.0	Pass
3DH5	00	2402	1297.0	Pass
3DH5	39	2441	1298.0	Pass
3DH5	78	2480	1296.0	Pass

DH5 20dB Bandwidth	
Channel 00 (2402MHz)	Channel 39 (2441MHz)
Channel 78 (2480MHz)	

2DH5 20dB Bandwidth	
Channel 00 (2402MHz)	Channel 39 (2441MHz)
Channel 78 (2480MHz)	
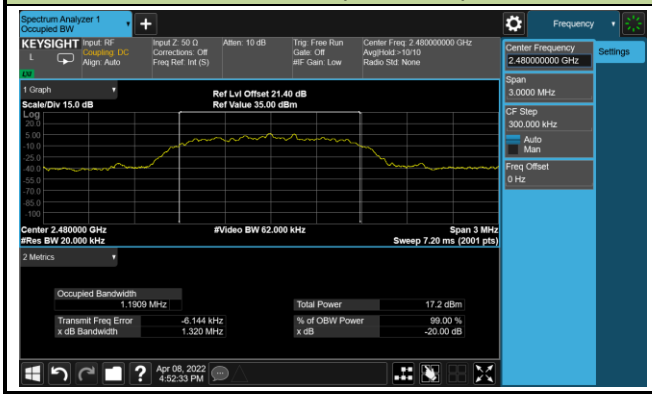	

3DH5 20dB Bandwidth	
Channel 00 (2402MHz)	Channel 39 (2441MHz)
Channel 78 (2480MHz)	
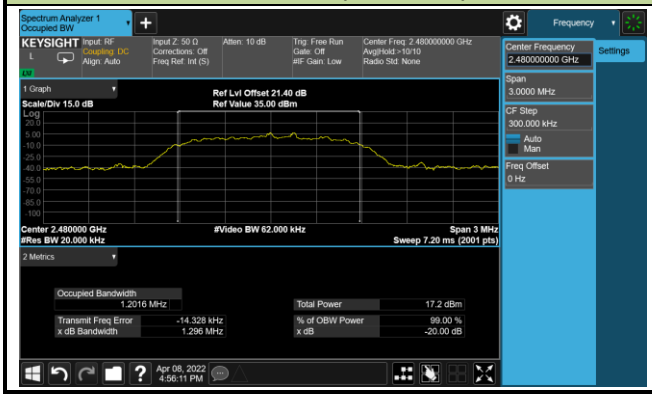	

A.3 Output Power Test Result

Test Site	SIP-TR2	Test Engineer	Alisa Deng
Test Date	2022/04/08		

Test Mode	Channel No.	Frequency (MHz)	Output Power (dBm)	Power Limit (dBm)
DH5	00	2402	14.01	≤ 30
DH5	39	2441	14.98	≤ 30
DH5	78	2480	15.22	≤ 30
2DH5	00	2402	10.31	≤ 30
2DH5	39	2441	11.31	≤ 30
2DH5	78	2480	12.24	≤ 30
3DH5	00	2402	10.57	≤ 30
3DH5	39	2441	11.42	≤ 30
3DH5	78	2480	12.53	≤ 30

DH5 Output Power	
Channel 00 (2402MHz)	Channel 39 (2441MHz)
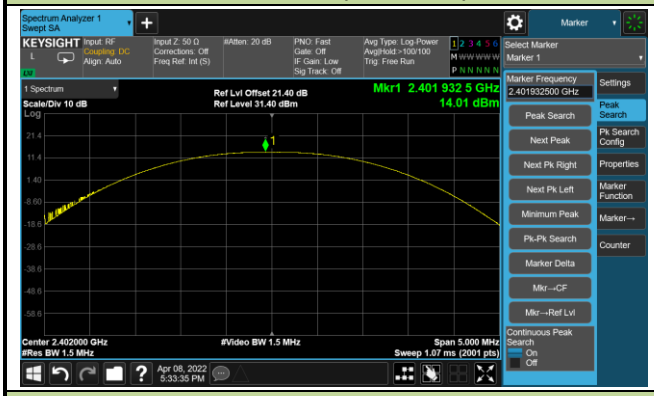	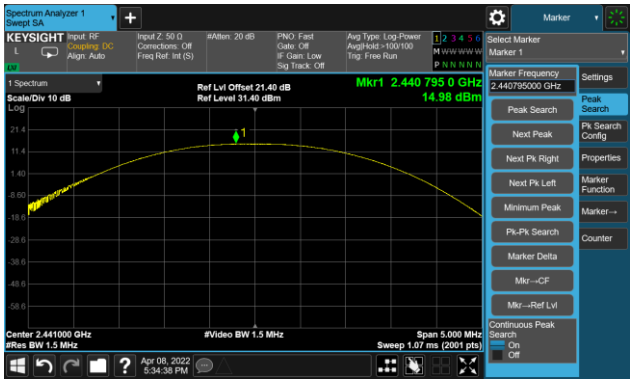
Channel 78 (2480MHz)	
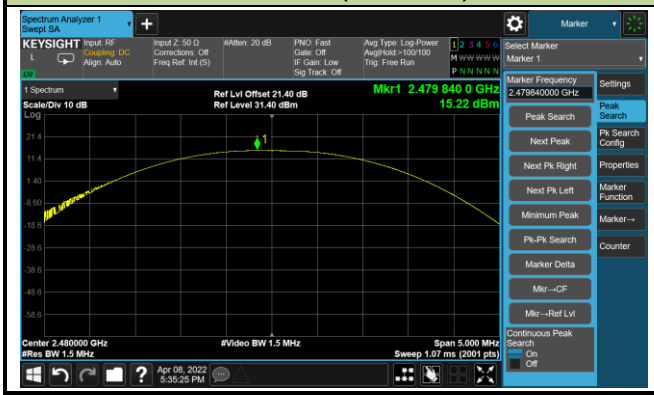	

2DH5 Output Power	
Channel 00 (2402MHz)	Channel 39 (2441MHz)
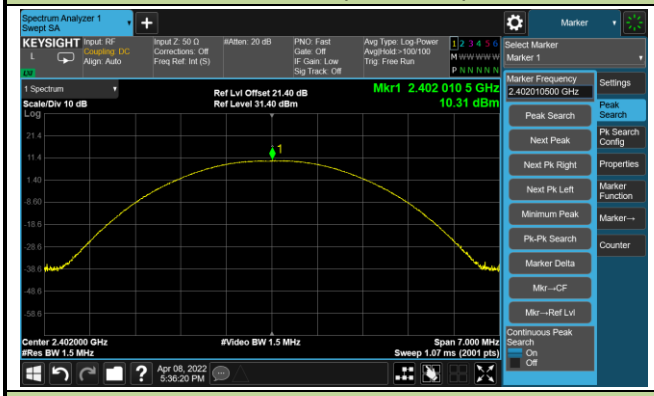	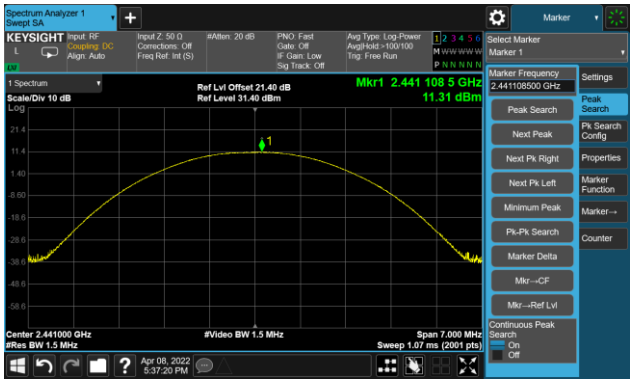
Channel 78 (2480MHz)	
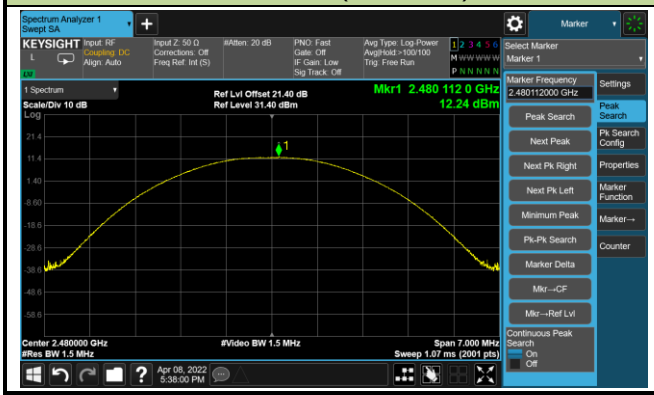	

3DH5 Output Power	
Channel 00 (2402MHz)	Channel 39 (2441MHz)
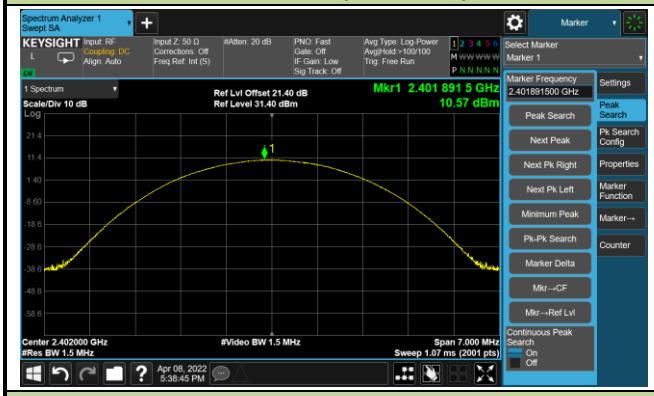	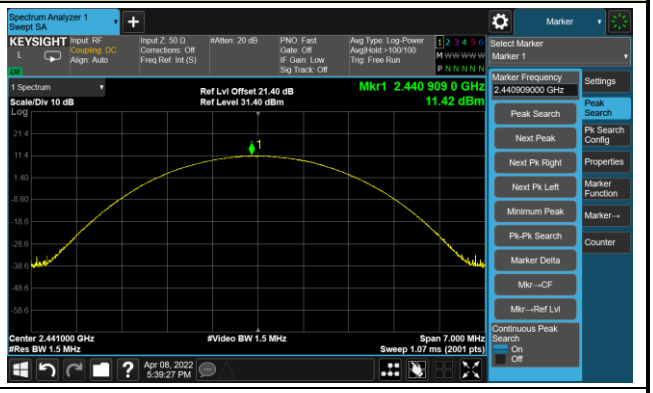
Channel 78 (2480MHz)	
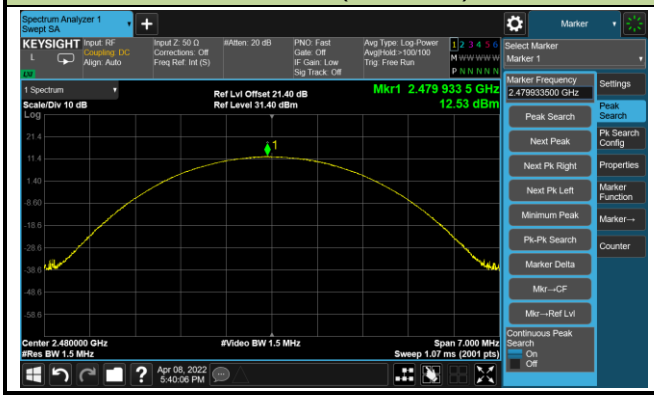	

A.4 Carrier Frequency Separation Test Result

Test Site	SIP-TR2	Test Engineer	Alisa Deng
Test Date	2022/04/10		

Test Mode	Channel No.	Frequency (MHz)	Limit (kHz)	Result
DH5	00	2402	≥ 627.87	Pass
DH5	39	2441	≥ 657.07	Pass
DH5	78	2480	≥ 657.87	Pass
2DH5	00	2402	≥ 879.33	Pass
2DH5	39	2441	≥ 879.33	Pass
2DH5	78	2480	≥ 880.00	Pass
3DH5	00	2402	≥ 864.67	Pass
3DH5	39	2441	≥ 865.33	Pass
3DH5	78	2480	≥ 864.00	Pass

Note: The Limit is 2/3 the value of the 20dB BW.

DH5 Carrier Frequency Separation	
Channel 00 (2402MHz)	Channel 39 (2441MHz)
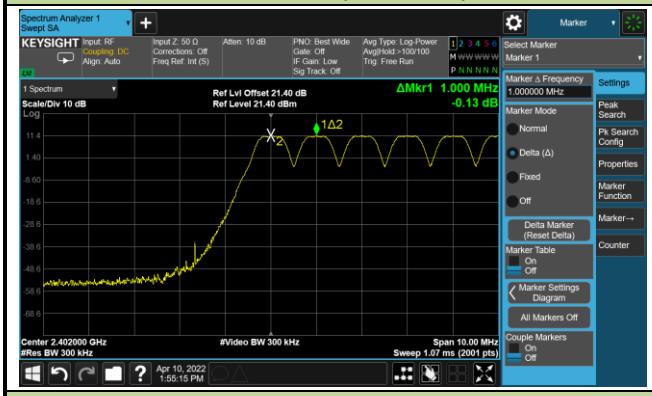	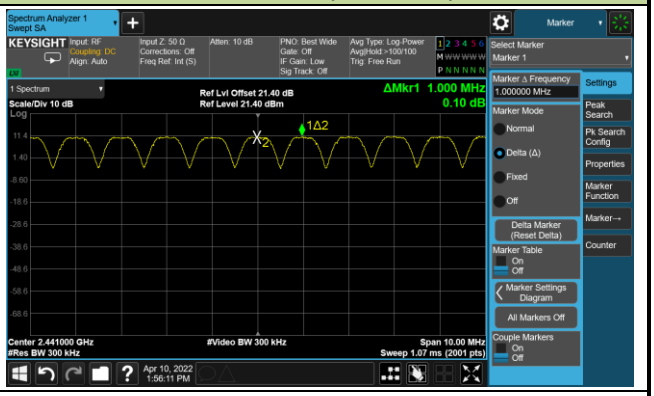
Channel 78 (2480MHz)	
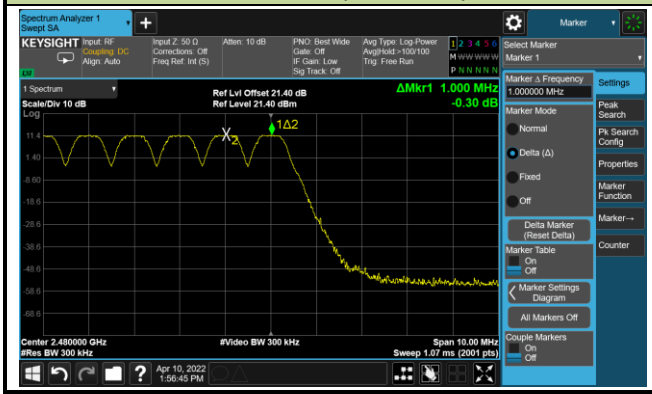	

2DH5 Carrier Frequency Separation	
Channel 00 (2402MHz)	Channel 39 (2441MHz)
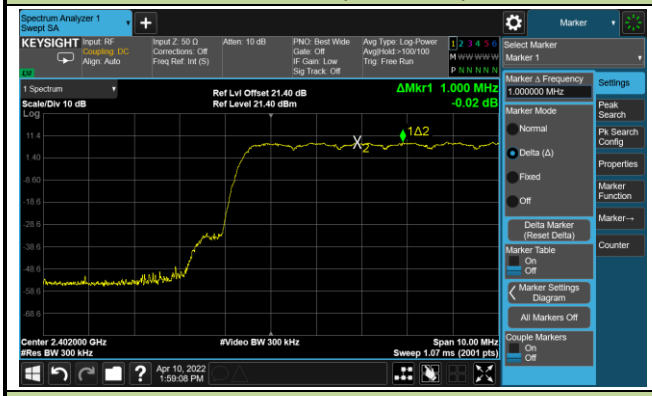	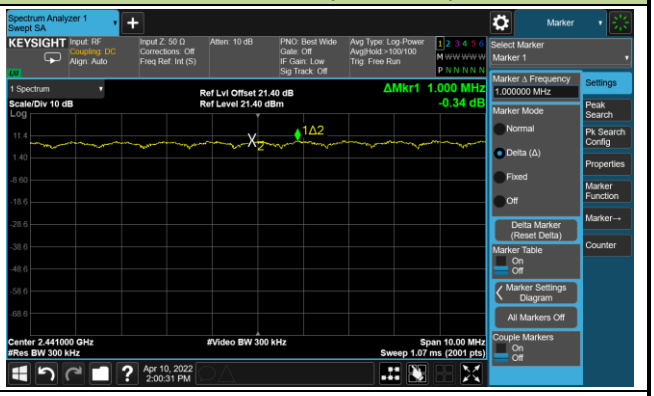
Channel 78 (2480MHz)	
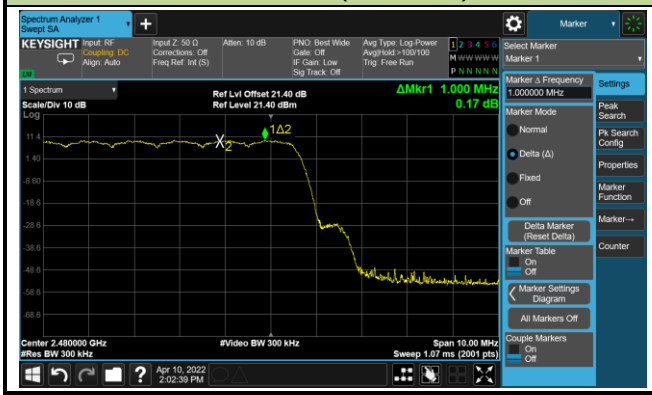	

3DH5 Carrier Frequency Separation	
Channel 00 (2402MHz)	Channel 39 (2441MHz)
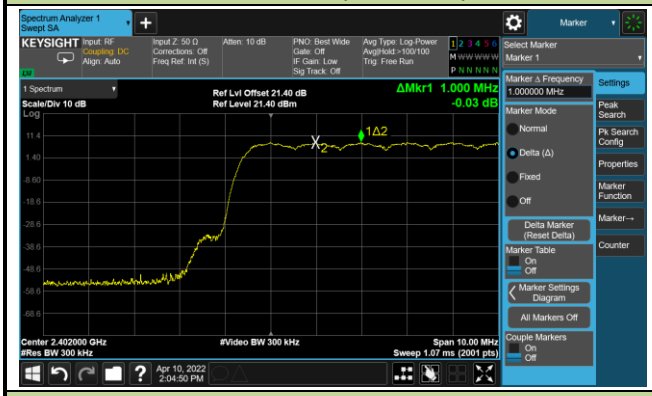	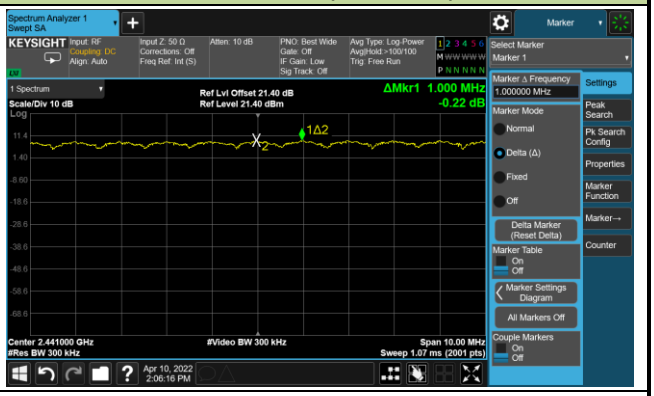
Channel 78 (2480MHz)	
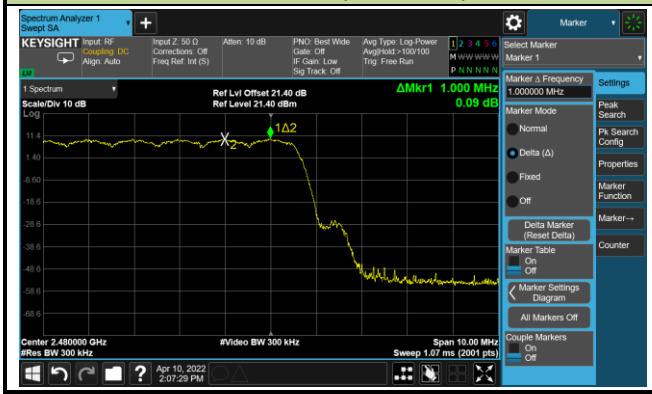	

A.5 Number of Hopping Channels Test Result

Test Site	SIP-TR2	Test Engineer	Alisa Deng
Test Date	2022/04/10		

Test Mode (Hopping)	Channel Numbers	Frequency (MHz)	Limit (Hopping Channels)	Result
DH5	79	2402~2480	≥ 15	Pass
2DH5	79	2402~2480	≥ 15	Pass
3DH5	79	2402~2480	≥ 15	Pass

DH5 Number of Hopping Channels

2402 ~ 2421MHz

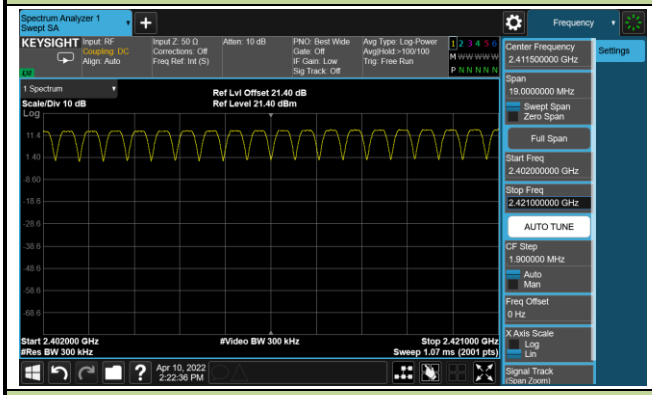

2422 ~ 2441MHz

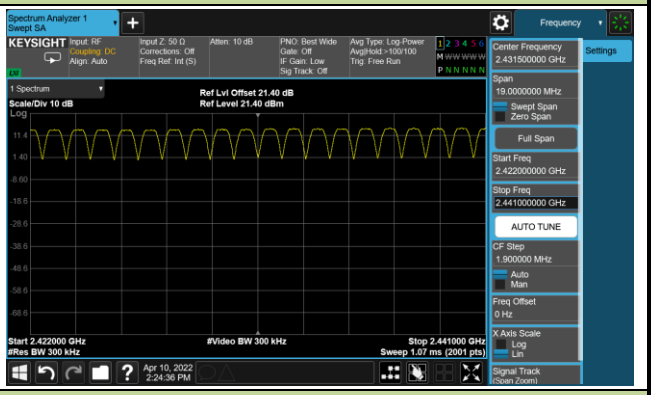

2442 ~ 2461MHz

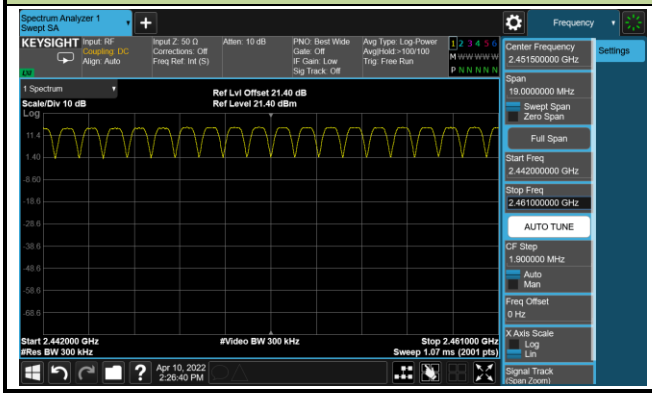

2462 ~ 2480MHz

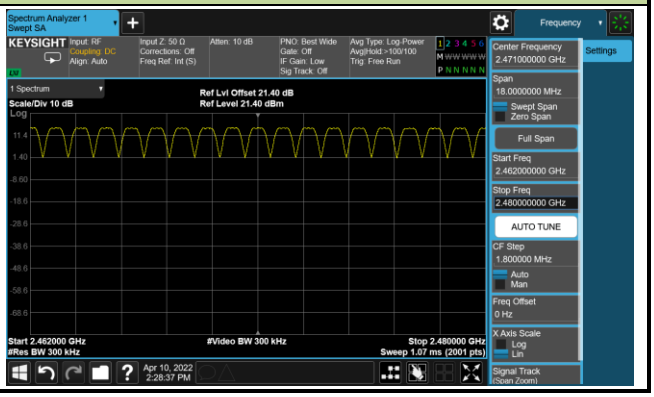

2DH5 Number of Hopping Channels	
2402 ~ 2421MHz	2422 ~ 2441MHz
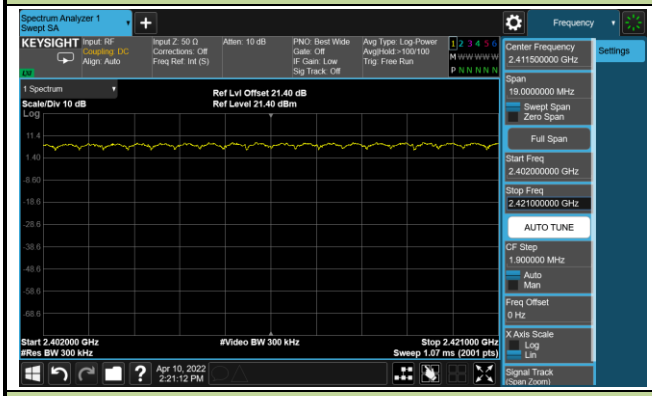	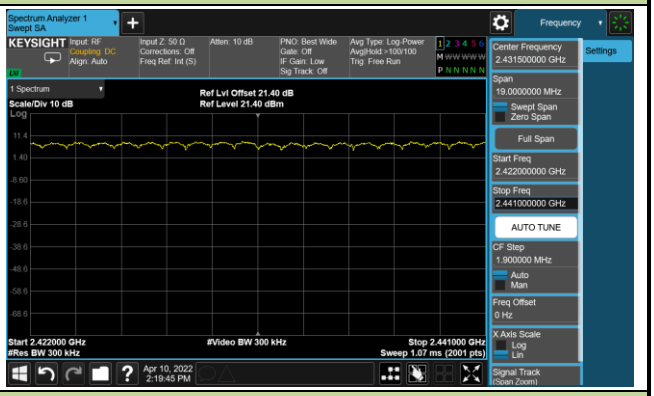
2442 ~ 2461MHz	2462 ~ 2480MHz
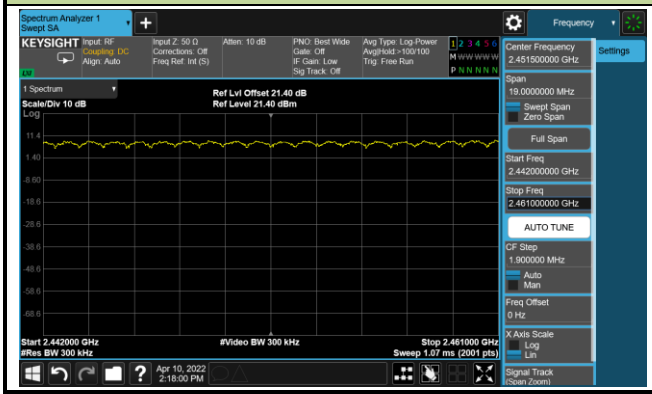	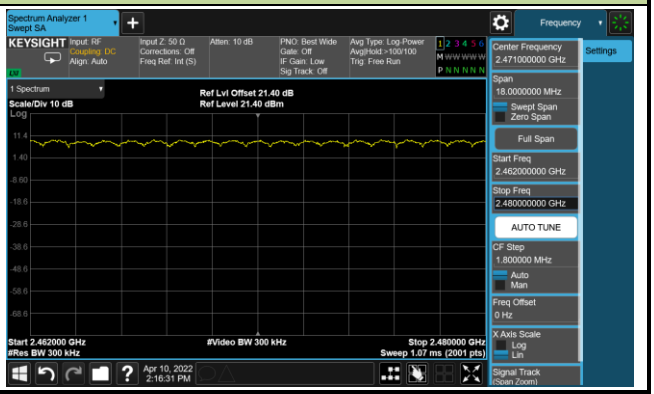

3DH5 Number of Hopping Channels	
2402 ~ 2421MHz	2422 ~ 2441MHz
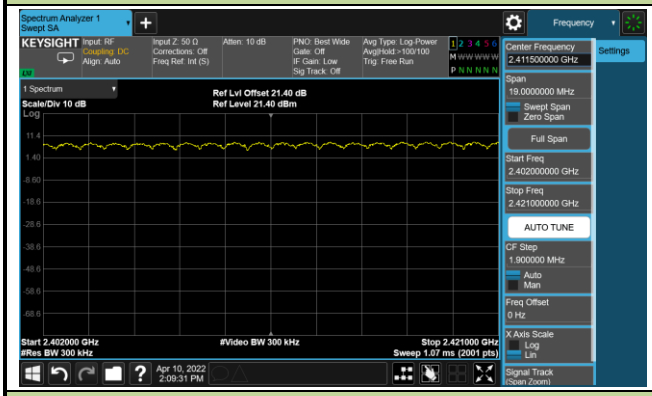	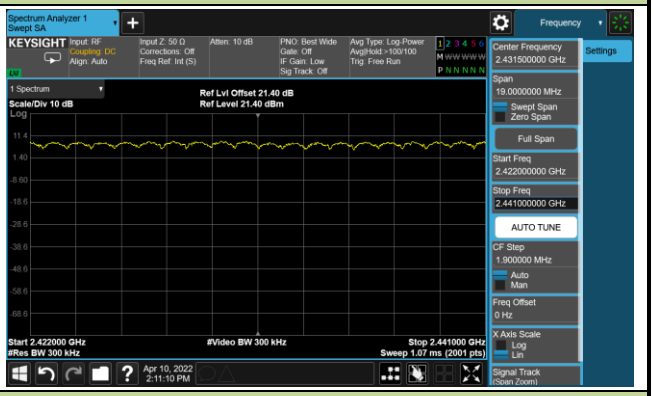
2442 ~ 2461MHz	2462 ~ 2480MHz
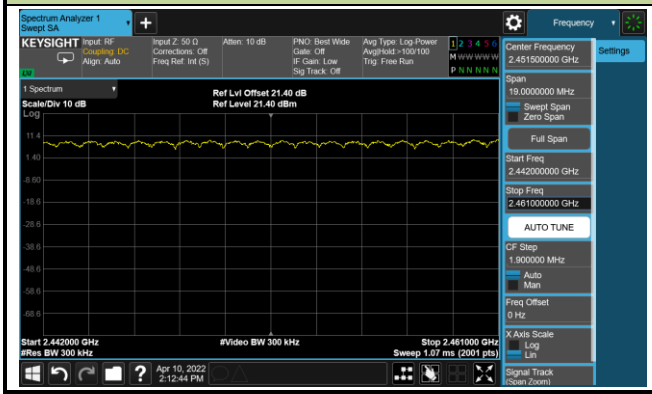	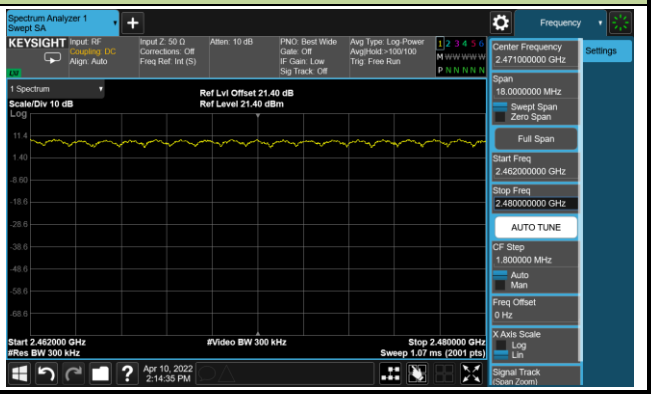

A.6 Time of Occupancy Test Result

Test Site	SIP-TR2	Test Engineer	Alisa Deng
Test Date	2022/04/10		

Test Mode	Channel No.	Frequency (MHz)	Transmit Time Per Hop (ms)	Observation Period (s)	Number of Hops in Sweep Time	Number of Hops in Observation Period	Time of Occupancy (ms)	Limit (ms)	Result
3DH1	00~78	2402~2480	0.3842	31.6	59	310	119.38	≤ 400	Pass
3DH3	00~78	2402~2480	1.625	31.6	31	163	265.31	≤ 400	Pass
3DH5	00~78	2402~2480	2.853	31.6	19	100	285.49	≤ 400	Pass

Note:

1. Number of Hops in Observation Period = Number of Hops in Sweep Time * (Observation Period / Sweep Time), Sweep Time = 6s.
2. Time of Occupancy (ms) = Number of Hops in Sweep Time (ms) * Number of Hops in Observation Period

Transmit Time Per Hop	
3DH1	3DH3
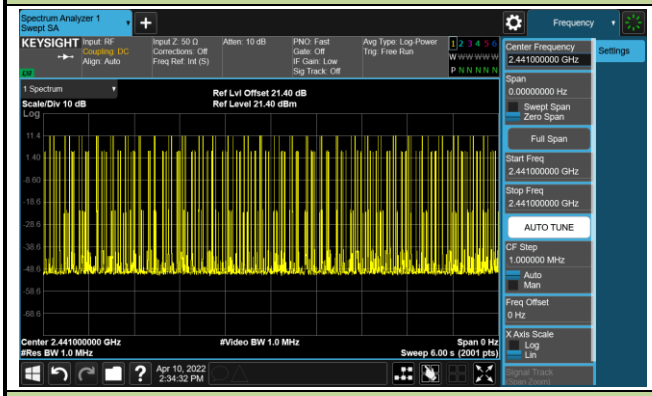	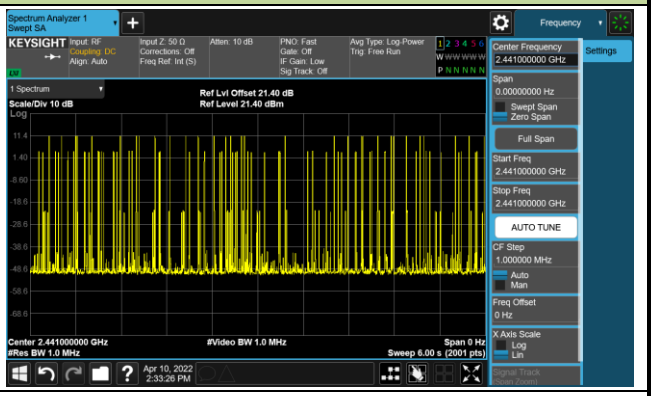
3DH5	

Number of Hops in Sweep Time	
3DH1	3DH3
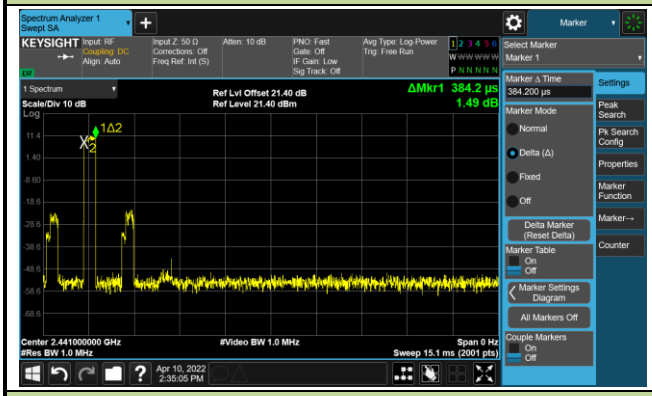	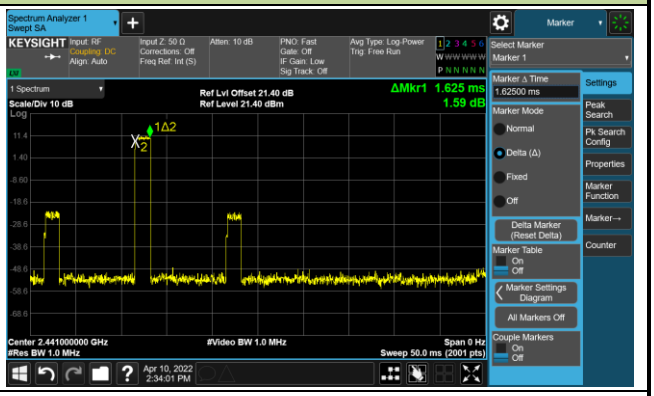
3DH5	
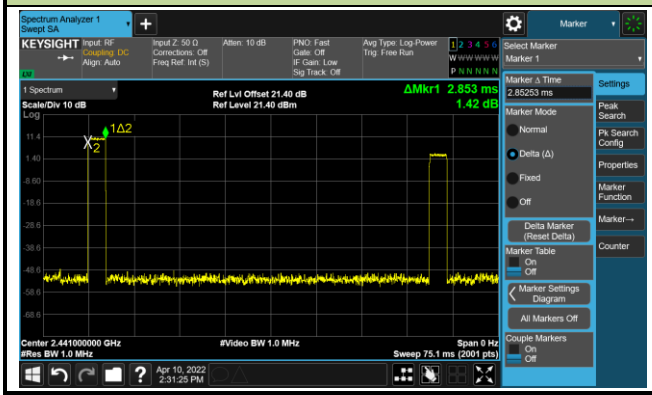	

A.7 Band-edge Compliance Test Result

Test Site	SIP-TR2	Test Engineer	Alisa Deng
Test Date	2022/04/10		

Test Mode	Channel No.	Frequency (MHz)	Limit	Result
DH5	00	2402	20dBc	Pass
DH5	78	2480	20dBc	Pass
2DH5	00	2402	20dBc	Pass
2DH5	78	2480	20dBc	Pass
3DH5	00	2402	20dBc	Pass
3DH5	78	2480	20dBc	Pass