TEST REPORT

Product Name : remote control car
Model Number : MT1061
FCC ID : 2ATH8202007210123

Prepared for : YING JIANG Technology Toys
Address : Hengxin Building material Opposite 324 National Road, Lianshang Town, Chenghai District, Shantou City, Guangdong Province

Prepared by : EMTEK (SHENZHEN) CO., LTD.
Address : Building 69, Majialong Industry Zone, Nanshan District, Shenzhen, Guangdong, China

Tel: (0755) 26954280
Fax: (0755) 26954282

Report Number : ES200727004W
Date(s) of Tests : August 04, 2020 to August 20, 2020
Date of issue : August 21, 2020

Table of Contents

1 EUT TECHNICAL DESCRIPTION 4

2 SUMMARY OF TEST RESULT 5

3 TEST METHODOLOGY 6

3.1 GENERAL DESCRIPTION OF APPLIED STANDARDS 6
3.2 MEASUREMENT EQUIPMENT USED 6
3.3 DESCRIPTION OF TEST MODES 7

4 FACILITIES AND ACCREDITATIONS 8

4.1 FACILITIES 8
4.2 LABORATORY ACCREDITATIONS AND LISTINGS 8

5 TEST SYSTEM UNCERTAINTY 9

6 SETUP OF EQUIPMENT UNDER TEST 10

6.1 RADIO FREQUENCY TEST SETUP 1 10
6.2 RADIO FREQUENCY TEST SETUP 2 10
6.3 CONDUCTED EMISSION TEST SETUP 11
6.4 BLOCK DIAGRAM CONFIGURATION OF TEST SYSTEM 12
6.5 SUPPORT EQUIPMENT 12

7 TEST REQUIREMENTS 13

7.1 OCCUPIED BANDWIDTH 13
7.2 RADIATED SPURIOUS EMISSION 15
7.3 CONDUCTED EMISSION TEST 23

8 ANTENNA APPLICATION 24

8.2 RESULT 24

9 APPENDIX C PHOTOGRAPHS OF EUT 25

TEST RESULT CERTIFICATION

Applicant	:	YING JIANG Technology Toys
Address	:	Hengxin Building material Opposite 324 National Road, Lianshang Town, Chenghai District, Shantou City, Guangdong Province
Manufacturer	:	YING JIANG Technology Toys
Address	:	Hengxin Building material Opposite 324 National Road, Lianshang Town, Chenghai District, Shantou City, Guangdong Province
EUT	:	remote control car
Model Name	:	MT1061
Trademark	:	N/A

Measurement Procedure Used:

APPLICABLE STANDARDS	
STANDARD	**TEST RESULT**
FCC 47 CFR Part 2, Subpart J FCC 47 CFR Part 15, Subpart C	PASS

The above equipment was tested by EMTEK(SHENZHEN) CO., LTD. The test data, data evaluation, test procedures, and equipment configurations shown in this report were made in accordance with the procedures given in ANSI C63.10 (2013) and the energy emitted by the sample EUT tested as described in this report is in compliance with the requirements of FCC Rules Part 2 and Part 15.227.

The test results of this report relate only to the tested sample identified in this report.

Date of Test : August 04, 2020 to August 20, 2020

Prepared by : Sewen Guo /Editor

Reviewer : Joe Xia/Editor

Approve & Authorized Signer : Lisa Wang/Manager

EMTEK (SHENZHEN) CO., LTD. TESTING

1 EUT TECHNICAL DESCRIPTION

Characteristics	Description
Device Type:	remote control car
Modulation:	MT1061
Operating Frequency Range(s):	26.96-27.28 MHz
Channel Frequency:	27.145MHz
Number of Channels:	1 channel
Antenna Type :	Internal Antenna
Power supply:	☒: DC3V
Temperature Range:	0°C ~ +45°C

Note: *for more details, please refer to the User's manual of the EUT.*

2 SUMMARY OF TEST RESULT

FCC Part Clause	Test Parameter	Verdict	Remark
2.1049	Occupied Bandwidth	PASS	
15.227(a) (b) 15.209	Radiated Spurious Emissions	PASS	
15.207	Conducted Emission	N/A	
NOTE1: N/A (Not Applicable)			

RELATED SUBMITTAL(S) / GRANT(S):

This submittal(s) (test report) is intended for FCC ID: 2ATH8202007210123 filing to comply with Section 15.227 of the FCC Part 15, Subpart C Rules.

3 TEST METHODOLOGY

3.1 GENERAL DESCRIPTION OF APPLIED STANDARDS

According to its specifications, the EUT must comply with the requirements of the following standards:
FCC 47 CFR Part 2, Subpart J
FCC 47 CFR Part 15, Subpart C

3.2 MEASUREMENT EQUIPMENT USED

3.2.1 Conducted Emission Test Equipment

EQUIPMENT TYPE	MFR	MODEL NUMBER	SERIAL NUMBER	LASTCAL.	DUE CAL.
Test Receiver	Rohde & Schwarz	ESCS30	828985/018	05/16/2020	05/15/2021
L.I.S.N.	Schwarzbeck	NNLK8129	8129203	05/16/2020	05/15/2021
50Ω Coaxial Switch	Anritsu	MP59B	M20531	05/16/2020	05/15/2021
Pulse Limiter	Rohde & Schwarz	ESH3-Z2	100006	05/16/2020	05/15/2021
Voltage Probe	Rohde & Schwarz	TK9416	N/A	05/16/2020	05/15/2021
I.S.N	Rohde & Schwarz	ENY22	1109.9508.02	05/16/2020	05/15/2021

3.2.2 Radiated Emission Test Equipment

EQUIPMENT TYPE	MFR	MODEL NUMBER	SERIAL NUMBER	LAST CAL.	DUE CAL.
EMI Test Receiver	Rohde & Schwarz	ESU	1302.6005.26	05/16/2020	05/15/2021
Pre-Amplifier	HP	8447D	2944A07999	05/16/2020	05/15/2021
Bilog Antenna	Schwarzbeck	VULB9163	142	05/16/2020	05/15/2021
Loop Antenna	ARA	PLA-1030/B	1029	05/16/2020	05/15/2021
Horn Antenna	Schwarzbeck	BBHA 9170	BBHA9170399	05/16/2020	05/15/2021
Horn Antenna	Schwarzbeck	BBHA 9120	D143	05/16/2020	05/15/2021
Cable	Schwarzbeck	AK9513	ACRX1	05/16/2020	05/15/2021
Cable	Rosenberger	N/A	FP2RX2	05/16/2020	05/15/2021
Cable	Schwarzbeck	AK9513	CRPX1	05/16/2020	05/15/2021
Cable	Schwarzbeck	AK9513	CRRX2	05/16/2020	05/15/2021

3.2.3 Radio Frequency Test Equipment

EQUIPMENT TYPE	MFR	MODEL NUMBER	SERIAL NUMBER	LASTCAL.	DUE CAL.
Spectrum Analyzer	Agilent	E4407B	88156318	05/16/2020	05/15/2021
Signal Analyzer	Agilent	N9010A	My53470879	05/16/2020	05/15/2021
Power meter	Anritsu	ML2495A	0824006	05/16/2020	05/15/2021
Power sensor	Anritsu	MA2411B	0738172	05/16/2020	05/15/2021

Remark: *Each piece of equipment is scheduled for calibration once a year.*

3.3 DESCRIPTION OF TEST MODES

The EUT has been tested under its typical operating condition.
The EUT configuration for testing is installed on RF field strength measurement to meet the Commissions requirement and operating in a manner which intends to maximize its emission characteristics in a continuous normal application.
The Transmitter was operated in the normal operating mode. The TX frequency was fixed which was for the purpose of the measurements.

Pre-defined engineering program for regulatory testing used to control the EUT for staying in continuous transmitting mode is programmed.

4 FACILITIES AND ACCREDITATIONS

4.1 FACILITIES

All measurement facilities used to collect the measurement data are located at

Building 69, Majialong Industry Zone District, Nanshan District, Shenzhen, China
The sites are constructed in conformance with the requirements of ANSI C63.7, ANSI C63.10 and CISPR Publication 22.

4.2 LABORATORY ACCREDITATIONS AND LISTINGS

Site Description

EMC Lab.	:	Accredited by CNAS, 2018.11.30 The certificate is valid until 2022.10.28 The Laboratory has been assessed and proved to be in compliance with CNAS-CL01:2006 (identical to ISO/IEC 17025:2017) The Certificate Registration Number is L2291 Accredited by FCC, Designation Number: CN1204 Test Firm Registration Number: 882943 Accredited by A2LA, August 08, 2018 The Certificate Registration Number is 4321.01 Accredited by Industry Canada, November 09, 2018 The Conformity Assessment Body Identifier is CN0008
Name of Firm	:	EMTEK(SHENZHEN) CO., LTD.
Site Location	:	Building 69, Majialong Industry Zone, Nanshan District, Shenzhen, Guangdong, China

5 TEST SYSTEM UNCERTAINTY

The following measurement uncertainty levels have been estimated for tests performed on the apparatus:

Parameter	Uncertainty
Radio Frequency	±1x10^-5
Conducted Emissions Test	±2.0dB
Radiated Emission Test	±2.0dB
Occupied Bandwidth Test	±1.0dB
All emission, radiated	±3dB
Temperature	±0.5℃
Humidity	±3%

Measurement Uncertainty for a level of Confidence of 95%

6 SETUP OF EQUIPMENT UNDER TEST

6.1 RADIO FREQUENCY TEST SETUP 1

The component's antenna ports(s) of the EUT are connected to the measurement instrument per an appropriate attenuator. The EUT is controlled by PC/software to emit the specified signals for the purpose of measurements.

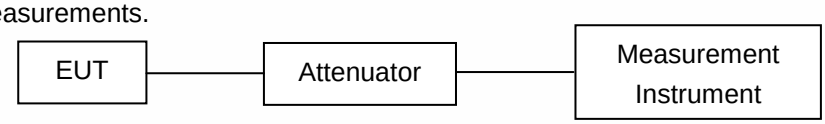

6.2 RADIO FREQUENCY TEST SETUP 2

The test site semi-anechoic chamber has met the requirement of NSA tolerance 4 dB according to the standards: ANSI C63.10. The test distance is 3m.The setup is according to the requirements in Section 13.1.4.1 of ANSI C63.10-2013 and CAN/CSA-CEI/IEC CISPR 22.

Below 30MHz：
The EUT is placed on a turntable 0.8 meters above the ground in the chamber, 3 meter away from the antenna (loop antenna). The Antenna should be positioned with its plane vertical at the specified distance from the EUT and rotated about its vertical axis for maximum response at each azimuth about the EUT. The center of the loop shall be 1 m above the ground. For certain applications, the loop antenna plane may also need to be positioned horizontally at the specified distance from the EUT.

Above 30MHz：
The EUT is placed on a turntable 0.8 meters above the ground in the chamber, 3 meter away from the antenna. The maximal emission value is acquired by adjusting the antenna height, polarisation and turntable azimuth. Normally, the height range of antenna is 1 m to 4 m, the azimuth range of turntable is 0° to 360°, and the receive antenna has two polarizations Vertical (V) and Horizontal (H).

(a) Radiated Emission Test Set-Up, Frequency Below 30MHz

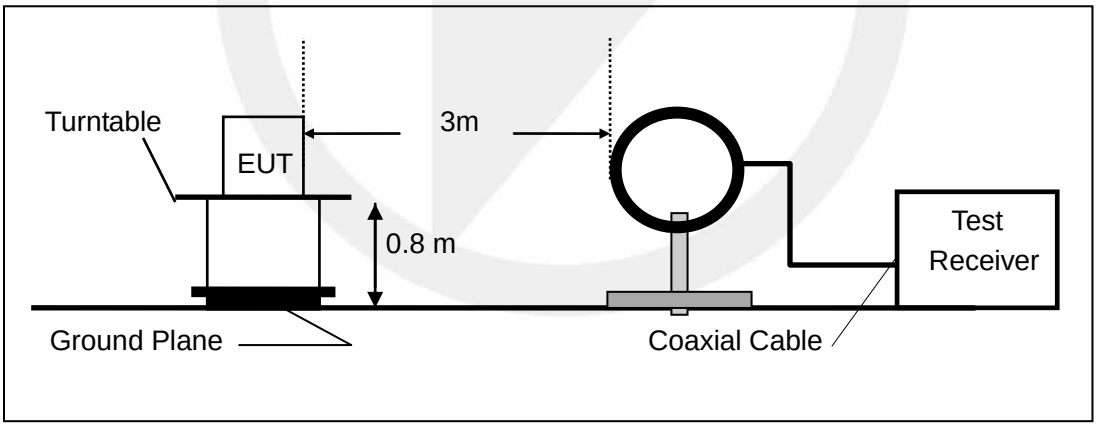

(b) Radiated Emission Test Set-Up, Frequency Below 1000MHz

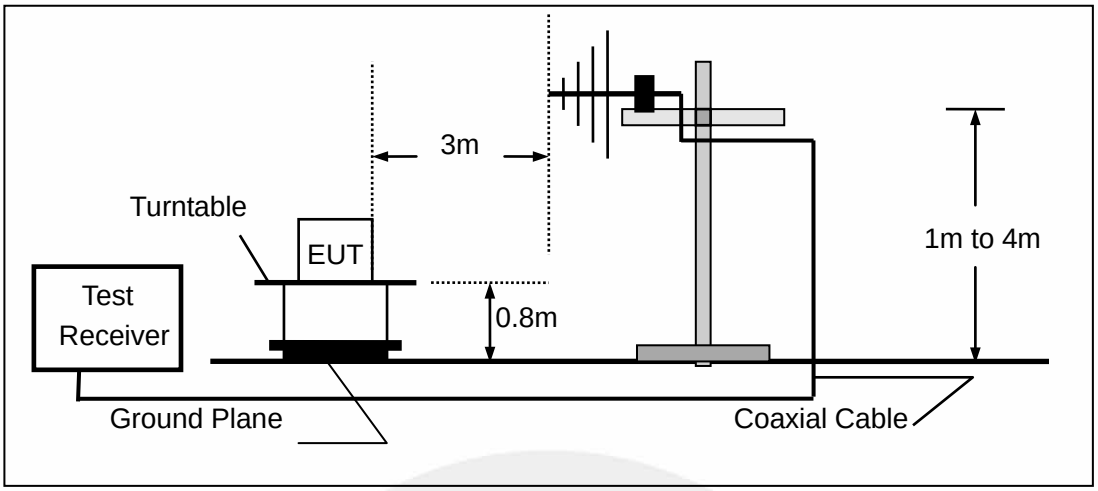

6.3 CONDUCTED EMISSION TEST SETUP

The mains cable of the EUT (maybe per AC/DC Adapter) must be connected to LISN. The LISN shall be placed 0.8 m from the boundary of EUT and bonded to a ground reference plane for LISN mounted on top of the ground reference plane. This distance is between the closest points of the LISN and the EUT. All other units of the EUT and associated equipment shall be at least 0.8m from the LISN.

Ground connections, where required for safety purposes, shall be connected to the reference ground point of the LISN and, where not otherwise provided or specified by the manufacturer, shall be of same length as the mains cable and run parallel to the mains connection at a separation distance of not more than 0.1 m.

According to the requirements in ANSI C63.10-2013 Conducted emissions from the EUT measured in the frequency range between 0.15 MHz and 30 MHz using CISPR Quasi-Peak and average detector mode.

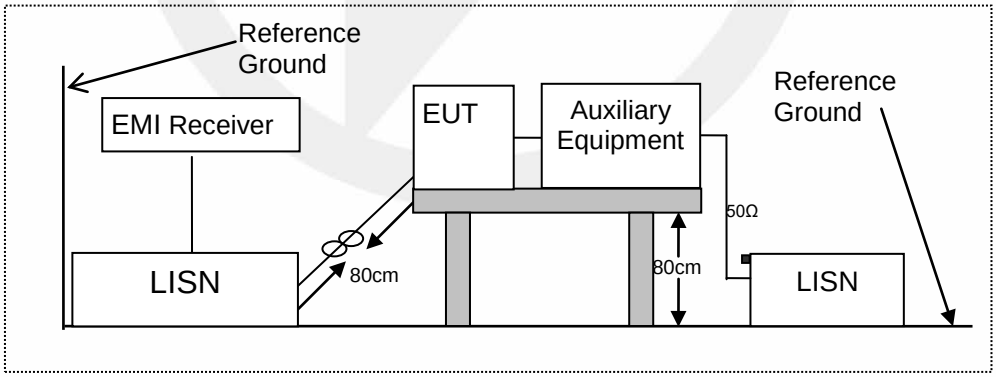

6.4 BLOCK DIAGRAM CONFIGURATION OF TEST SYSTEM

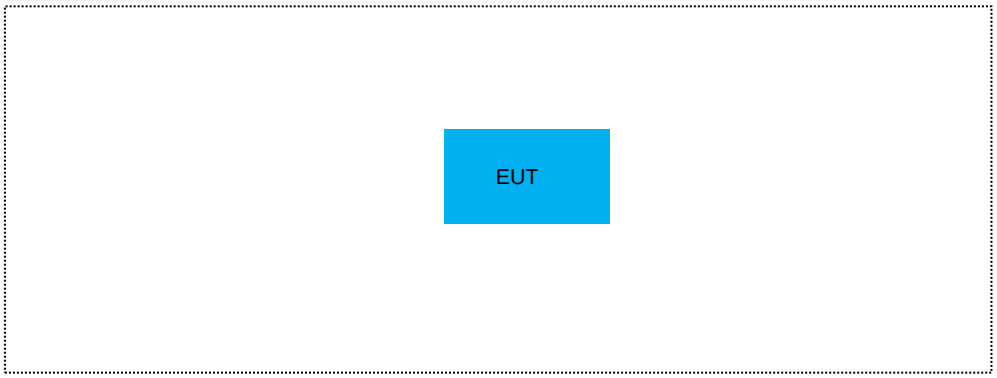

6.5 SUPPORT EQUIPMENT

EUT Cable List and Details			
Cable Description	Length (m)	Shielded/Unshielded	With / Without Ferrite
/	/	/	/

Auxiliary Cable List and Details			
Cable Description	Length (m)	Shielded/Unshielded	With / Without Ferrite
/	/	/	/

Auxiliary Equipment List and Details			
Description	Manufacturer	Model	Serial Number
/	/	/	/

Notes:

1. *All the equipment/cables were placed in the worst-case configuration to maximize the emission during the test.*
2. *Grounding was established in accordance with the manufacturer's requirements and conditions for the intended use.*
3. *Unless otherwise denoted as EUT in 『Remark』 column , device(s) used in tested system is a support equipment*

7 TEST REQUIREMENTS

7.1 OCCUPIED BANDWIDTH

7.1.1 Applicable Standard

According to FCC Part 2.1049

7.1.2 Conformance Limit

No limit requirement.

7.1.3 Test Configuration

Test according to clause 6.1 radio frequency test setup 1

7.1.4 Test Procedure

The EUT was operating in transmit mode and controlled its channel. Printed out the test result from the spectrum by hard copy function.
The RF output of EUT was connected to the spectrum analyzer by RF cable and attenuator. The path loss was compensated to the results for each measurement.
Set to the maximum power setting and enable the EUT transmit continuously
Set RBW = 1% occupied bandwidth (30Hz).
Set the video bandwidth (VBW) =3 times RBW .
Set Span= approximately 2 to 3 times the occupied bandwidth
Set Detector = Peak.
Set Trace mode = max hold.
Set Sweep = auto couple.
The EUT should be transmitting at its maximum data rate. Allow the trace to stabilize. Use the marker-to-peak function to set the marker to the peak of the emission. Use the marker-delta function to measure 99% down one side of the emission. Reset the markerdelta function, and move the marker to the other side of the emission, until it is (as close as possible to) even with the reference marker level. The marker-delta reading at this point is the 99% bandwidth of the emission.
If this value varies with different modes of operation (e.g., data rate, modulation format, etc.), repeat this test for each variation.
Measure and record the results in the test report.

7.1.5 Test Results

Temperature :	22℃	Test Date :	
Humidity :	55 %	Test By:	XW

Modulation Mode	Channel Number	Channel Frequency (MHz)	-20dB Measurement Bandwidth (kHz)	99% Bandwidth (kHz)	Limit (kHz)	Verdict
ASK	0	27.145	49.52	147.62	N/A	PASS
Note: N/A (Not Applicable)						

Test Model	Occupied Bandwidth Channel 0: 27.145MHz	ASK Modulation

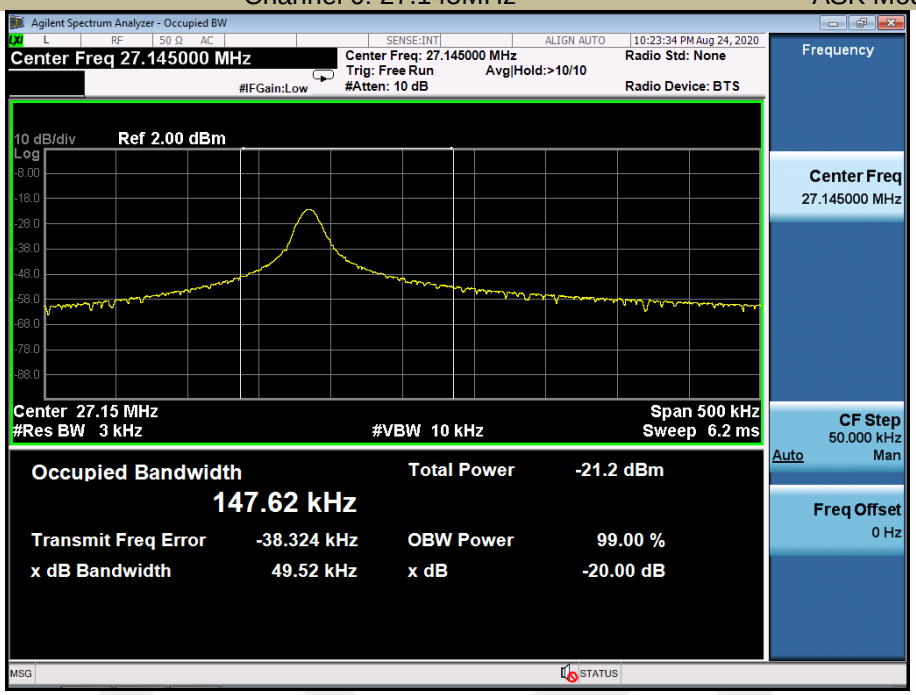

7.2 RADIATED SPURIOUS EMISSION

7.2.1 Applicable Standard

According to FCC Part 15.227 and 15.209

7.2.2 Conformance Limit

According to FCC Part 15.227:

(a) The field strength of any emission within this band shall not exceed 10,000 microvolts/meter at 3 meters. The emission limit in this paragraph is based on measurement instrumentation employing an average detector. The provisions in §15.35 for limiting peak emissions apply.

Fundamental Frequency	Field Strength Of Fundamental
27.145MHz	AV:80 dBuV/m at 3m distance
	PK:100 dBuV/m at 3m distance

Emission level (dBuV/m)=20log Emission level (uV/m)

(b) The field strength of any emissions which appear outside of this band shall not exceed the general radiated emission limits in §15.209

According to FCC Part15.205, Restricted bands

MHz	MHz	MHz	GHz
0.090-0.110	16.42-16.423	399.9-410	4.5-5.15
10.495-0.505	16.69475-16.69525	608-614	5.35-5.46
2.1735-2.1905	16.80425-16.80475	960-1240	7.25-7.75
4.125-4.128	25.5-25.67	1300-1427	8.025-8.5
4.17725-4.17775	37.5-38.25	1435-1626.5	9.0-9.2
4.20725-4.20775	73-74.6	1645.5-1646.5	9.3-9.5
6.215-6.218	74.8-75.2	1660-1710	10.6-12.7
6.26775-6.26825	123-138	2200-2300	14.47-14.5
8.291-8.294	149.9-150.05	2310-2390	15.35-16.2
8.362-8.366	156.52475-156.52525	2483.5-2500	17.7-21.4
8.37625-8.38675	156.7-156.9	2690-2900	22.01-23.12
8.41425-8.41475	162.0125-167.17	3260-3267	23.6-24.0
12.29-12.293	167.72-173.2	3332-3339	31.2-31.8
12.51975-12.52025	240-285	3345.8-3358	36.43-36.5
12.57675-12.57725	322-335.4	3600-4400	(2)
13.36-13.41			

According to FCC Part15.205, the level of any transmitter spurious emission in Restricted bands shall not exceed the level of the emission specified in the following table

Restricted Frequency(MHz)	Field Strength (μV/m)	Field Strength (dBμV/m)	Measurement Distance
0.009~0.490	2400/F(KHz)	300	See the remark
0.490~1.705	24000/F(KHz)	30	
1.705~30.0	30	30	
30-88	100	40	3
88-216	150	43.5	3
216-960	200	46	3
Above 960	500	54	3
Remark :1. Emission level in dBuV/m=20 log (uV/m) 2. Measurement was performed at an antenna to the closed point of EUT distance of meters.			

3. Distance extrapolation factor =40log(Specific distance/ test distance)(dB);
Limit line=Specific limits(dBuV) + distance extrapolation factor.
for the frequency ranges below 30 MHz, a narrower RBW is used for these ranges but the measured value should add a RBW correction factor (RBWCF) where RBWCF [dB] =10*lg(100 [kHz]/narrower RBW [kHz]). , the narrower RBW is 1 kHz and RBWCF is 20 dB for the frequency 9 kHz to 150 kHz, and the narrower RBW is 10 kHz and RBWCF is 10 dB for the frequency 150 kHz to 30 MHz.

7.2.3 Test Configuration

Test according to clause 6.2 radio frequency test setup 2

7.2.4 Test Procedure

This test is required for any spurious emission that falls in a Restricted Band, as defined in Section 15.205. It must be performed with the highest gain of each type of antenna proposed for use with the EUT. Use the following spectrum analyzer settings:
The EUT was placed on a turn table which is 0.8m above ground plane.
Maximum procedure was performed on the highest emissions to ensure EUT compliance.
Span = wide enough to fully capture the emission being measured
RBW = 100 kHz for f < 1 GHz(30MHz to 1GHz), 200Hz for f<150KHz(9KHz to 150KHz), 9KHz for f<30MHz(150KHz to 30KHz)
VBW ≥ RBW
Sweep = auto
Detector function = peak
Trace = max hold
Follow the guidelines in ANSI C63.10-2013 with respect to maximizing the emission by rotating the EUT, measuring the emission while the EUT is situated in three orthogonal planes (if appropriate), adjusting the measurement antenna height and polarization, etc. A pre-amp and a high pass filter are required for this test, in order to provide the measuring system with sufficient sensitivity. Allow the trace to stabilize. The peak reading of the emission, after being corrected by the antenna factor, cable loss, pre-amp gain, etc., is the peak field strength, which must comply with the limit specified in Section 15.35(b). Submit this data.
Now set the VBW to 10 Hz, while maintaining all of the other instrument settings. This peak level, once corrected, must comply with the limit specified in Section 15.209. If the dwell time per channel of the hopping signal is less than 100 ms, then the reading obtained with the 10 Hz VBW may be further adjusted by a “duty cycle correction factor”, derived from 20log(dwell time/100 ms), in an effort to demonstrate compliance with the 15.209 limit. Submit this data.
Repeat above procedures until all frequency measured was complete.

7.2.5 Test Results

■ Spurious Emission below 150kHz (9KHz to 150kHz)

Temperature:	24℃	Test Date:	
Humidity:	53 %	Test By:	XW
Test mode:	TX Mode		

Freq. (MHz)	Ant.Pol. H/V	Emission Level(dBuV/m)		Limit 3m(dBuV/m)		Over(dB)	
		PK	AV	PK	AV	PK	AV
--	--	--	--	--	--	--	--

Note: the amplitude of spurious emission that is attenuated by more than 20dB below the permissible limit has no need to be reported.
Distance extrapolation factor =40log(Specific distance/ test distance)(dB);
Limit line=Specific limits(dBuV) + distance extrapolation factor

■ Spurious Emission below 30MHz (150KHz to 30MHz)

Operation Mode: 27.145MHz

Freq. (MHz)	Ant.Pol. H/V	Emission Level(dBuV/m)		Limit 3m(dBuV/m)		Margin(dB)	
		PK	AV	PK	AV	PK	AV
27.145	H	60.99	50.25	100	80	-39.01	-29.75
27.145	V	56.56	45.20	100	80	-43.44	-34.80

All mode have been tested, and the worst result was report as below:

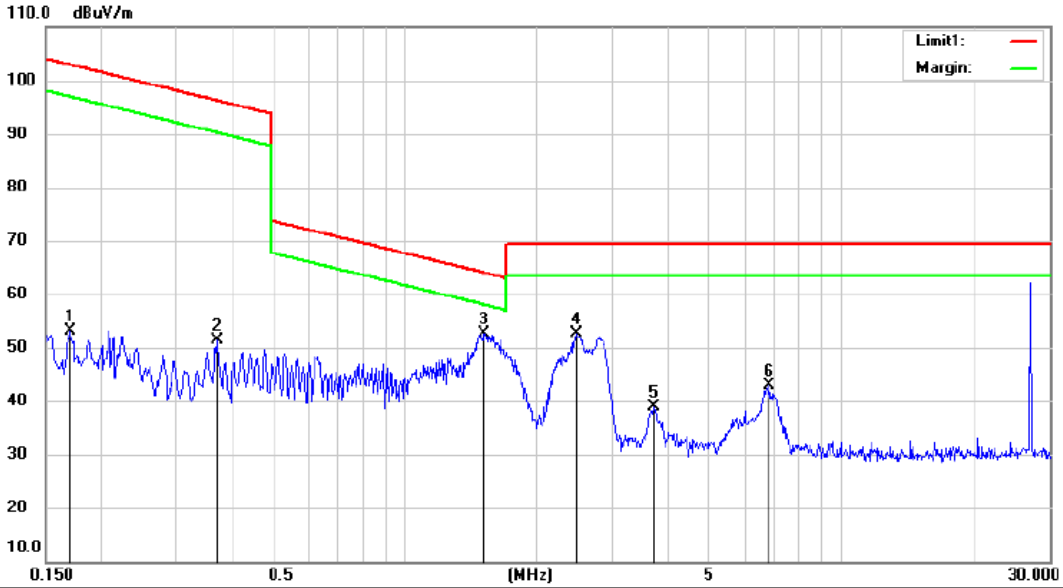

Site 3m Chamber #1 Polarization: X Temperature: 29.5 C

Limit: (RE)FCC PART 15.209(9K-30M) Power: DC 3V Humidity: 48 %

Mode:TX

Note:

No.	Mk.	Freq.	Reading Level	Correct Factor	Measure-ment	Limit	Over		Antenna Height	Table Degree	
		MHz	dBuV	dB	dBuV/m	dBuV/m	dB	Detector	cm	degree	Comment
1		0.1703	32.75	20.33	53.08	102.97	-49.89	QP			
2		0.3711	30.65	20.73	51.38	96.21	-44.83	QP			
3	*	1.5192	31.58	20.98	52.56	64.00	-11.44	QP			
4		2.4605	31.83	20.75	52.58	69.50	-16.92	QP			
5		3.7197	18.23	20.60	38.83	69.50	-30.67	QP			
6		6.8412	22.30	20.58	42.88	69.50	-26.62	QP			

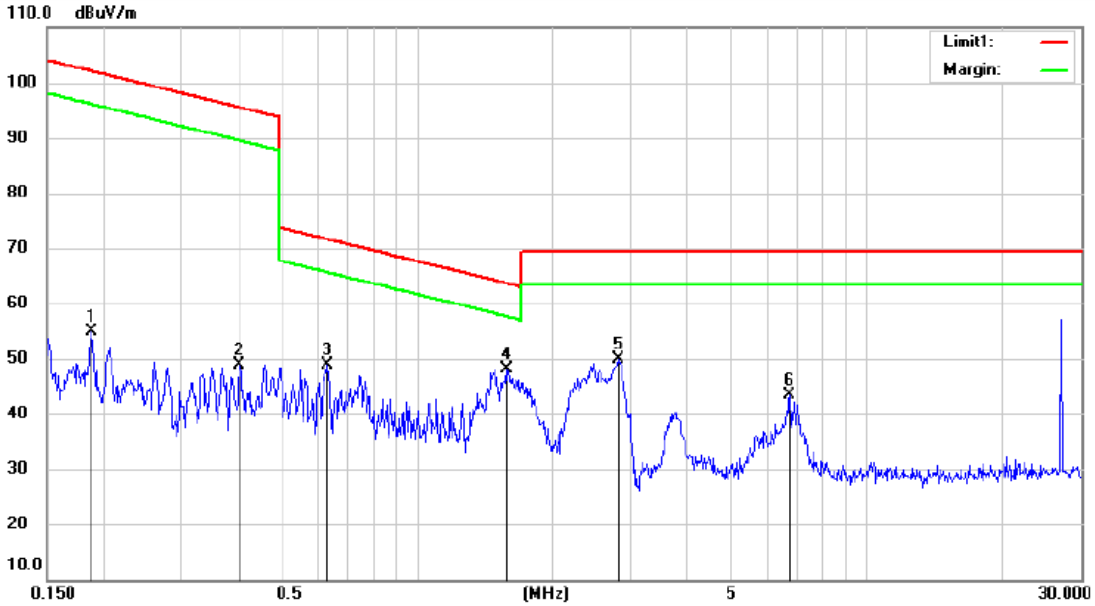

Site 3m Chamber #1 Polarization: Y Temperature: 29.5 C

Limit: (RE)FCC PART 15.209(9K-30M) Power: DC 3V Humidity: 48 %

Mode:TX

Note:

No.	Mk.	Freq.	Reading Level	Correct Factor	Measure-ment	Limit	Over		Antenna Height	Table Degree	
		MHz	dBuV	dB	dBuV/m	dBuV/m	dB	Detector	cm	degree	Comment
1		0.1883	34.44	20.37	54.81	102.10	-47.29	QP			
2		0.4018	27.99	20.80	48.79	95.52	-46.73	QP			
3		0.6304	27.96	21.03	48.99	71.62	-22.63	QP			
4	*	1.5766	27.07	20.97	48.04	63.68	-15.64	QP			
5		2.7942	29.24	20.68	49.92	69.50	-19.58	QP			
6		6.7333	22.72	20.58	43.30	69.50	-26.20	QP			

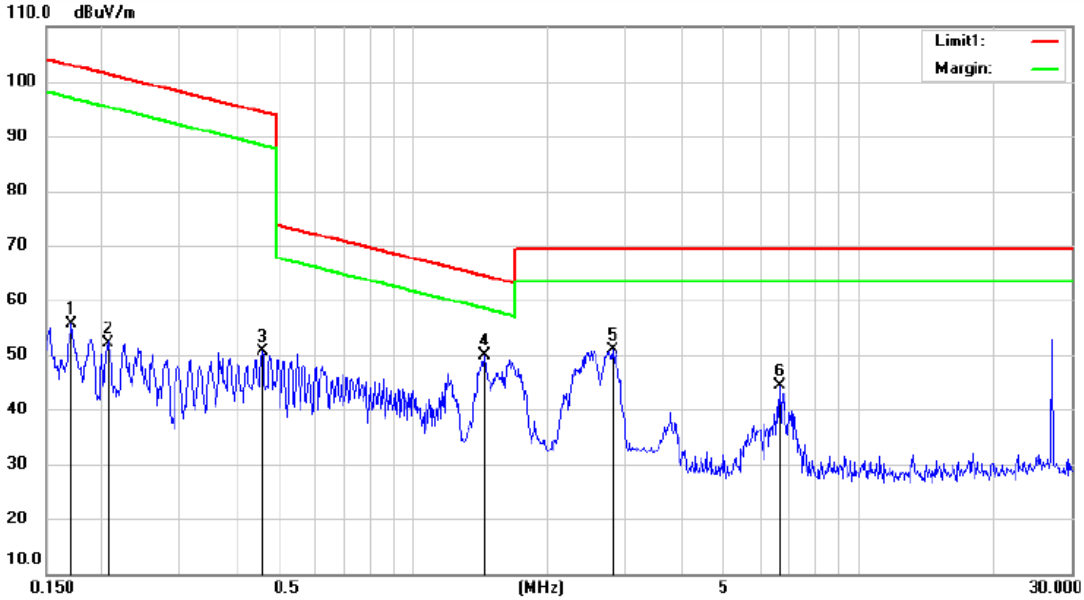

Site 3m Chamber #1 Polarization: Z Temperature: 29.5 C

Limit: (RE)FCC PART 15.209(9K-30M) Power: DC 3V Humidity: 48 %

Mode:TX

Note:

No.	Mk.	Freq.	Reading Level	Correct Factor	Measure-ment	Limit	Over		Antenna Height	Table Degree	
		MHz	dBuV	dB	dBuV/m	dBuV/m	dB	Detector	cm	degree	Comment
1		0.1712	35.18	20.33	55.51	102.93	-47.42	QP			
2		0.2072	31.70	20.40	52.10	101.27	-49.17	QP			
3		0.4587	29.82	20.92	50.74	94.37	-43.63	QP			
4	*	1.4408	28.95	21.00	49.95	64.46	-14.51	QP			
5		2.7942	30.14	20.68	50.82	69.50	-18.68	QP			
6		6.6271	23.80	20.58	44.38	69.50	-25.12	QP			

■ Spurious Emission Above 30MHz (30MHz to 1GHz)

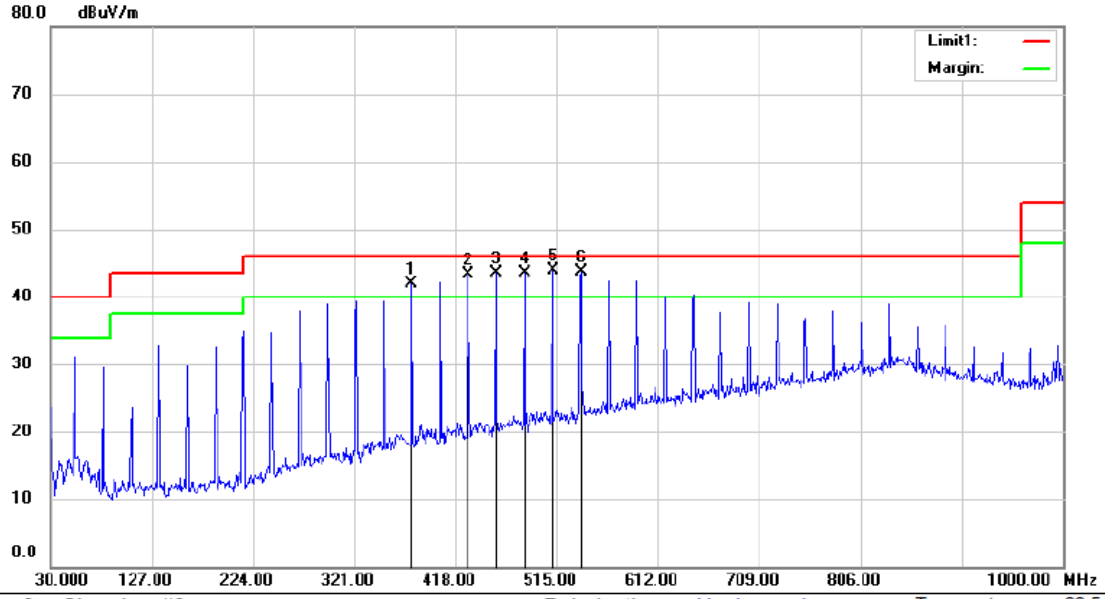

Site 3m Chamber #3 Polarization: ***Horizontal*** Temperature: 22.5 C

Limit: (RE)FCC PART 15 CLASS B Power: DC 3V Humidity: 45 %

Mode:27MHz

Note:

No.	Mk.	Freq.	Reading Level	Correct Factor	Measure-ment	Limit	Over		Antenna Height	Table Degree	
		MHz	dBuV	dB	dBuV/m	dBuV/m	dB	Detector	cm	degree	Comment
1	!	376.7750	50.96	-9.10	41.86	46.00	-4.14	QP			
2	!	430.6100	50.46	-7.08	43.38	46.00	-2.62	QP			
3	!	457.5274	50.52	-7.03	43.49	46.00	-2.51	QP			
4	!	484.4450	49.96	-6.37	43.59	46.00	-2.41	QP			
5	*	511.3625	49.63	-5.75	43.88	46.00	-2.12	QP			
6	!	538.2800	48.98	-5.24	43.74	46.00	-2.26	QP			

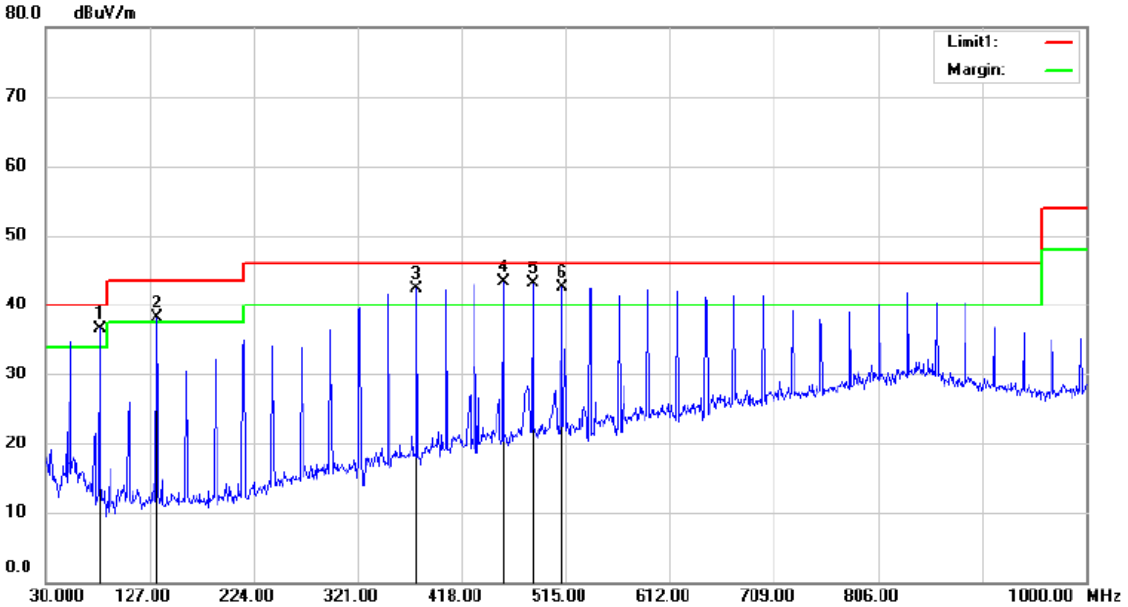

Site 3m Chamber #3 Polarization: *Vertical* Temperature: 22.5 C

Limit: (RE)FCC PART 15 CLASS B Power: DC 3V Humidity: 45 %

Mode:27MHz

Note:

No.	Mk.	Freq.	Reading Level	Correct Factor	Measure-ment	Limit	Over		Antenna Height	Table Degree	
		MHz	dBuV	dB	dBuV/m	dBuV/m	dB	Detector	cm	degree	Comment
1	!	80.6825	53.52	-17.01	36.51	40.00	-3.49	QP			
2	!	134.5175	54.74	-16.59	38.15	43.50	-5.35	QP			
3	!	376.7750	51.50	-9.10	42.40	46.00	-3.60	QP			
4	*	457.4062	50.33	-7.04	43.29	46.00	-2.71	QP			
5	!	484.4450	49.53	-6.37	43.16	46.00	-2.84	QP			
6	!	511.3625	48.20	-5.75	42.45	46.00	-3.55	QP			

7.3 CONDUCTED EMISSION TEST

7.3.1 Applicable Standard

According to FCC Part 15.207(a)

7.3.2 Conformance Limit

Conducted Emission Limit		
Frequency(MHz)	Quasi-peak	Average
0.15-0.5	66-56	56-46
0.5-5.0	56	46
5.0-30.0	60	50
Note: 1. The lower limit shall apply at the transition frequencies 2. The limit decreases in line with the logarithm of the frequency in the range of 0.15 to 0.50MHz.		

7.3.3 Test Configuration

Test according to clause 7.3 conducted emission test setup

7.3.4 Test Procedure

The EUT was placed on a table which is 0.8m above ground plane.
Maximum procedure was performed on the highest emissions to ensure EUT compliance.
Repeat above procedures until all frequency measured were complete.

7.3.5 Test Results

N/A

8 ANTENNA APPLICATION

8.1.1 Antenna Requirement

Standard	Requirement
FCC CRF Part 15.203	An intentional radiator shall be designed to ensure that no antenna other than that furnished by the responsible party shall be used with the device. The use of a permanently attached antenna or of an antenna that uses a unique coupling to the intentional radiator shall be considered sufficient to comply with the provisions of this section. The manufacturer may design the unit so that a broken antenna can be replaced by the user, but the use of a standard antenna jack or electrical connector is prohibited. This requirement does not apply to carrier current devices or to devices operated under the provisions of §15.211, §15.213, §15.217, §15.219, or §15.221. Further, this requirement does not apply to intentional radiators that must be professionally installed, such as perimeter protection systems and some field disturbance sensors, or to other intentional radiators which, in accordance with §15.31(d), must be measured at the installation site. However, the installer shall be responsible for ensuring that the proper antenna is employed so that the limits in this part are not exceeded.

For intentional device, according to FCC 47 CFR Section 15.203, an intentional radiator shall be designed to ensure that no antenna other than that furnished by the responsible party shall be used with the device. if transmitting antennas of directional gain greater than 6dBi are used, the power shall be reduced by the amount in dB that the directional gain of the antenna exceeds 6dBi.

8.2 RESULT

The EUT'S antenna is Internal Antenna, The antenna's gain is 0dBi and meets the requirement. and the antenna can't be replaced by the user, which in accordance to section 15.203.

9 APPENDIX C PHOTOGRAPHS OF EUT

EUT View 1

EUT View 2

EUT View 3

EUT View 4

EUT View 5

EUT View 6

EUT Housing and Board View 1

EUT Housing and Board View 2

Solder Board-Component View 1

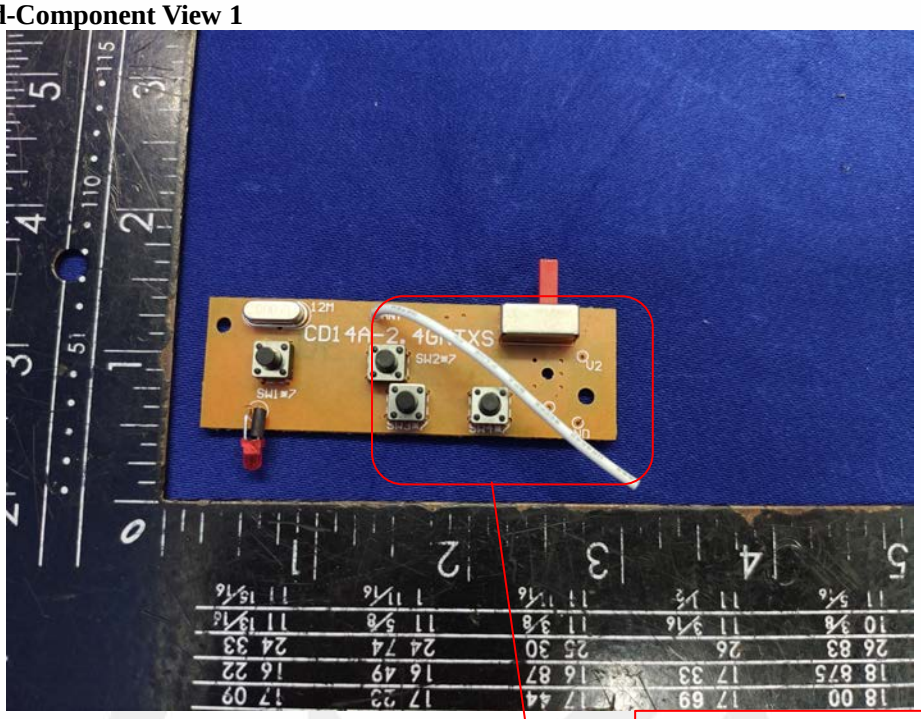

Solder Board-Component View 2

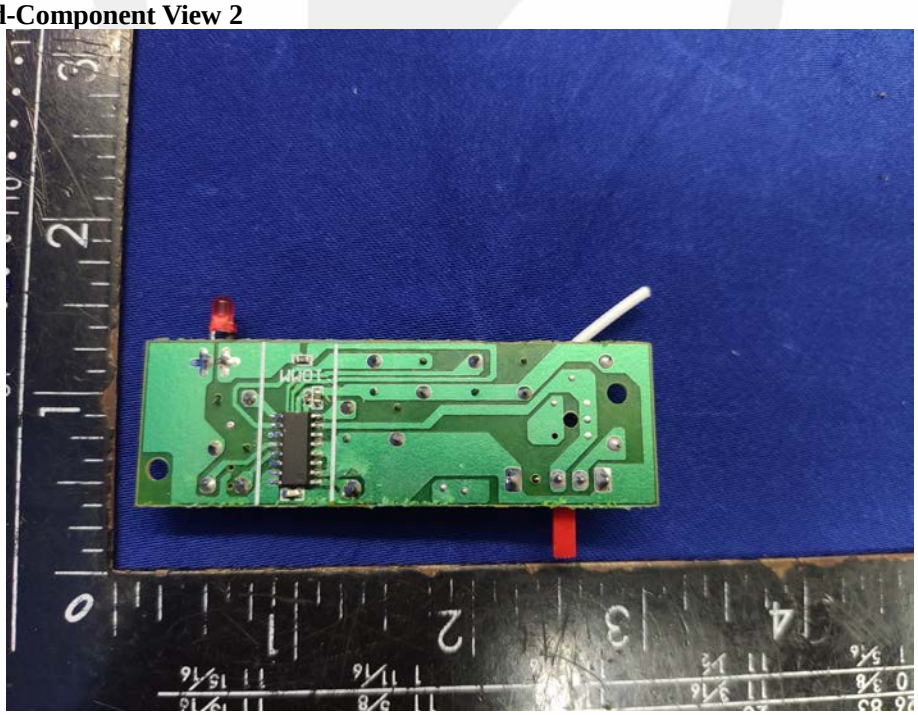

----------The end----------