SoftBank Robotics

Virtual Barrier Wall System

Whiz Screen Operational Manual

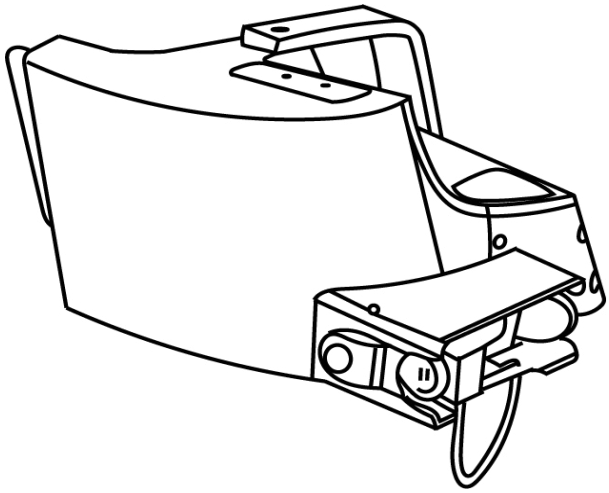

目 次

1 Introduction 3
2 Safety Precautions 4
2-1 About Safety Precautions 4
2-2 Description of Symbols 5
2-3 Description of Pictorial Symbols 5
2-4 Handling the Product and Battery (Common) 6
2-5 Handling the Product 8
2-6 Handling the Battery 9
2-7 Handling near Electronic Medical Devices 10
2-8 Product Disposal and Recycling 10
3 Names of Parts 11
4 LED lights 12
5 Preparation before Use 13
5-1 Charging the Product 13
5-2 Installing tag poles / satellite tags 14
5-2-1 Installing the tag pole (only in limited areas) 14
5-2-2 Installing satellite tags 15
5-3 Attaching the product to the machine 16
6 Using the product to perform autonomous cleaning 18
6-1 Installing the Battery 18
6-2 Turning the Power On 20
6-3 Performing Autonomous Cleaning 21
7 Specifications and Compliance Information 22
7-1 Specifications 22
7-2 Compliance Information 23

1 Introduction

Product name : Virtual wall barrier system

Market name : Whiz Screen

Whiz screen (hereinafter referred to as "the product") is a device to prevent Whiz i (hereinafter referred to as "the machine"), an autonomous vacuum sweeper developed by SoftBank Robotics and which features onboard BrainOS, from falls and collisions during autonomous cleaning by detecting a dedicated IC tag installed near an escalator in advance.

- The content described in the Operational Manual may be changed without prior notice due to specification change, etc.

2 Safety Precautions

2-1 About Safety Precautions

Precautions presented here are intended to prevent harm to the user and other persons as well as damage to property. Always observe them.

SoftBank Robotics shall not be liable for any damage incurred by the user or any third person as a result of the malfunctioning, mishandling, trouble, etc. experienced by the product or the battery.

This manual also provides safety precautions, correct handling procedures, and other regulatory information for using the product, the battery and the dedicated IC tag. Precautions provided in this manual do not cover all possible situations that may arise. Safety of the operator, pedestrians and people in the surrounding will be the first priority in any circumstances (such as when the product does not operate properly).

Always observe the precautions regarding the product installation and use, and store this manual where it can always be referred to. In the following emergencies, immediately turn off the main power switch on Whiz i.

- The product is in a hazardous state (examples: emitting smoke, is inoperable, etc.).
- The product comes close to inflicting harm on surrounding people or things.
- The product is operating (behaving) unpredictably or is operating in a manner that is inconsistent with this manual.

- See the Whiz i Operational Manual for details on how to operate Whiz i.

2-2 Description of Symbols

The following symbol categories explain the level of harm or damage that can occur if warnings are not observed and the product is used incorrectly. Read this manual after thoroughly understanding the symbols.

⚠ DANGER	Indicates a hazardous situation that, if not avoided, will result in death or serious injury*1.
⚠ WARNING	Indicates a hazardous situation that, if not avoided, could result in death or serious injury*1.
⚠ CAUTION	Indicates a hazardous situation that, if not avoided, could result in a minor injury*2.
NOTE	Indicates a situation that, if the note of caution is not observed, could result in physical damage*3.

*1 Serious injury refers to loss of eyesight, injury, burns (high-temperature, low-temperature), electric shock, bone fracture, poisoning, etc. with lasting aftereffects and requiring hospitalization or long-term hospital visits for treatment..

*2 Minor injury refers to injury, burns, electric shock, etc. although hospitalization and long-term hospital visits for treatment are not required.

*3 Physical damage refers to damage extending to residence and property as well as livestock and pets.

2-3 Description of Pictorial Symbols

The following pictorial indication categories explain information to be observed. Read this manual after thoroughly understanding the information.

	Prohibited (not allowed) action.		**Compulsory action** based on the instruction (must be performed).
	Must not be used where exposed to water, and must not be splashed with water.		Unplug the power plug from the outlet.
	Must not be disassembled or modified.		Read this operational manual in advance and understand the content.

2-4 Handling the Product and Battery (Common)

⚠ DANGER

Do not use, recharge, or leave the product or battery in a place subject to high temperature (near sparks or flames, near a heater, where there is direct sunlight, in a car on a hot day, etc.), in a warm place, or where heat accumulates (under a radiator, electric blanket, or other warm locations). Maintain adequate ventilation and make sure the product or battery is not covered with any kind of fabric.
High temperatures may cause deformation, malfunction, overheating, ignition, fire, electric shock, rupture, damage, or leakage. Also, a part of the product and related equipment may become hot and cause burns.

Do not drop, break, modify, puncture, gouge, burn, paint, or throw.
Doing so may cause fire, injury, electric shock, damage, malfunction, overheating, leakage, or rupture.

Do not carry out repairs by yourself, such as disassembly (removing parts, etc.), modification, soldering, etc.

- Doing so may cause fire, injury, electric shock, damage, malfunction, overheating, leakage, or rupture.
- Servicing, disassembly and repair should not be undertaken by people other than SoftBank Robotics or other service staff who has received training approved by SoftBank Robotics.

When connecting the battery cable to the product, check that the connectors are not damaged and that there is no foreign matter.
Do not try to forcibly connect the cable if it does not plug correctly. Doing so may cause fire, injury, electric shock, damage, malfunction, overheating, leakage or rupture, or damage and burn to the external connector.

⚠ WARNING

Do not get the product or battery wet.

- They are not water-resistant. Do not get them wet.
- Use them in an environment with less than 80% humidity. Otherwise, it may cause fire, electric shock, or malfunction. Do not use them in a humid place such as a bathroom, washroom or where the product and related equipment may be exposed to water. Also do not use them with wet hands.
- In case a liquid, such as water or animal urine, enters inside the product, leaving the product wet or charging it while it is wet may cause overheating, electric shock, fire, injury, or a malfunction. Pay attention to the location where the product is used and how it is handled.

Do not drop them when moving or transporting them.
Otherwise, it may cause fire, injury, electric shock, damage, malfunction, overheating, leakage, or rupture, as well as damage to surrounding objects.

Do not expose to warm air from a dryer to dry them, bring them to a sauna, or spill boiling water on them.
Otherwise, it may cause fire, injury, electric shock, damage, malfunction, overheating, leakage, or rupture..

If you notice anything unusual, such as noise, smoke, or odor while using or charging the product, disconnect the cable (power cable) that connects the battery to Whiz i.
Otherwise, it may cause fire, injury, electric shock, damage, malfunction, overheating, leakage, or rupture, as well as damage to the product and the battery.

Operators shall read this manual and thoroughly understand how to use the product correctly before using it.
Otherwise, it may cause an injury.

This product is for indoor use only. Do not use outside such as on a street.
This product is solely designed for indoor use. If used outside, malfunction, damage, or destruction of parts due to natural elements, as well as other unexpected behavior are expected as the product is not designed for an outdoor operating environment.

Do not allow a liquid (tap water, drinks, seawater, animal urine, etc.), conductive foreign matter (pencil core, metal fragment, metal necklace, hairpin, etc.) or a finger to enter inside or come into contact with the charging connectors or external connectors (notification pager charging connector, etc.).
Otherwise, it may cause fire, injury, electric shock, damage, malfunction, overheating, leakage, or rupture.

⚠ CAUTION

Do not touch for a long time the battery when recharging it. Be careful when handling the product during or just after charging.
Otherwise, it may cause low-temperature burns. If prolonged contact causes skin irritation (itchiness, rash, eczema, etc.), immediately stop using the product and consult a doctor.

Children should be supervised to ensure that they do not play with the product.
Otherwise, it may cause an injury.

NOTE

Store the product inside a building.
Otherwise, it may cause a malfunction or damage to the surrounding objects.

2-5 Handling the Product

⚠ WARNING

If the product cannot start because it is inoperable, does not turn on, or for another reason, move the machine to a safe place far from emergency exits, fire extinguishers, and hydrants. Press the emergency stop button to prevent unintentional start of the machine.

Do not operate the product in a way that is not described in the operational manual (this document).
Otherwise, it may cause death, injury, or malfunction, as well as damage to the surrounding objects.

Pay attention so that infants, children, or pets do not touch the product.
Otherwise, it may cause an injury due to getting caught in the machine.

If you notice anything unusual, such as noise, smoke, or odor, when using the product, immediately disconnect the battery cable and contact the seller.
Otherwise, it may cause fire, injury, electric shock, damage, malfunction, overheating, leakage, or rupture.

NOTE

Use the product within the 0°C to 40°C temperature range, and 10% to 80% humidity range. Store the product in a dry place without dust between 0°C to 40°C.
Otherwise, it may cause a malfunction or damage to the surrounding objects.

Do not expose the product to dust in large quantity, sand, snow, ice, water, humidity, saltwater environments, or brine mist (example: ocean environment, shore environment, etc.).
This product is solely designed for indoor use. If used outside, malfunction, damage, or destruction of parts due to natural elements, as well as other unexpected behavior and damage to surrounding objects are expected.

Do not place any decorations or objects on the machine that may hinder the product's operation.
Otherwise, it may cause a malfunction or failure.

The product is designed to detect a dedicated IC tag. Do not use it for any other purpose.
Otherwise, it may cause a malfunction or damage to the surrounding objects.

Do not remove the sticker and cover sticker of the dedicated IC tag attached to the tag pole or satellite tag.
Otherwise, it may cause the machine to fall from the escalator or enter the restricted area.

Do not force the shutter into place or secure it with tape or other things when it is closed.
Otherwise, it may cause the machine to fall from the escalator or enter the restricted area.

If you will not be using the product for a long period, disconnect the battery cable from this product before storing it.
Otherwise, it may cause a malfunction or damage to the surrounding objects.

2-6 Handling the Battery

DANGER

Do not use the battery in or near locations with dust, salt, corrosive gas, or inflammable gas.
Otherwise, it may cause fire, injury, electric shock, damage, malfunction, overheating, leakage, or rupture.

WARNING

Before using the battery, understand the content of the operational manual (this document) to use it correctly.
Otherwise, it may cause death, injury, or malfunction, as well as damage to the surrounding objects.

Check that the voltage of the power source is suitable for the charger. Do not use any power source or voltage other than what is specified (AC 100 to 240 V, 50 to 60 Hz).
Otherwise, it may cause fire, injury, electric shock, damage, malfunction, overheating, leakage, or rupture.

Do not use in a dusty place and do not allow dirt or other foreign matter to adhere to the battery. If the power plug is dusty, unplug it from the outlet and wipe it with a dry cloth.
Otherwise, it may cause fire, injury, electric shock, damage, malfunction, overheating, leakage, or rupture.

Do not use the battery or the power cable if damaged.
Otherwise, it may cause fire, injury, electric shock, damage, malfunction, overheating, leakage, or rupture.

Always unplug the power cable from the outlet if you will carry out maintenance or not be using the battery for a long period.
Otherwise, it may cause fire, injury, electric shock, damage, malfunction, overheating, leakage, or rupture.

If the battery is not operating normally, takes a longer time to recharge than normal, or if it produces sparks, smoke, a strange odor, etc., immediately unplug the power cable from the outlet and contact the seller.
Otherwise, it may cause fire, injury, electric shock, damage, malfunction, overheating, leakage, or rupture.

Do not step on the power cable or otherwise subject it to excessive force when it is connected to the battery.
Otherwise, it may break the terminals of the power cable and cause a malfunction or fire.

Do not drop or step on the battery. Do not subject the battery to excessive force, such as placing objects on it or stamping on it.
Otherwise, it may damage the battery and cause fire, injury, electric shock, damage, malfunction, overheating, leakage, or rupture.

Always hold the plug body and not the cord when unplugging the power plug.
Otherwise, it may break the power cable and cause an electric shock.

NOTE

Use the battery in ambient temperature according to the usage environment of the battery.
Otherwise, it may cause a malfunction or damage to the surrounding objects.

Do not use in a location where vibration or impact is applied.
Otherwise, it may cause a malfunction or damage to the surrounding objects.

If thunder is audible, unplug the battery from the outlet.
Otherwise, it may cause a malfunction or damage to the surrounding objects.

2-7 Handling near Electronic Medical Devices

DANGER

If wearing an implanted cardiac pacemaker or implanted defibrillator, use the product at a distance of 15 cm or longer from such devices.
Radio waves may affect the operation of the pacemaker or defibrillator.

NOTE

Do not use in a healthcare environment or near electronic medical devices.
*The product does not comply with UL or IEC 60601 standards (or equivalent standards).

2-8 Product Disposal and Recycling

The product you have purchased is designed and manufactured with recyclable, high-quality materials and components.

When disposing of the product, check that it is being disposed of properly as industrial waste differentiated from general and business waste according to regional and municipal regulations by request to an industrial waste disposal operator.

3 Names of Parts

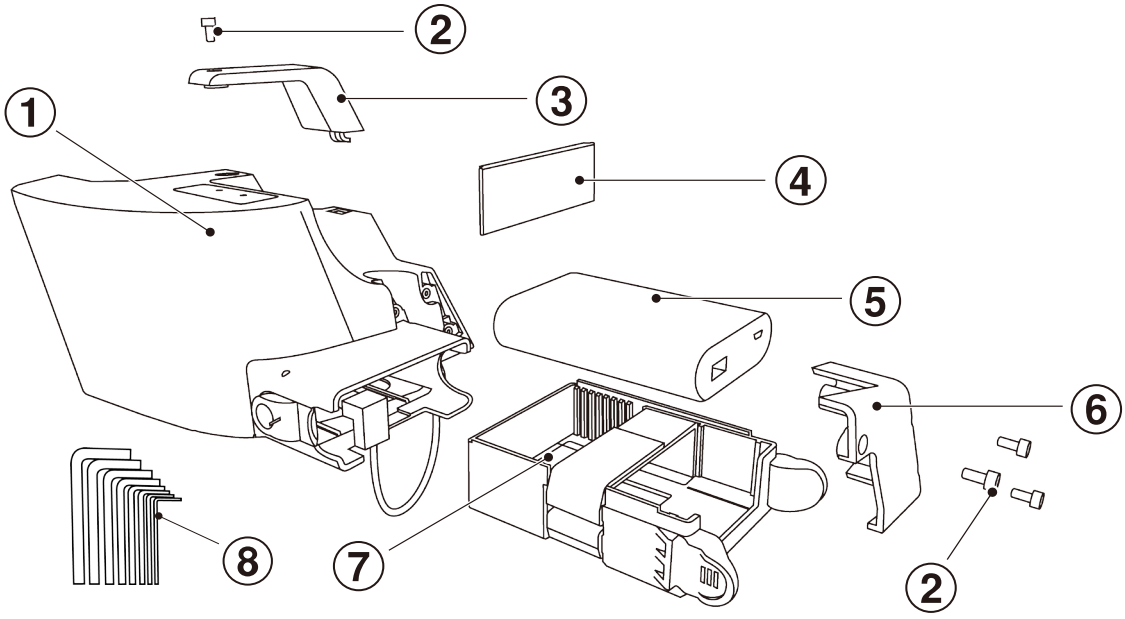

No	Item
①	Main part
②	Bolt
③	Upper-grip lock
④	Partition board
⑤	Mobile battery (Sold separately)
⑥	Side-grip lock
⑦	Battery holder
⑧	Hexagonal wrenches

4 LED lights

The LED lights on the top of the product provide information about the status and errors of the machine.

Colors and Patterns	Image	Description
Red and blue lights	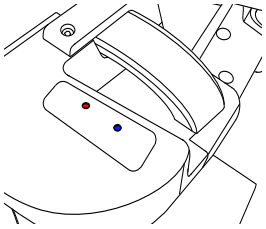	■ The product has been booted. ■ The product has detected the dedicated IC tag and is pausing. (The shutter is closed)
Flashing red	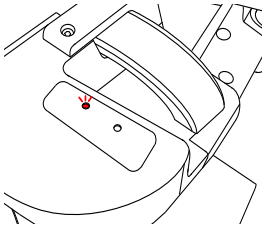	The product is not operating. (The shutter is closed)
Flashing blue	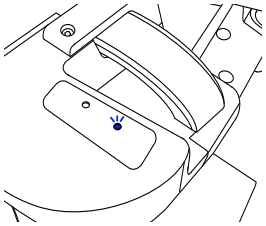	Autonomous cleaning can be performed. (The shutter is open)

- When the red light flashes, unplug and plug the cable connecting the product to the battery.
- When the product detects the dedicated IC tag and the red light turns on, move the machine to the Home Location Code and restart autonomous cleaning.

5 Preparation before Use

Set up the product before using it.

5-1 Charging the Product

Charge the battery. When charging the battery, remove it from the product before charging.

- It will take 3 to 4 hours to fully charge the battery.
- Please charge the battery of the product when charging the machine.

1 Remove the battery holder from the product

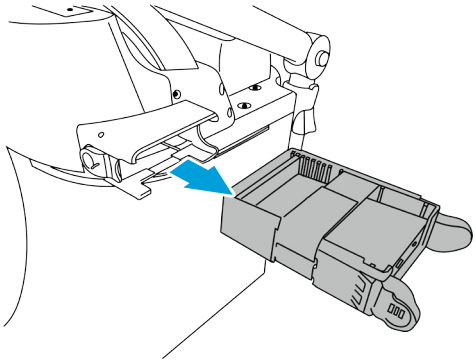

2 Plug the USB cable into the battery

Charge the battery with the battery in the battery holder.

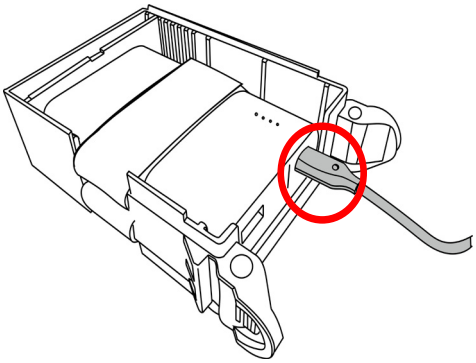

5-2 Installing tag poles / satellite tags

Install multiple tag poles and satellite tags with dedicated IC tags near escalators and on fixtures.

5-2-1 Installing the tag pole (only in limited areas)

1 Place the tag pole anywhere you need

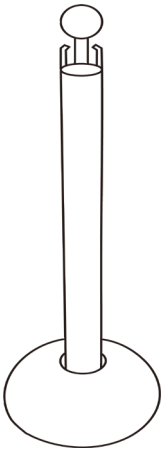

- The tag pole has a special IC tag sticker and cover sticker attached to it. Please do not remove them. It may cause the machine to fall from the escalator or enter the restricted area.

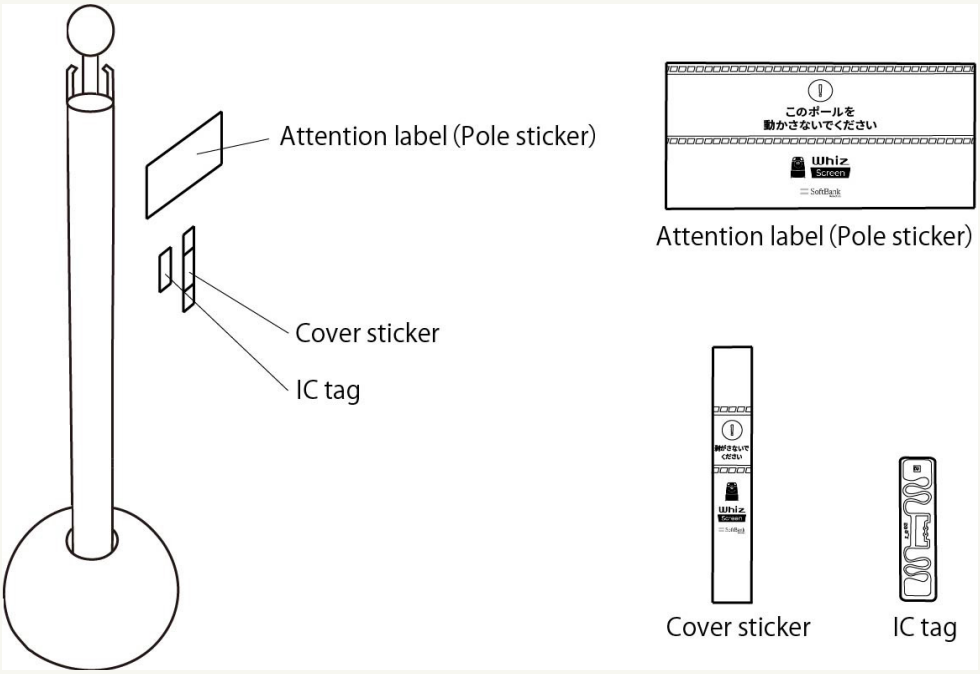

- Once installed in any location, do not move it from that spot. If you need to change the installation location, please contact customer support.

5-2-2 Installing satellite tags

When attaching a dedicated IC tag to a wall or fixture, use a satellite tag.

1 Place the satellite tag anywhere you need

- The satellite tag has a special IC tag sticker and a cover sticker attached to it. Please do not remove them. It may cause the machine to fall from the escalator or enter the restricted area.

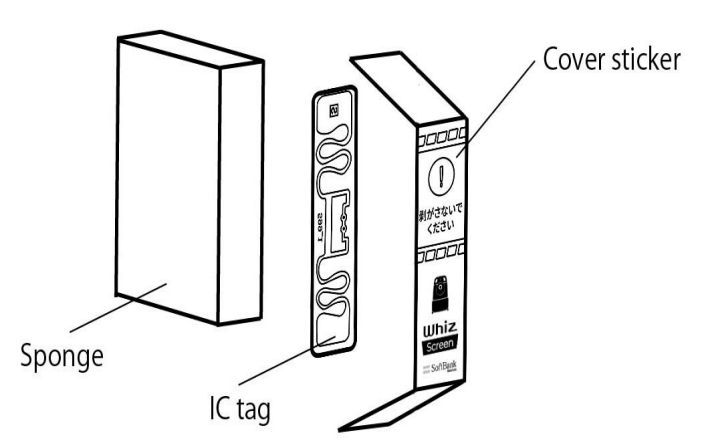

- The thickness of the satellite tag may vary depending on where it is attached.
- For more information on pasting satellite tags, please contact customer support.

5-3 Attaching the product to the machine

Attach the product to the lift grip.

1 Attach the main part to the lift grip from the front of the machine

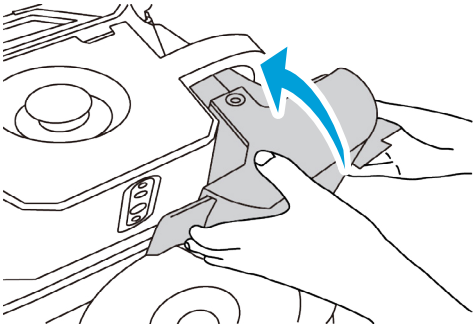

2 Install the upper-grip lock from the top of the product

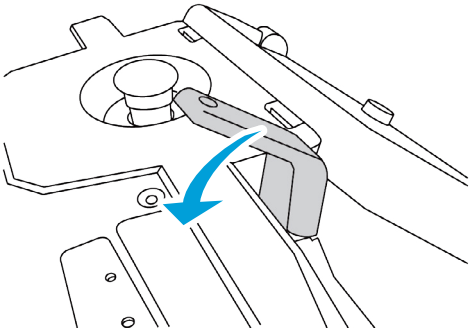

3 Fix the bolt with a hexagonal wrench (1 place)

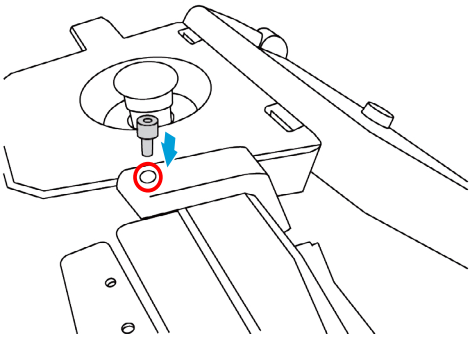

4 Attach the side-grip lock from the side of the product

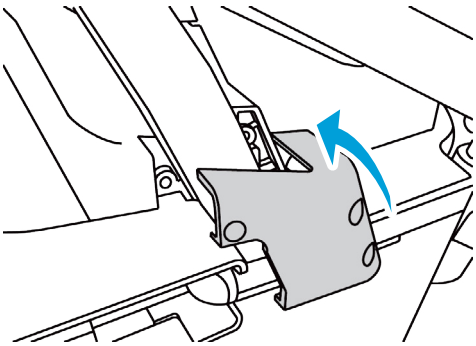

5 Fix the bolts with a hexagonal wrench (3 places)

- For Whiz, fix the bolts in two places.

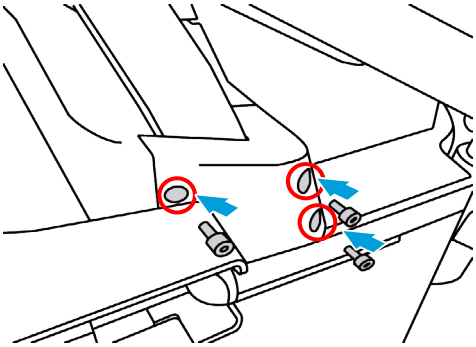

6 Using the product to perform autonomous cleaning

Use the product to perform autonomous cleaning. Before performing autonomous cleaning, make sure the batteries of the machine and the product are fully charged. If the batteries are not fully charged, recharge each battery first.

6-1 Installing the Battery

1 Remove the battery holder from the product

Remove the battery holder while holding the blue claw.

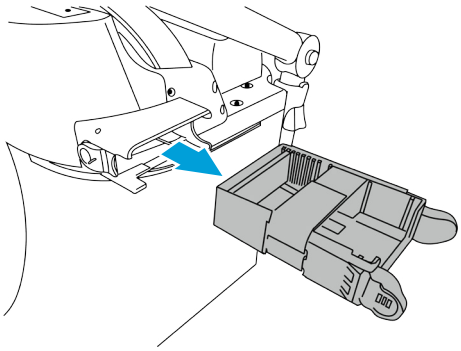

2 Place a fully charged battery into the battery holder

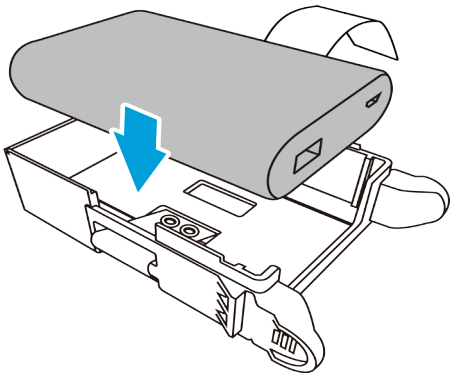

3 Adjust the position of the partition board to fix the position of the battery

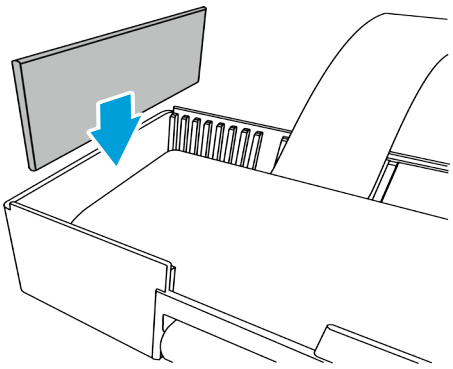

4 Fold the band over and roll it up

Wrap the band so that there is no excess length.

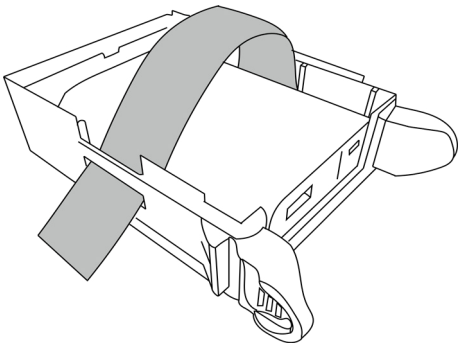

5 Insert the battery holder until it clicks into place, then attach it to the machine

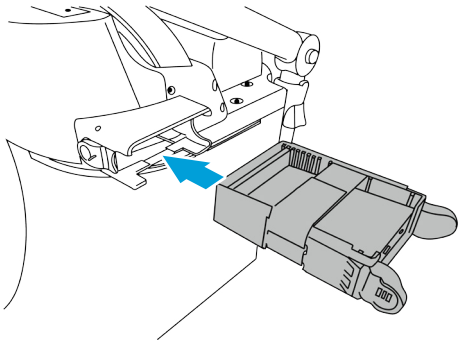

6-2 Turning the Power On

1 Plug the power cable of the product into the battery

The power turns on.

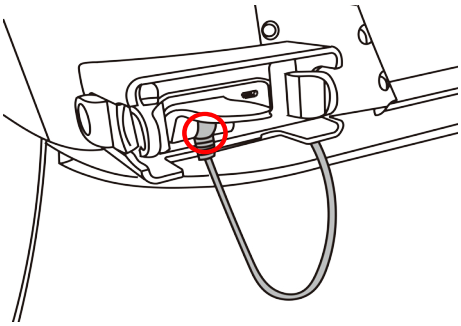

2 Check that the LED light of the product is flashing blue

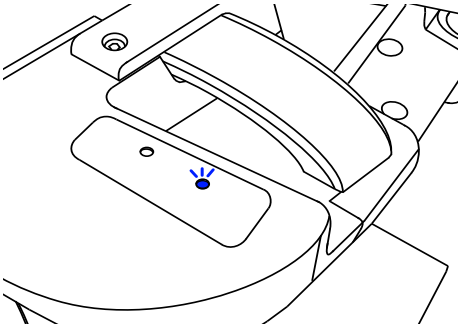

3 Confirm that the shutter of the product is open (the 2D/3D camera is not covered)

The shutter is open

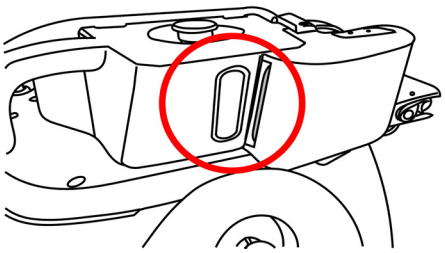

The shutter is closed

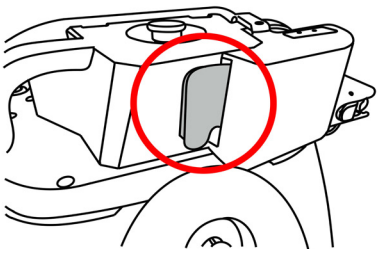

- Do not force the shutter into place or secure it with tape or other things when it is closed. Doing so may cause the machine to fall from the escalator or enter the restricted area.

6-3 Performing Autonomous Cleaning

1 Press the autonomous clean start/stop button to start autonomous cleaning

See the Whiz i Operational Manual for more information on autonomous cleaning.

- After the autonomous cleaning is complete, disconnect the power cable of the product from the battery holder and charge the battery.

7 Specifications and Compliance Information

7-1 Specifications

Item	Specification	
Product Name	Virtual wall barrier system	
Model ID	P00107101	P00107401
Designed for	Whiz (A00000101A01)	Whiz i (A00041301)
Rating	5.0V, 0.8A	
Size(mm)	223 x 236 x 139	200 x 248 x 141
Operating Temperature	0 ~ 40℃ humidity of 10% to 80%	
Storage Environment	0 ~ 40℃ dry environment with no dust	
Reading Distance	Approx. 2.0 to 3.0m (JP) / 1.5 to 2.5m (EU) / 4.0 to 5.0m (US/HK/SG) ※ Evaluation conditions: Avery Dennison's Belt M730 attached to a pole. The reading distance is for reference only. It may vary depending on the actual environmental conditions.	
RFID Frequency	Japan: 920.6 - 923.0MHz EU: 865 - 868MHz US: 902 - 928MHz HK/SG: 920 - 925MHz	
Maximum Radio Output Power	27.0dBm	

7-2 Compliance Information

Product Name: Virtual wall barrier system

Model: P00107101/P00107401

Japan

Whiz Screen uses 920MHz band wireless communication.

About conformity certification based on the Radio Law

- This product has built-in radio equipment that has received construction design certification as a specified low power radio station based on the Radio Law.

  Ⓡ 011-180006

  Radio station permission is not required to use this product. Also, it can be used only in Japan.
- This product has been certified as a factory design, so disassembling / modifying it may be punished by law.

EU

SAFETY PRECAUTIONS

Please read the safety precautions carefully to ensure the correct use of.

- Do not disassemble, modify or repair the device or the battery by yourself, otherwise the warranty will be invalid.
- Do not crush, throw, or puncture your device. Avoid dropping, squeezing, or bending your device.
- Do not use your device in a moist environment.
- The operating temperature should be +0℃—+40℃ .
- Do not expose your device to areas with flammables and explosives.
- Do not turn on your device when it is prohibited to use.
- Use a dry soft cloth to clean the device; do not use water, alcohol, detergent or any chemicals.
- Keep the device battery and charger out of the reach of children to prevent them from swallowing it or injuring themselves by accident.
- Children should only use the device with adult supervision.
- Observe all rules and regulations applicable to mobile products in hospitals and health care facilities.

- Do not dispose of used devices in a household rubbish bin.
- The device is connected to a USB interface of version USB2.0.

- A minimum separation 20cm distance must be maintained between the user's body and the device, including the antenna during body-worn operation, to comply with RF exposure requirements.

- RED 2014/53/EU requires that for products which could potentially have an issue with a non-harmonized frequency in a specific EU country, the product documentation must list the restrictions, and the packaging must carry a label reflecting that country's code

- According to RED 2014/53/EU article 10.2, this product has been so constructed that it can be operated in at least one Member State without infringing applicable requirements of the use of radio spectrum. This product can be used across EU member states.

	AT	BE	BG	HR	CY	CZ	DK
	EE	FI	FR	DE	EL	HU	IE
	IT	LV	LT	LU	MT	NL	PL
	PT	RO	SK	SI	ES	SE	UK

United States

Model: P00107101/P00107401

FCC ID: 2ATI9-P00107

FCC Compliance

This equipment has been tested and found to comply with the limits for a Class B digital device, pursuant to Part 15 of the FCC Rules. These limits are designed to provide reasonable protection against harmful interference in a residential installation. This equipment generates uses and can radiate radio frequency energy and, if not installed and used in accordance with the instructions, may cause harmful interference to radio communications. However, there is no guarantee that interference will not occur in a particular installation. If this equipment does cause harmful interference to radio or television reception, which can be determined by turning the equipment off and on, the user is encouraged to try to correct the interference by one of the following measures:

---Reorient or relocate the receiving antenna.

---Increase the separation between the equipment and receiver.

---Connect the equipment into an outlet on a circuit different from that to which the receiver is connected.

---Consult the dealer or an experienced radio/TV technician for help.

“Changes or modifications not expressly approved by the party responsible for compliance could void the user's authority to operate the equipment.”

This device complies with part 15 of the FCC Rules. Operation is subject to the following two conditions:

1. This device may not cause harmful interference, and
2. This device must accept any interference received, including interference that may cause undesired operation.

Singapore

Complies with Singapore IMDA standards.

Complies with
IMDA standards
DB107234

Hong Kong

Complies with Hong Kong OFCA standards.

Revision History
March 2022 : First edition

SoftBank Robotics Corp.