FCC TEST REPORT

For

CHINALIGHT SHENZHEN IMPORT & EXPORT COMPANY LTD

Wireless microphone

Test Model: VHF 210.3

Prepared for	:	CHINALIGHT SHENZHEN IMPORT & EXPORT COMPANY LTD
Address	:	12th floor, foreign Trade Light Industrial Building No. 1002 Ai-Guo Road, ShenZhen, China
Prepared by	:	Shenzhen LCS Compliance Testing Laboratory Ltd.
Address	:	1,2/F, Building A, Juji Industrial Park, Yabianxueziwei, Shajing Street, Baoan District, Shenzhen, Guangdong, China
Tel	:	(+86)755-82591330
Fax	:	(+86)755-82591332
Web	:	www.LCS-cert.com
Mail	:	webmaster@LCS-cert.com
Date of receipt of test sample	:	October 12, 2019
Number of tested samples	:	1
Serial number	:	Prototype
Date of Test	:	October 13, 2019~ October 21, 2019
Date of Report	:	October 22, 2019

This report shall not be reproduced except in full, without the written approval of Shenzhen LCS Compliance Testing Laboratory Ltd.

FCC TEST REPORT
FCC CFR 47 PART 74

Report Reference No.	**:**	**LCS191008056AEA**
Date of Issue.....	:	October 22, 2019
Testing Laboratory Name.....	**:**	**Shenzhen LCS Compliance Testing Laboratory Ltd.**
Address.....	:	1,2/F, Building A, Juji Industrial Park, Yabianxueziwei, Shajing Street, Baoan District, Shenzhen, Guangdong, China
Testing Location/ Procedure.....	:	Full application of Harmonised standards ■ Partial application of Harmonised standards □ Other standard testing method □
Applicant's Name.....	**:**	**CHINALIGHT SHENZHEN IMPORT & EXPORT COMPANY LTD**
Address.....	:	12th floor, foreign Trade Light Industrial Building No. 1002 Ai-Guo Road, ShenZhen, China
Test Specification		
Standard.....	:	FCC CFR 47 PART 74
Test Report Form No.....	**:**	LCSEMC-1.0
TRF Originator.....	:	Shenzhen LCS Compliance Testing Laboratory Ltd.
Master TRF.....	:	Dated 2011-03

Shenzhen LCS Compliance Testing Laboratory Ltd. All rights reserved.
This publication may be reproduced in whole or in part for non-commercial purposes as long as the Shenzhen LCS Compliance Testing Laboratory Ltd. is acknowledged as copyright owner and source of the material. Shenzhen LCS Compliance Testing Laboratory Ltd. takes no responsibility for and will not assume liability for damages resulting from the reader's interpretation of the reproduced material due to its placement and context.

EUT Description.....	**:**	Wireless microphone
Trade Mark.....	:	N/A
Model/ Type reference.....	:	VHF 210.3
Ratings.....	:	DC 3.0V by 2*AA batteries
Result	:	**Positive**

Compiled by:	**Supervised by:**	**Approved by:**
Jerry Zeng	Aking Jin	Gavin Liang
Jerry Zeng / File administrators	Aking Jin / Technique principal	Gavin Liang/ Manager

FCC -- TEST REPORT

Test Report No. : LCS191008056AEA	October 22, 2019 Date of issue

Type / Model.....	: VHF 210.3
EUT.....	: Wireless microphone
Applicant.....	**: CHINALIGHT SHENZHEN IMPORT & EXPORT COMPANY LTD**
Address.....	: 12th floor, foreign Trade Light Industrial Building No. 1002 Ai-Guo Road, ShenZhen, China
Telephone.....	: /
Fax.....	: /
Manufacturer.....	**: GUANGZHOU DBL ELECTRONICS CO., LTD**
Address.....	: No.3 Yuanxia Industrial park Longgui Town, Baiyun District, Guangzhou, China 510445
Telephone.....	: /
Fax.....	: /
Factory.....	**: /**
Address.....	: /
Telephone.....	: /
Fax.....	: /

Test Result	**Positive**

The test report merely corresponds to the test sample.

It is not permitted to copy extracts of these test result without the written permission of the test laboratory.

Revision History

Revision	Issue Date	Revisions	Revised By
000	October 22, 2019	Initial Issue	Gavin Liang

This report shall not be reproduced except in full, without the written approval of Shenzhen LCS Compliance Testing Laboratory Ltd.

TABLE OF CONTENTS

1. GENERAL INFORMATION....6
1.1. DESCRIPTION OF DEVICE (EUT)....6
1.2. HOST SYSTEM CONFIGURATION LIST AND DETAILS....7
1.3. EXTERNAL I/O CABLE....7
1.4. DESCRIPTION OF TEST FACILITY....7
1.5. STATEMENT OF THE MEASUREMENT UNCERTAINTY....7
1.6. MEASUREMENT UNCERTAINTY....7
1.7. DESCRIPTION OF TEST MODES....8
1.8. FREQUENCY OF CHANNELS....8
2. TEST METHODOLOGY....9
2.1. EUT CONFIGURATION....9
2.2. EUT EXERCISE....9
2.3. GENERAL TEST PROCEDURES....9
3. SYSTEM TEST CONFIGURATION....10
3.1. JUSTIFICATION....10
3.2. EUT EXERCISE SOFTWARE....10
3.3. SPECIAL ACCESSORIES....10
3.4. BLOCK DIAGRAM/SCHEMATICS....10
3.5. EQUIPMENT MODIFICATIONS....10
3.6. TEST SETUP....10
4. SUMMARY OF TEST RESULTS....11
5. TEST RESULT....12
5.1. TRANSMITTER OUTPUT POWER....12
5.2. OCCUPIED BANDWIDTH AND EMISSION MASK....14
5.3. TRANSMITTER UNWANTED EMISSIONS(RADIATED OR CONDUCTED)....16
5.4. CONDUCTED SPURIOUS EMISSION....19
5.5.FREQUENCY STABILITY....20
5.6.MODULATION CHARACTERISTICS....22
5.7.NECESSARY BANDWIDTH (BN) FOR ANALOGUE SYSTEMS....24
6. LIST OF MEASURING EQUIPMENTS....26
7. TEST SETUP PHOTOGRAPHS OF EUT....27
8. EXTERIOR PHOTOGRAPHS OF THE EUT....27
9. INTERIOR PHOTOGRAPHS OF THE EUT....27

This report shall not be reproduced except in full, without the written approval of Shenzhen LCS Compliance Testing Laboratory Ltd.

1. GENERAL INFORMATION

1.1. Description of Device (EUT)

EUT	: Wireless microphone
Test Model	: VHF 210.3
Hardware version	: HG-W07.PCB
Software version	: V1.0
Power Supply	: DC 3.0V by 2*AA batteries
Wireless Microphone	
Operation frequency	: 210.3MHz
Modulation Type	: FM
Channel Number	: 1
Equipment category	: Category 3
Antenna Type	: Ceramic Antenna
Antenna Gain	: 0dBi(Max.)

1.2. Host System Configuration List and Details

Manufacturer	Description	Model	Serial Number	Certificate
--	--	--	--	--

1.3. External I/O Cable

I/O Port Description	Quantity	Cable
--	--	--

1.4. Description of Test Facility

FCC Registration Number is 254912.
Industry Canada Registration Number is 9642A-1.
EMSD Registration Number is ARCB0108.
UL Registration Number is 100571-492.
TUV SUD Registration Number is SCN1081.
TUV RH Registration Number is UA 50296516-001.
NVLAP Accreditation Code is 600167-0.
FCC Designation Number is CN5024
CAB identifier: CN0071

1.5. Statement of the Measurement Uncertainty

The data and results referenced in this document are true and accurate. The reader is cautioned that there may be errors within the calibration limits of the equipment and facilities. The measurement uncertainty was calculated for all measurements listed in this test report acc. To CISPR 16 – 4 “Specification for radio disturbance and immunity measuring apparatus and methods – Part 4: Uncertainty in EMC Measurements” and is documented in the LCS quality system acc. To DIN EN ISO/IEC 17025. Furthermore, component and process variability of devices similar to that tested may result in additional deviation. The manufacturer has the sole responsibility of continued compliance of the device.

1.6. Measurement Uncertainty

Test Item		Frequency Range	Uncertainty	Note
Radiation Uncertainty	:	9KHz~30MHz	±3.10dB	(1)
		30MHz~200MHz	±2.96dB	(1)
		200MHz~1000MHz	±3.10dB	(1)
		1GHz~26.5GHz	±3.80dB	(1)
		26.5GHz~40GHz	±3.90dB	(1)
Conduction Uncertainty	:	150kHz~30MHz	±1.63dB	(1)
Power disturbance	:	30MHz~300MHz	±1.60dB	(1)

(1). This uncertainty represents an expanded uncertainty expressed at approximately the 95% confidence level using a coverage factor of k=2.

1.7. Description of Test Modes

The EUT has been tested under operating condition.

This test was performed with EUT in X, Y, Z position and the worst case was found when EUT in X position.

1.8. Frequency of Channels

Channel No.	Frequency(MHz)
1	210.3

2. TEST METHODOLOGY

All measurements contained in this report were conducted with ANSI C63.26-2015:American National Standard for Compliance Testing of Transmitters Used in Licensed Radio Services

The radiated testing was performed at an antenna-to-EUT distance of 3 meters. All radiated and conducted emissions measurement was performed at Shenzhen LCS Compliance Testing Laboratory Ltd.

2.1. EUT Configuration

The EUT configuration for testing is installed on RF field strength measurement to meet the Commissions requirement and operating in a manner that intends to maximize its emission characteristics in a continuous normal application.

2.2. EUT Exercise

The EUT was operated in the engineering mode to fix the TX frequency that was for the purpose of the measurements.

According to its specifications, the EUT must comply with the requirements of the Section FCC Rules Part 74.

2.3. General Test Procedures

2.3.1 Radiated Emissions

please refer to radated spurious emission

3. SYSTEM TEST CONFIGURATION

3.1. Justification

The system was configured for testing in a continuous transmits condition.

3.2. EUT Exercise Software

The system was configured for testing in a continuous transmits condition;and transmission frequency by switch button control.

3.3. Special Accessories

N/A

3.4. Block Diagram/Schematics

Please refer to the related document

3.5. Equipment Modifications

Shenzhen LCS Compliance Testing Laboratory Ltd. has not done any modification on the EUT.

3.6. Test Setup

Please refer to the test setup photo.

4. SUMMARY OF TEST RESULTS

Applied Standard: FCC Part 15 Subpart C		
FCC Rules	Description of Test	Result
FCC Part 74.861(e)(1)(ii) FCC Part 2.1046	Maximum Conducted Output Power	Compliant
FCC Part 74.861 (e)(5) FCC Part 2.1049	Occupied Bandwidth	Compliant
FCC Part 74.861 (e)(4) FCC Part 2.1055	Frequency error	Compliant
FCC Part 74.861(e)(6) 2.1053	Transmitter unwanted emissions(radiated or conducted)	Compliant
FCC Part 2.1049 FCC Part 2.1047	Modulation characteristic	Compliant
FCC Part 74.861 (e)(7) FCC Part 2.1049	Necessary bandwidth (BN) for analogue systems	Compliant

This report shall not be reproduced except in full, without the written approval of Shenzhen LCS Compliance Testing Laboratory Ltd.

5. TEST RESULT

5.1. Transmitter output power

5.1.1. Measurement description:

Two traces are captured to show the difference between input- and output signals and to measure the effective output power of the device. Trace 1 shows the measurement results of the output signal and trace 2 shows the measurement results of the input signal. Marker D2 in the plots shows the difference between the input and the output signal

5.1.2. Measurement:

Measurement parameter	
Detector:	Peak (worst case) / Average (RMS)
Sweep time:	Auto / 20s
Resolution bandwidth:	> emission bandwidth
Video bandwidth:	> resolution bandwidth
Span:	> 2 times emissions bandwidth
Trace mode:	Max. hold
EUT configuration:	Peak: Unmodulated carrier RMS: Modulate the transmitter with a 2.5 kHz tone at a level 16 dB higher than that required to produce a frequency deviation of ± 75 kHz, or to produce 50% of the manufacturer's rated deviation, whichever is less.

5.1.3. Limits:

FCC
174 MHz to 216 MHz 50mW (average) / 17 dBm (average)

5.1.4. Test result:

The EUT was programmed to be in continuously transmitting mode.

5.1.5. Test result

Test Mode	Channel	Frequency (MHz)	Measured Maximum Average Power(dBm)	Antenna Gain (dBi)	EIRP Power（dBm）	Limits EIRP (dBm)	Verdict
FM	1	210.3	5.891	0	5.891	17	PASS

Maximum Peak Output Power	
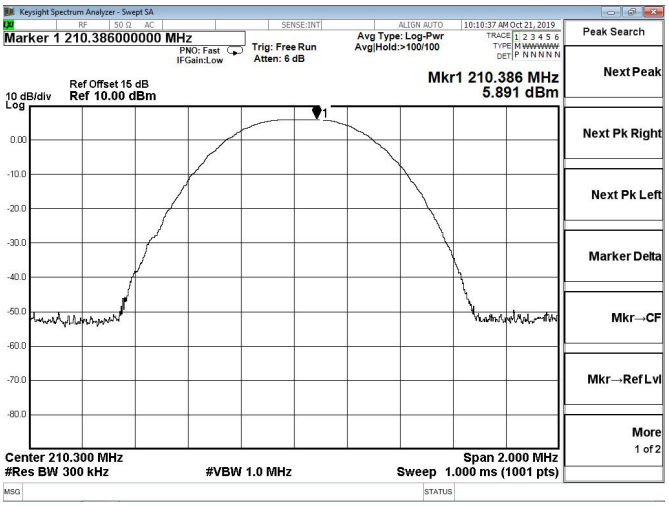	
Channel 1 / 210.3 MHz	

5.2. Occupied bandwidth and Emission Mask

5.2.1. Measurement description:

Two traces are captured to show the difference between input- and output signals and to measure the effective bandwidth of the output signal. Trace 1 shows the measurement results of the output signal and trace 2 shows the measurement results of the input signal.

5.2.2. Measurement:

Measurement parameter	
Detector:	Peak
Sweep time:	Auto
Resolution bandwidth:	1 % to 5 % of the occupied bandwidth
Video bandwidth:	3 x resolution bandwidth
Span:	2 x emission bandwidth
Trace mode:	Max. hold
Analyzer function:	99% power occupied bandwidth function
EUT:	Modulated signal with max. frequency deviation

5.2.3. Result:

Test Mode	Channel	Frequency (MHz)	99% Bandwidth (KHz)	Limits (KHz)	Verdict
FM	1	210.3	128.97	200	PASS

99% *Bandwidth*	
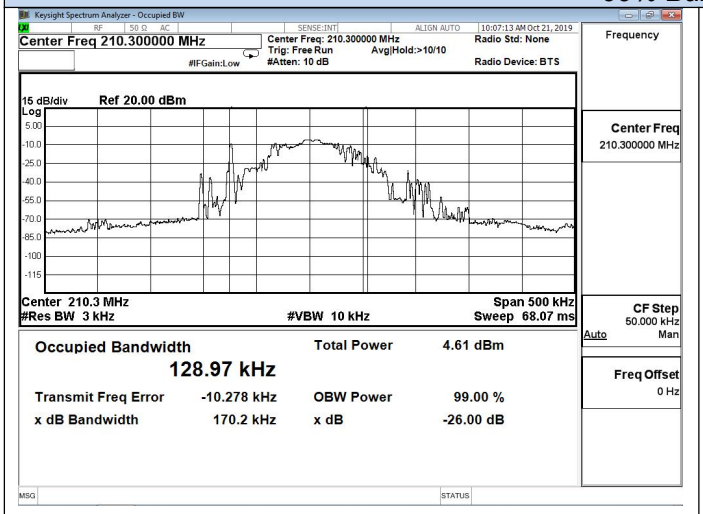	
Channel 1/ 210.3 MHz	

Spectrum mask

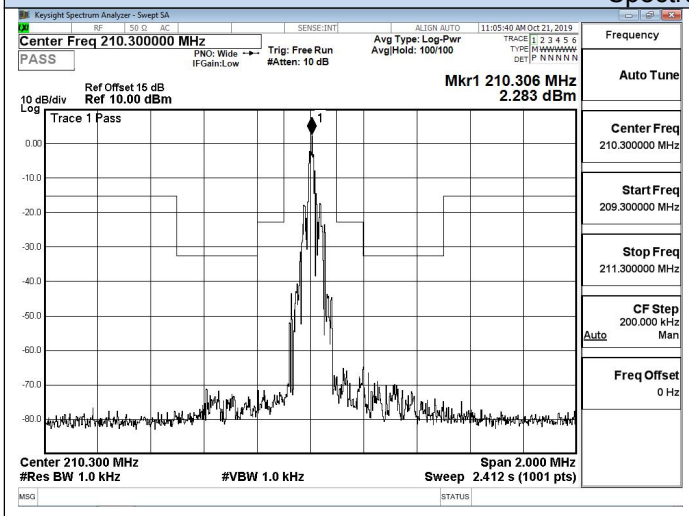

Channel 1 / 210.3 MHz

Spurious Emission on Antenna Port

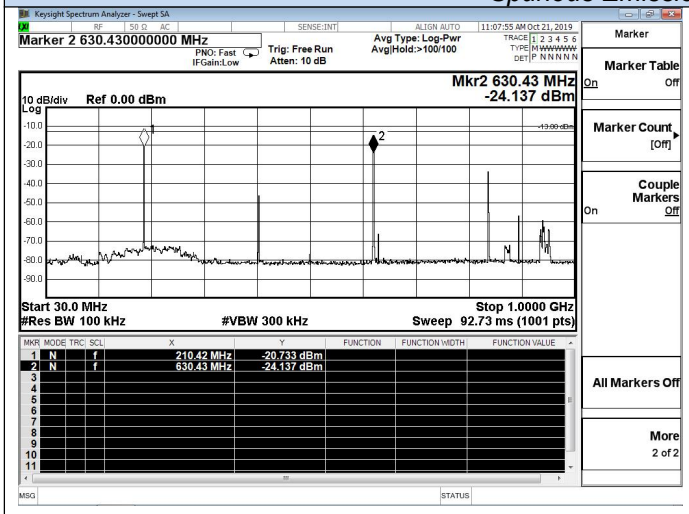

Channel 1 / 210.3 MHz

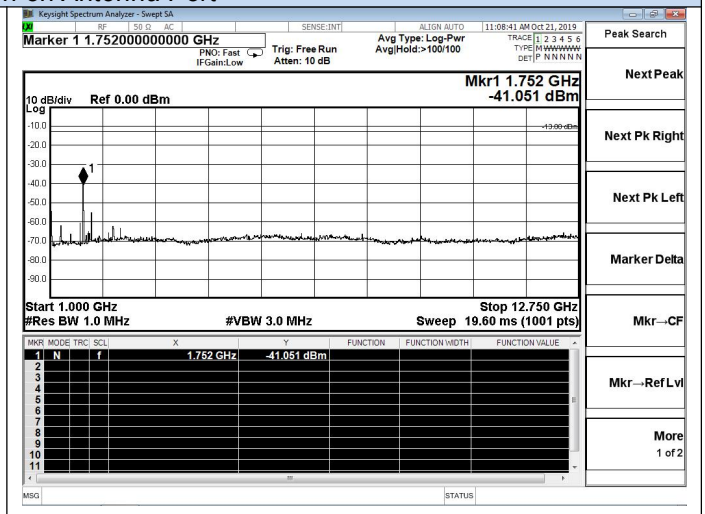

Channel 1 / 210.3 MHz

5.3. Transmitter unwanted emissions(radiated or conducted)

5.3.1. Measurement description:

TEST CONFIGURATION

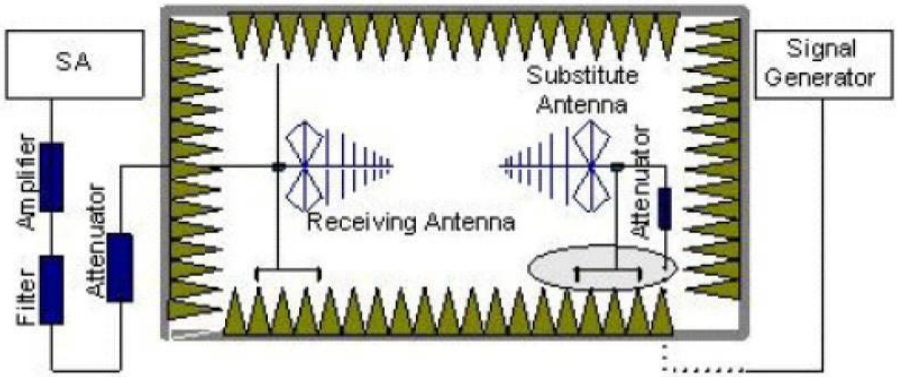

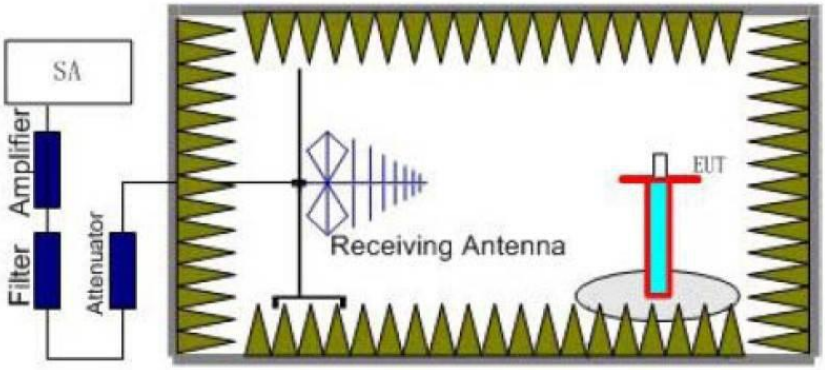

TEST PROCEDURE

1. EUT was placed on a 1.50 meter high non-conductive stand at a 3 meter test distance from the receive antenna. A receiving antenna was placed on the antenna mast 3 meters from the EUT for emission measurements. The height of receiving antenna is 1.50 m. Detected emissions were maximized at each frequency by rotating the EUT through 360° and adjusting the receiving antenna polarization. The radiated emission measurements of all transmit frequencies in three channels (High, Middle, Low) were measured with peak detector.
2. A log-periodic antenna or double-ridged waveguide horn antenna shall be substituted in place of the EUT. The log-periodic antenna will be driven by a signal generator and the level will be adjusted till the same power value on the spectrum analyzer or receiver. The level of the spurious emissions can be calculated through the level of the signal generator, cable loss, the gain of the substitution antenna and the reading of the spectrum analyzer or receiver.
3. The EUT is then put into continuously transmitting mode at its maximum power level during the test.Set Test Receiver or Spectrum RBW=1MHz,VBW=3MHz, And the maximum value of the receiver should be recorded as (P_r).
4. The EUT shall be replaced by a substitution antenna. In the chamber, an substitution antenna for the frequency band of interest is placed at the reference point of the chamber. An RF Signal source for the frequency band of interest is connected to the substitution antenna with a cable that has been constructed to not interfere with the radiation pattern of the antenna. A power (P_{Mea}) is applied to the input of the substitution antenna, and adjust the level of the signal generator output until the value of the receiver reach the previously recorded (P_r). The power of signal source (P_{Mea}) is recorded. The test should be performed by rotating the test item and adjusting the receiving antenna polarization.

5. A amplifier should be connected to the Signal Source output port. And the cable should be connect between the Amplifier and the Substitution Antenna. The cable loss (P_{cl}) ,the Substitution Antenna Gain (G_a) and the Amplifier Gain (P_{Ag}) should be recorded after test.
   The measurement results are obtained as described below:
   Power(EIRP)=P_{Mea}- P_{Ag} - P_{cl} + G_a
6. This value is EIRP since the measurement is calibrated using an antenna of known gain (2.15 dBi) and known input power.
7. ERP can be calculated from EIRP by subtracting the gain of the dipole, ERP = EIRP -2.15dBi.
8. In order to make sure test results more clearly,we set frequency range and sweep time for difference frequency range as follows table:

TEST LIMITS

FCC & IC	
The mean power of emissions shall be attenuated below the mean output power of the transmitter in accordance with the following schedule:	
On any frequency removed from the operating frequency by more than 50 percent up to and including 100 percent of the authorized bandwidth: at least	25 dB
On any frequency removed from the operating frequency by more than 100 percent up to and including 250 percent of the authorized bandwidth	35 dB
On any frequency removed from the operating frequency by more than 250 percent of the authorized bandwidth: at least	43 + 10log10 (mean output power in watts) dB

5.3.2. Results for Radiated Emissions

Test Frequency (MHz)	Frequency (MHz)	P_{Mea} (dBm)	P_{cl} (dB)	Distance (m)	G_a Antenna Gain(dBi)	Peak EIRP (dBm)	Limit (dBm)	Margin (dB)	Pol.
210.3	415.62	-31.06	3.54	3.00	12.87	-21.73	-13.00	8.73	V
	1101.00	-30.92	4.21	3.00	15.48	-19.65	-13.00	6.65	V
	1651.50	-37.83	4.52	3.00	17.32	-25.03	-13.00	12.03	V
	2202.00	-44.81	5.24	3.00	18.76	-31.29	-13.00	18.29	V
	415.62	-37.80	3.54	3.00	12.87	-28.47	-13.00	15.47	H
	1101.00	-30.84	4.21	3.00	15.48	-19.57	-13.00	6.57	H
	1651.50	-39.66	4.52	3.00	17.32	-26.86	-13.00	13.86	H
	2202.00	-40.81	5.24	3.00	18.76	-27.29	-13.00	14.29	H
	--	--	--	--	--	--	--	--	--

Remark:

1. *EIRP = P_{Mea}(dBm) - P_{cl}(dB) + G_a(dBi)*
2. *Margin = Limit - EIRP*
3. *-- Means other points for values lower than limits and not recorded.*
4. *The measurement frequency range is from 30MHz to the 10th harmonic of the fundamental frequency，and only recorded worst spurious emissions.*

5.4. Conducted spurious emission

5.4.1. Description:

Measurement of the conducted spurious emissions in transmit mode below 30 MHz. The EUT is set to channel 6. This measurement is repeated for DSSS and OFDM modulation. If peaks are found channel 1 and channel 11 will be measured too. The measurement is performed with the data rate producing the highest output power. Both power lines, phase and neutral line, are measured. Found peaks are re-measured with average and quasi peak detection to show compliance to the limits.

5.4.2. Measurement:

Measurement parameter	
Detector:	Peak - Quasi Peak / Average
Sweep time:	Auto
Resolution bandwidth:	F < 150 kHz: 200 Hz F > 150 kHz: 9 kHz
Video bandwidth:	F < 150 kHz: 1 kHz F > 150 kHz: 100 kHz
Span:	9 kHz to 30 MHz
Trace mode:	Max Hold

5.4.3. Limits:

FCC		
Frequency (MHz)	Quasi-Peak (dBµV/m)	Average (dBµV/m)
0.15 – 0.5	66 to 56*	56 to 46*
0.5 – 5	56	46
5 – 30.0	60	50

5.4.4. Results:

Not Applicable.

5.5.Frequency Stability

Test Requirement:FCC CFR 47 Part 74.e) 4)

Test Method:FCC CFR 47 Part 2.1055

Requirements:+/-50 ppm

(e) For low power auxiliary stations operating in the bands allocated for TV broadcasting, the following technical requirements apply:

(4) The frequency tolerance of the transmitter shall be 0.005 percent.

Test Procedure:

Frequency stability versus Environmental Temperature

The equipment under test was connected to an external DC power supply and the RF output was connected to a frequency counter via feed through attenuators.

The EUT was placed inside the temperature chamber. After the temperature stabilized for approximately 20 minutes, the frequency of the output signal was recorded from the counter.

Frequency Stability versus Input Voltage

At room temperature (25 ± 5°C), an external variable DC power supply was connected to the EUT. The frequency of the transmitter was measured for 115%, 100% and 85% of the nominal operating input voltage. For hand carried, battery powered equipment, reduce primary supply voltage to the battery operating end point which shall be specified by the manufacturer.

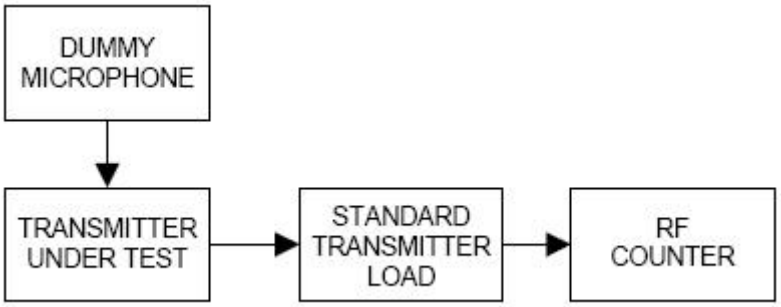

Test Result:

Assigned Frequency: 210.3000 MHz,		
Environment Temperature (°C)	Power Supplied (Vdc)	Frequency Measure with Time Elapsed Total emission within +/- 2.75 kHz
50	3.0	+2.58
40	3.0	+2.14
30	3.0	+1.76
20	3.0	+1.11
10	3.0	-1.35
0	3.0	-1.65
-10	3.0	-1.77
-20	3.0	-2.06
-30	3.0	-2.36
Environment Temperature (°C)	Power Supplied (Vdc)	Frequency Measure with Time Elapsed Total emission within Max +/- 2.75 kHz
25	3.0	+1.33
25	3.0	-1.69
25	2.7	-1.25

Battery end point: 2.7Vdc

The results: The unit does meet the FCC requirements.

Frequency Tolerance:

Mode	Channel	Frequency MHz	Measured MHz	Tolerance KHz	Result (%)	Limit (%)
FM	1	210.3	210.306	6	0.0029	0.005

5.6.Modulation Characteristics

Test Requirement:FCC CFR 47 Part 74.e) 3)

Test Method:FCC CFR 47 Part 2.1047 & TIA/EIA 603 E 2016:Land Mobile FM or PM Communications Equipment Measurement and Performance Standards

Requirements:

(e) For low power auxiliary stations operating in the bands allocated for TV broadcasting, the following technical requirements apply:

(3) Any form of modulation may be used. A maximum deviation of ±75 kHz is permitted when frequency modulation is employed.

Test Procedure:

Audio Frequency Response

The RF output of the transceiver was connected to the input of FSP 30 with FM deviation module through sufficient attenuation so as not to overload the meter or distort the reading. An audio signal generator was connected to the audio input of microphone.

The audio signal input level was adjusted to obtain 20% of the maximum rated system deviation at 1 kHz, and recorded as DEV REF . With the audio signal generator level unchanged, set the generator frequency between 100 to 5000 Hz. The transmitter deviations (DEV FREQ) were measured and the audio frequency response was calculated as 20log10 [DEV FREQ / DEV REF]

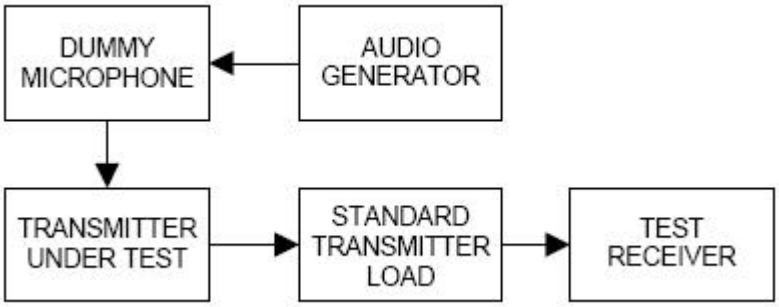

The plot(s) of Audio Frequency Response is presented hereinafter as reference.

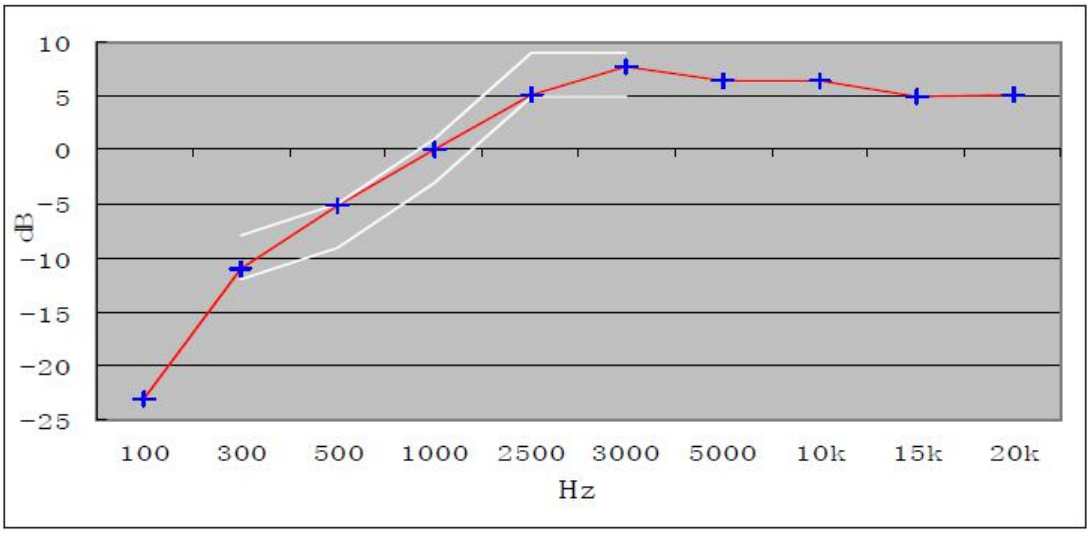

0dB=10mV at 1kHz (20% of the maximum rated system deviation).

Modulation Limiting

a) Adjust the transmitter per the manufacturer's procedure for full rated system deviation.
b) Set the test receiver to measure peak positive deviation. Set the audio bandwidth for ≤0.25 Hz to ≥15,000 Hz. Turn the de-emphasis function off.
c) Apply a **1000 Hz** modulating signal to the transmitter from the audio frequency generator, and adjust the level to obtain **60% of full rated system deviation**.
d) Increase the level from the audio frequency generator by 20 dB in one step (rise time between the 10% and 90% points shall be 0.1 second maximum).
e) Measure both the instantaneous and steady-state deviation at and after the time of increasing the audio input level.

With the level from the audio frequency generator held constant at the level obtained in step e), slowly vary the audio frequency from 100 to 15k Hz and observe the steady-state deviation. Record the maximum deviation.

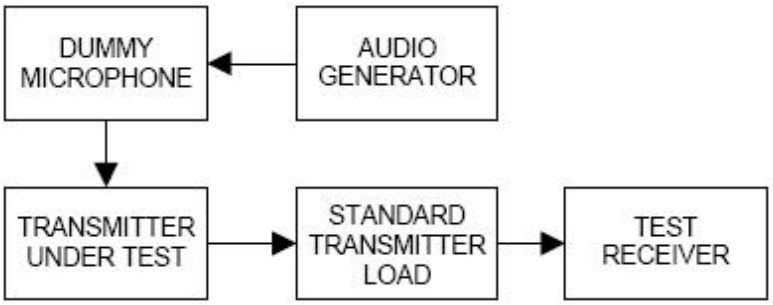

Test at five different modulating frequencies (100Hz ,300Hz, 500Hz, 1KHz, 2.5kHz, 5kHz, 10kHz，15kHz), the output level of the audio generator was varied up to 1V and the FM deviation level was recorded.

Positive peak deviation

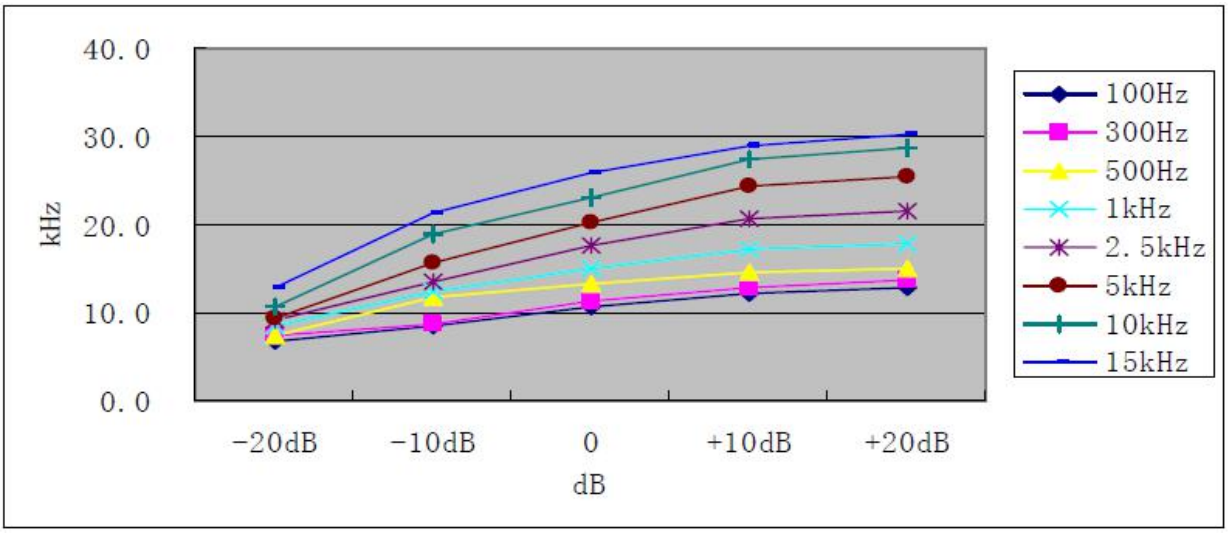

5.7.Necessary bandwidth (BN) for analogue systems

5.7.1.Measurement:

Measurement parameter	
Detector:	Peak - Quasi Peak / Average
Sweep time:	Auto
Resolution bandwidth:	1 kHz
Video bandwidth:	1 kHz
Span:	Fc-1MHz to fc+1MHz(2MHz)
Trace mode:	Max Hold

5.7.2.Limits:

FCC & IC
Signal within the spectrum mask: 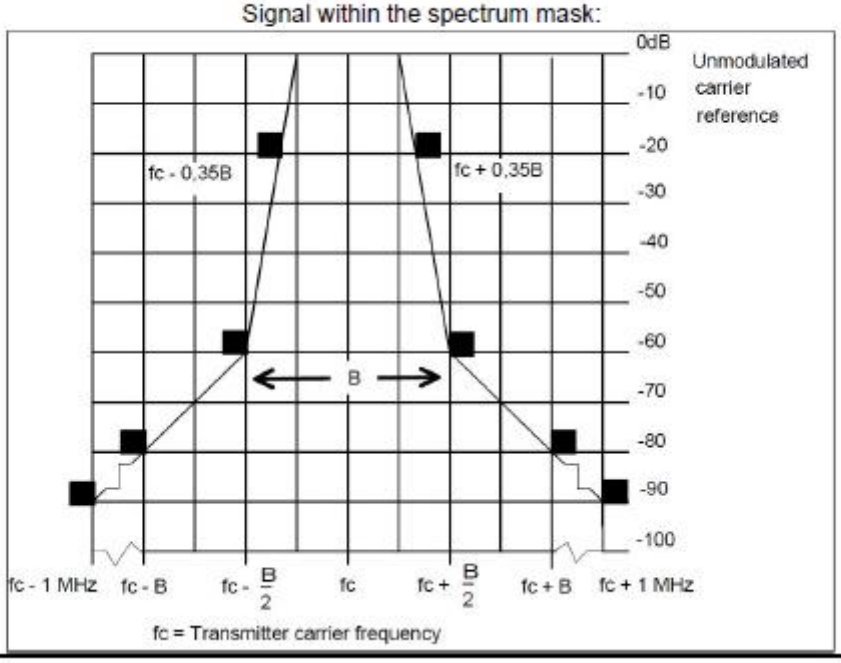

5.7.3. Results:

Necessary bandwidth	
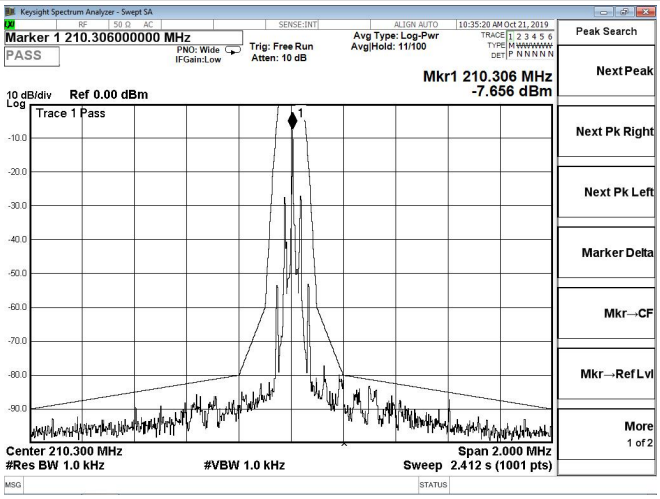	
Channe1 / 210.3 MHz	

6. LIST OF MEASURING EQUIPMENTS

Item	Equipment	Manufacturer	Model No.	Serial No.	Cal Date	Due Date
1	Power Meter	R&S	NRVS	100444	2019-06-11	2020-06-10
2	Power Sensor	R&S	NRV-Z81	100458	2019-06-11	2020-06-10
3	Power Sensor	R&S	NRV-Z32	10057	2019-06-11	2020-06-10
4	Test Software	Tonscend	JS1120-2	/	N/A	N/A
5	RF Control Unit	Tonscend	JS0806-2	N/A	2019-06-11	2020-06-10
6	MXA Signal Analyzer	Agilent	N9020A	MY50510140	2019-06-11	2020-06-10
7	DC Power Supply	Agilent	E3642A	N/A	2018-11-15	2019-11-14
8	EMI Test Software	AUDIX	E3	/	N/A	N/A
9	3m Semi Anechoic Chamber	SIDT FRANKONIA	SAC-3M	03CH03-HY	2019-06-12	2020-06-11
10	Positioning Controller	MF	MF-7082	N/A	2019-06-12	2020-06-11
11	Active Loop Antenna	SCHWARZBECK	FMZB 1519B	00005	2019-07-26	2020-07-25
12	By-log Antenna	SCHWARZBECK	VULB9163	9163-470	2019-07-26	2020-07-25
13	Horn Antenna	SCHWARZBECK	BBHA 9120D	9120D-1925	2019-07-02	2020-07-01
14	Broadband Horn Antenna	SCHWARZBECK	BBHA 9170	791	2019-09-20	2020-09-19
15	Broadband Preamplifier	SCHWARZBECK	BBV 9719	9719-025	2019-09-20	2020-09-19
16	EMI Test Receiver	R&S	ESR 7	101181	2019-06-12	2020-06-11
17	RS SPECTRUM ANALYZER	R&S	FSP40	100503	2018-11-15	2019-11-14
18	Broadband Preamplifier	/	BP-01M18G	P190501	2019-07-01	2020-06-30
19	RF Cable-R03m	Jye Bao	RG142	CB021	2019-06-12	2020-06-11
20	RF Cable-HIGH	SUHNER	SUCOFLEX 106	03CH03-HY	2019-06-12	2020-06-11
21	6dB Attenuator	/	100W/6dB	1172040	2019-06-11	2020-06-10
22	3dB Attenuator	/	2N-3dB	/	2019-06-11	2020-06-10
23	EMI Test Receiver	R&S	ESPI	101840	2019-06-11	2020-06-10
24	Artificial Mains	R&S	ENV216	101288	2019-06-12	2020-06-11
25	10dB Attenuator	SCHWARZBECK	MTS-IMP-136	261115-001-0032	2019-06-11	2020-06-10
Note: All equipment is calibrated through CHINA CEPREI LABORATORY and GUANGZHOU LISAI CALIBRATION AND TEST CO., LTD.						

7. TEST SETUP PHOTOGRAPHS OF EUT

Please refer to separated files for Test Setup Photos of the EUT.

8. EXTERIOR PHOTOGRAPHS OF THE EUT

Please refer to separated files for External Photos of the EUT.

9. INTERIOR PHOTOGRAPHS OF THE EUT

Please refer to separated files for Internal Photos of the EUT.

----------THE END OF REPORT----------