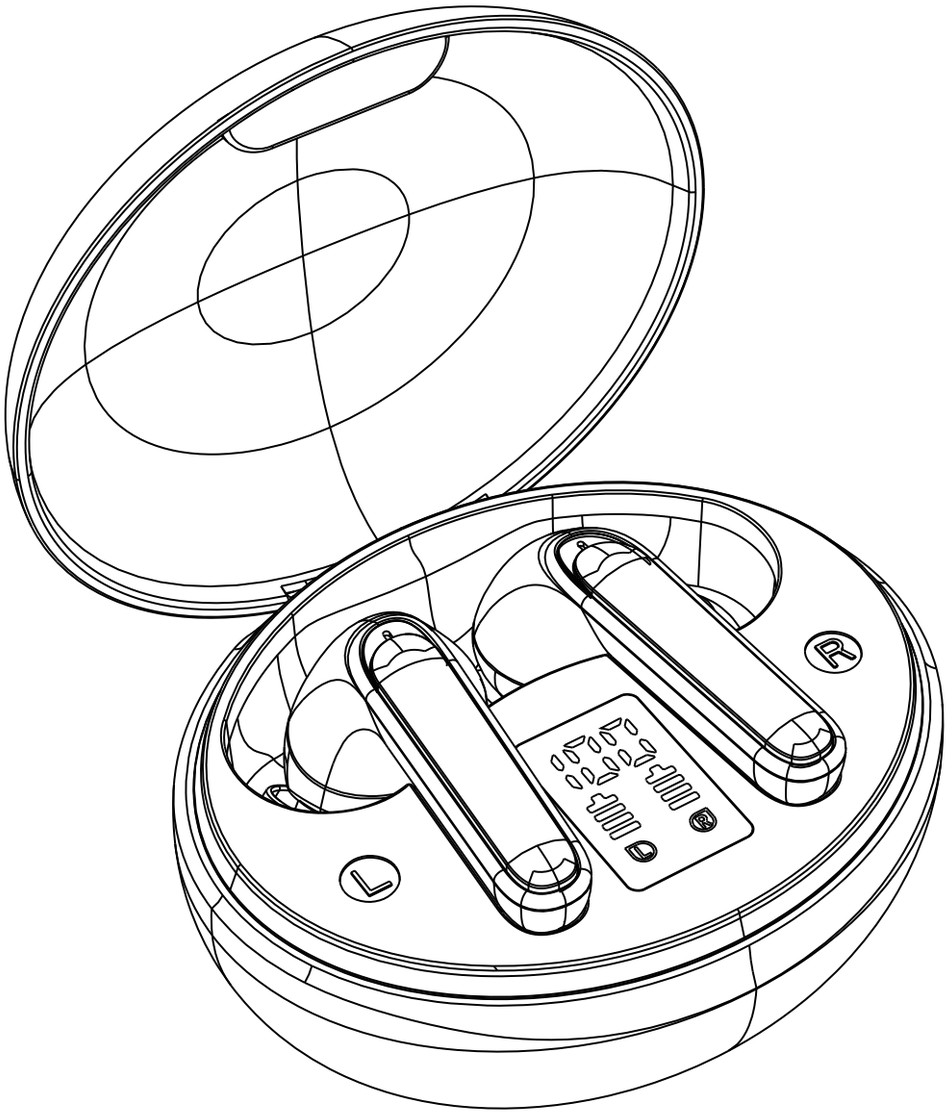

User Manual

True Wireless Earbuds

Statement

Thank you for purchasing the Tensky FlyPods True Wireless Earbuds. Please read this user manual carefully and keep it for future reference. If you need any assistance, please contact our support team with your product model number and Amazon order number.

Package Contents

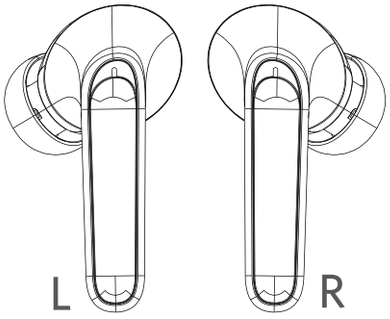

Earphones

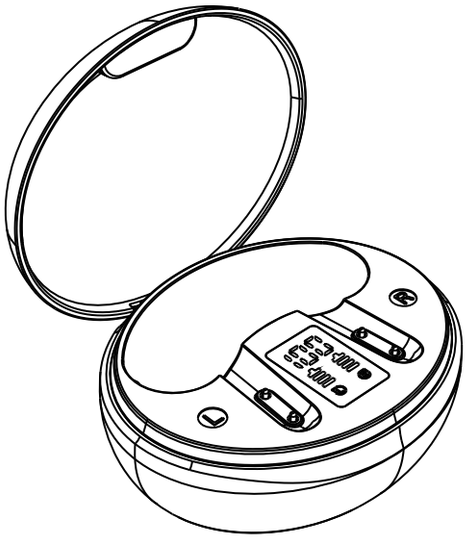

Charging case

3 Pairs of Eartips
(S / M / L)

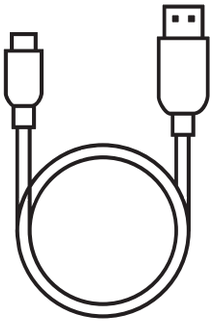

USB-A to C Cable

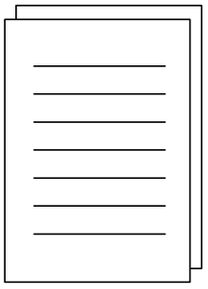

User Manual

Product Diagram

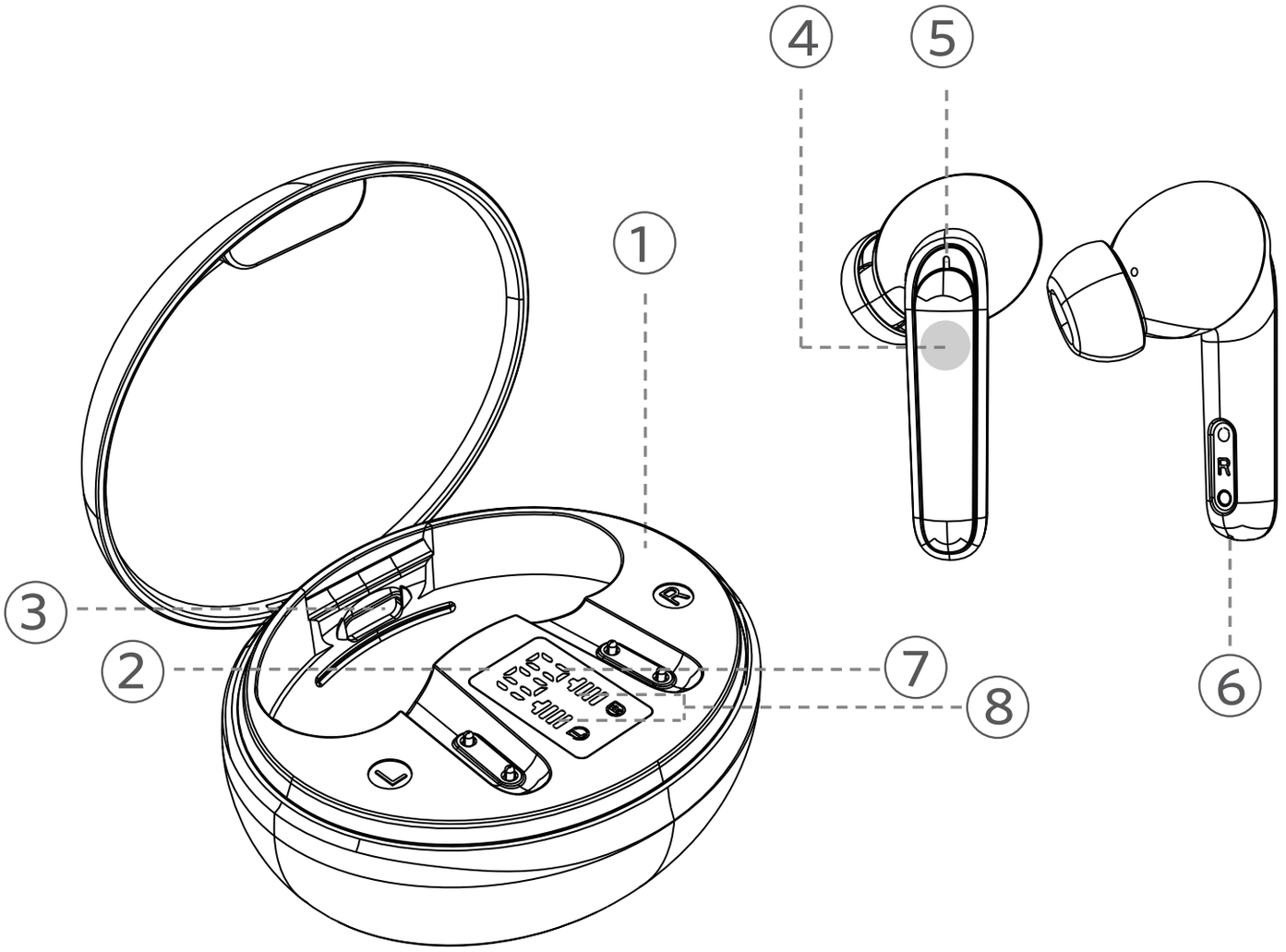

1. Charging case
2. LED Power Display
3. Charging port
4. Touch control
5. Earbud LED Indicator
6. Microphones
7. Charging Case Power
8. Earbuds Power

Charging

Charging the Case

Fully dry off the earbuds and the USB port before charging.
Use a certified USB-C charging cable and charger to prevent any damage.
Fully charge both the earbuds and the charging case before the first use.

Charging the Earbuds

1.Charging the earbuds: place the earbuds in the charging case and close it.
2.Charging the charging case: connect the charging case to the power supply by using a USB-C charging cable.

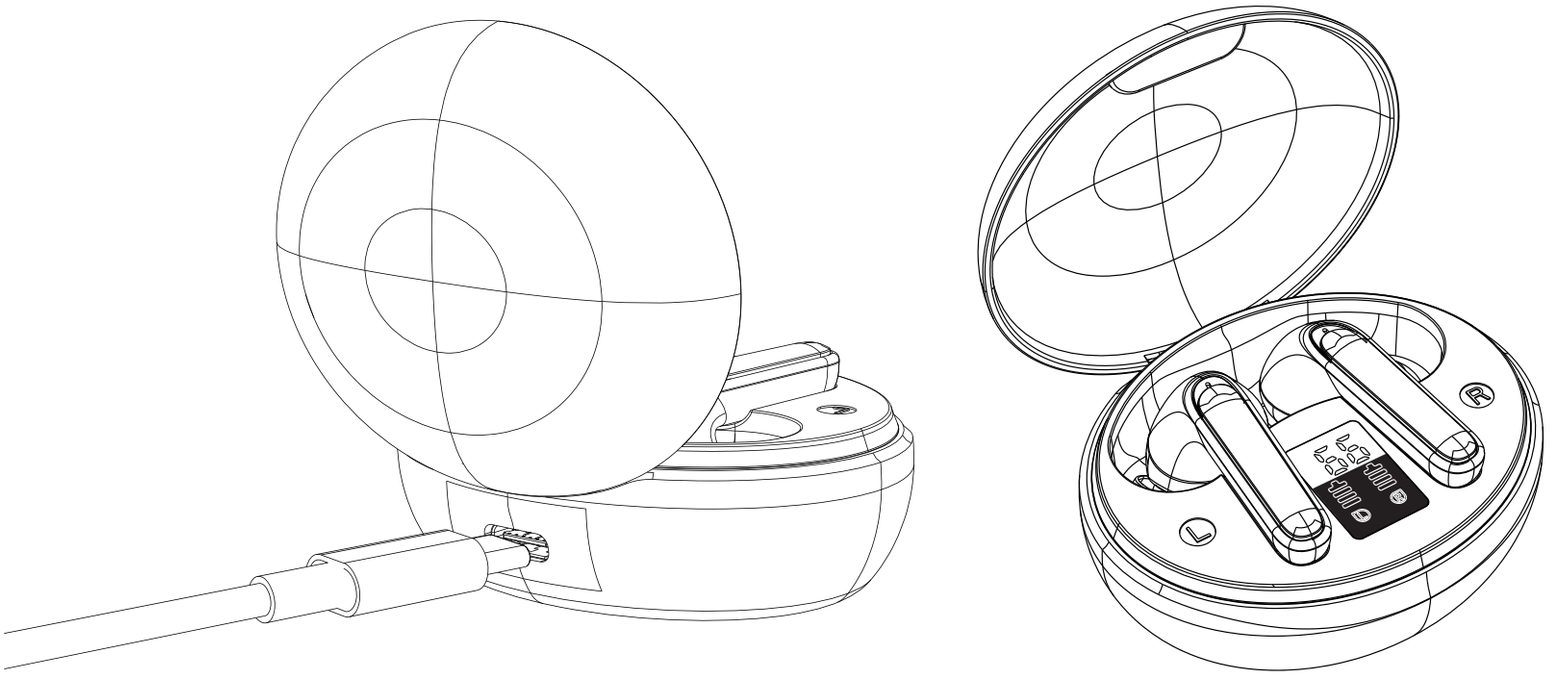

Power ON/OFF

Power On

Remove earbud from the charging case or press and hold on both panels for 5 seconds, the earbuds will power on.

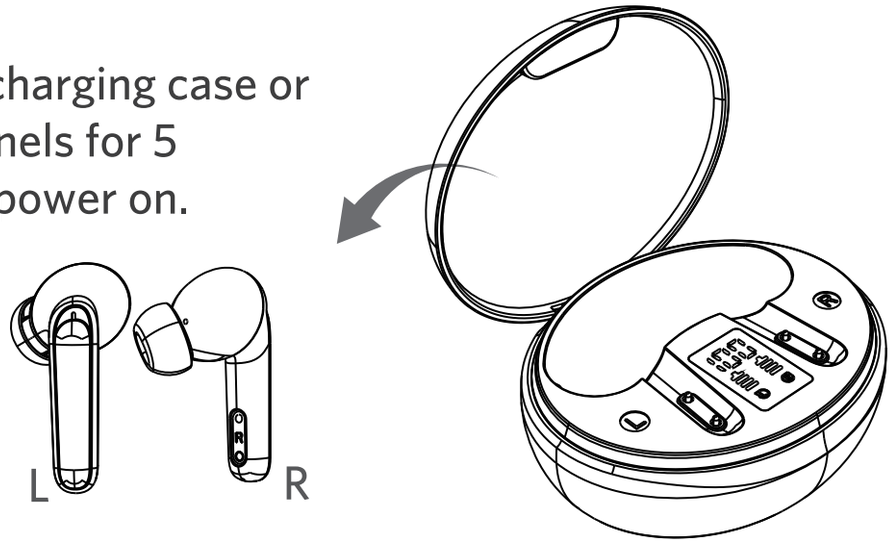

Power Off

place the earbuds in the charging case and close it.

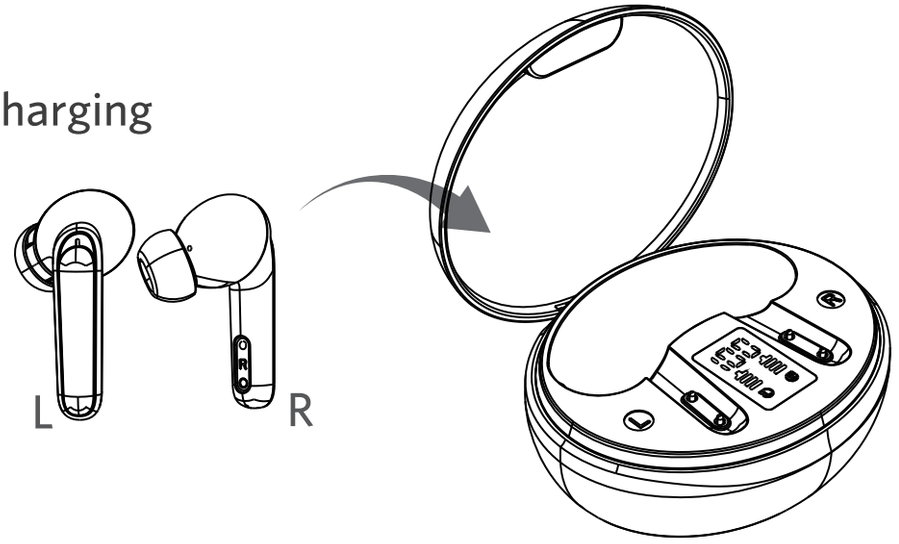

Notes:

- When you want to turn on the earbuds manually, touch L/R earbud for 5 seconds with a voice prompt "power on" .
- It will automaticlly turn off when you put its into the charge case.

Way to Pair

1. Take the left and right earbuds out of the case, the earbuds will automatically enter the Bluetooth pairing mode.
2. Select “FlyPods” on your device’s Bluetooth list to connect.

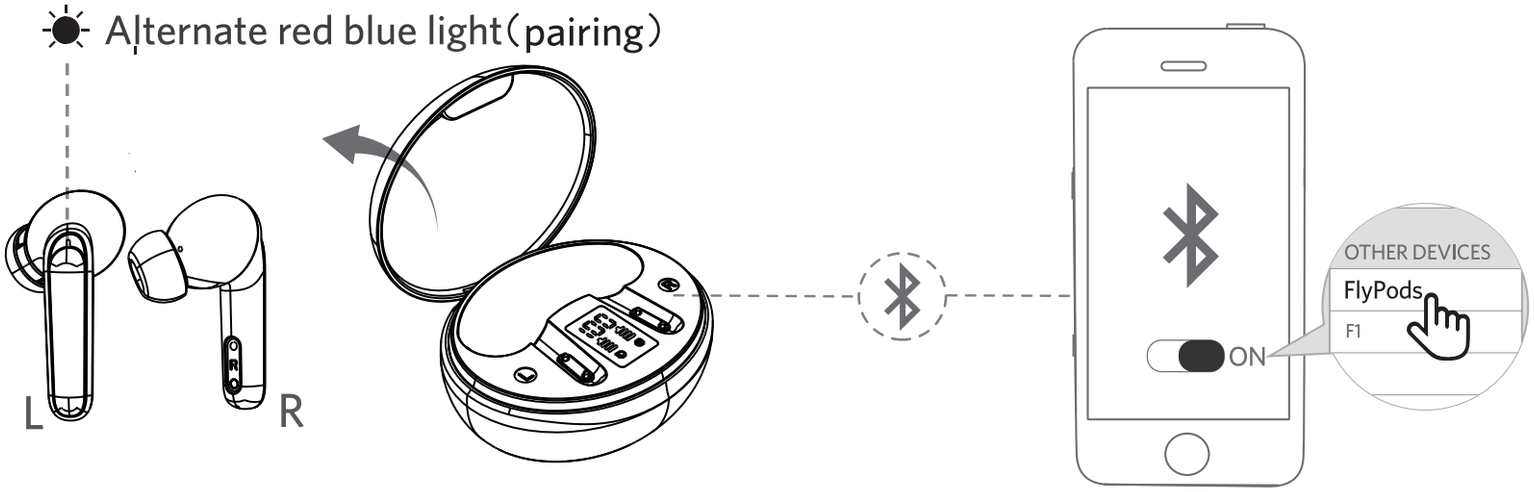

Notes:

- Each time you power on your Tensky FlyPods, they will automatically connect to your last successfully connected device if available within the Bluetooth range.
- Mono mode: When Bluetooth connected, you can use either one of the earbuds only by placing the other one into the charging case.
- When powered on and connected, if either one of the earbuds is out of battery and powered off, you can keep using the other one.
- If one of the earbuds has no sound output, place both earbuds back in the charging case. Make sure that both earbuds are charging, and take them out again.

Earbuds Led Indicator

Power on	Blue light on for 1 second
Power off	Red light on for 1 second
Pairing state	The main earbud flashes red and blue alternately
Pair succeed	The light off
Charging process	Red light on
Fully charged	Red light off

Wear Tips

1. Choose the EarTips that fit your ears best.
2. Insert the earbuds into the inner canal of your ears and turn gently until you find the most comfortable and secure position.

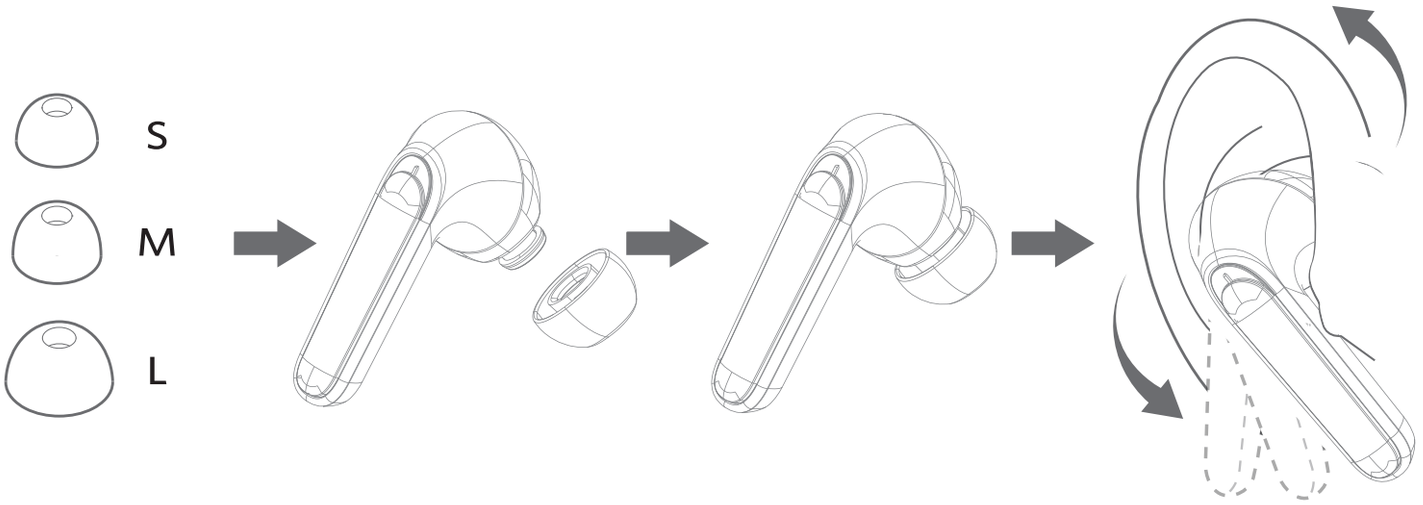

Operation & Response

Volume -		Press once (L)
Volume +		Press once (R)
Play/Pause		Press twice (L/R)
Previous track		Press 3 times (L)
Next track		Press 3 times (R)
Activate Siri		Press and hold for 2 seconds (L/R)
Answer/End a call		Press twice (L/R)
Reject calling		Press and hold for 2 seconds (L/R)
Factory reset		Touch L/R for 8seconds then press twice

Specifications

Bluetooth version	V5.1
Bluetooth Profile	HFP HSP A2DP AVRVP
Bluetooth Codec	AAC SBC
Bluetooth range	15 m / 49 ft
Horn	φ8.0*H4.8mm *2
Music playback time	7 hours (75% volume)
Earbuds battery	40mAh*2
Charging case battery	500mAh
Charging time	35mAh
Charging case battery	2 hours
Driver size	38.3*22.2*23.2mm *2
Weight	Earbuds 4.0g*2

Warning

1. Using earphone at high to moderate volumes for extended periods of time will result in permanent hearing damage. It is advised you keep volume levels moderate to low at times for your safety.
2.Do not use while driving a car, cycling, operating machinery, or performing other activities that require hearing surrounding sounds.
3. Do not use earphone in thunderstorm weather, the earphone may not work properly in the condition, and increase the risk of bring hit by lightning.
4. Earphone may not work properly under high temperature or high humidity conditions. Do not use any corrosive cleaner/oil to clean the earphone.
5. If the earphone comes in contact with liquids, quickly wipe away.
6.If submersed in water, do not turn the earphone on until completely dried.
7.Keep the earphone and packaging out of reach of children.
8. Please use the original charging cable provided by the earphone manufacturer for charging and choose the right adapter.

FAQ

1.The earbuds are on, but not connecting to my device

For the earbuds and your device to establish a connection, you need to put them both in pairing mode. Please follow the instructions in the Pairing section of this manual.

FAQ

2.I've connected the earbuds with my smartphone but can't hear any sound

Double-check the volume level on your smartphone and the earbuds. Some smartphones require you to set up the earbuds as an audio output device before the audio can be transmitted. If you're using a music player or other device, please make sure it supports the A2DP profile.

3.The sound isn't very clear or the caller can't hear my voice clearly

Adjust the volume on your smartphone and the earbuds. Try moving closer to your smartphone to rule out the possibility of interference or wireless range-related issues.

4.What's the wireless range of the earbuds?

The maximum range is 15m (49ft). However, the actual range depends on environmental factors. For optimal performance, keep your device connected within a range of roughly 6m to 12m and make sure that there are no major obstacles (like reinforced steel walls) between the earbuds and your device.

5.The earbuds won't turn on

Try charging the earbuds for a while. If the earbuds still won't power on, please contact our support team at the email address given in Warranty & Customer Support.

6.I put the earbuds back in the charging case, but the earbuds are still connected

The charging case is probably out of power. Try charging it.

Warranty & Customer Support

For questions, support, or warranty claims, contact us at the address below that corresponds with your region. Please include your Amazon order number and product model number.

Amazon US orders:	
Amazon EU orders:	
Amazon CA orders:	

*Please note, Tensky can only provide after-sales service for products purchased directly from Tensky. If you have purchased from a different seller, please contact them directly for service or warranty issues.

FCC Statement

This equipment has been tested and found to comply with the limits for a Class B digital device, pursuant to part 15 of the FCC Rules. These limits are designed to provide reasonable protection against harmful interference in a residential installation. This equipment generates, uses and can radiate radio frequency energy and, if not installed and used in accordance with the instructions, may cause harmful interference to radio communications. However, there is no guarantee that interference will not occur in a particular installation. If this equipment does cause harmful interference to radio or television reception, which can be determined by turning the equipment off and on, the user is encouraged to try to correct the interference by one or more of the following measures:

•Reorient or relocate the receiving antenna.
•Increase the separation between the equipment and receiver.
•Connect the equipment into an outlet on a circuit different from that to which the receiver is connected.
•Consult the dealer or an experienced radio/TV technician for help.

Caution: Any changes or modifications to this device not explicitly approved by manufacturer could void your authority to operate this equipment.

This device complies with part 15 of the FCC Rules. Operation is subject to the following two conditions: (1) This device may not cause harmful interference, and (2) this device must accept any interference received, including interference that may cause undesired operation.

RF Exposure Information

The device has been evaluated to meet general RF exposure requirement. The device can be used in portable exposure condition without restriction.

ISED Statement

English:This device contains licence-exempt transmitter(s)/receiver(s) that comply with Innovation, Science and Economic Development Canada’s licence-exempt RSS(s). Operation is subject to the following two conditions:

(1) This device may not cause interference.
(2) This device must accept any interference, including interference that may cause undesired operation of the device.

The digital apparatus complies with Canadian CAN ICES-3 (B)/NMB-3(B).

French: Cet appareil contient des émetteurs/récepteurs exempts de licence qui sont conformes aux RSS exemptés de licence d'Innovation, Sciences et Développement économique Canada.

L'exploitation est soumise aux deux conditions suivantes :

(1) Cet appareil ne doit pas provoquer d'interférences.
(2) Cet appareil doit accepter toute interférence, y compris les interférences susceptibles de provoquer un fonctionnement indésirable de l'appareil.

l'appareil numérique du ciem conforme canadien peut - 3 (b) / nmb - 3 (b).

This device meets the exemption from the routine evaluation limits in section 2.5 of RSS 102 and compliance with RSS 102 RF exposure, users can obtain Canadian information on RF exposure and compliance.

cet appareil est conforme à l'exemption des limites d'évaluation courante dans la section 2.5 du cnr - 102 et conformité avec rss 102 de l'exposition aux rf, les utilisateurs peuvent obtenir des données canadiennes sur l'exposition aux champs rf et la conformité.

This equipment complies with Canada radiation exposure limits set forth for an uncontrolled environment.

Cet équipement est conforme aux limites d'exposition aux rayonnements du Canada établies pour un environnement non contrôlé.

RF Exposure Statement

The device has been evaluated to meet general RF exposure requirement. This equipment should be installed and operated with minimum distance 0mm between the radiator & your body.

L'appareil a été évalué pour répondre aux exigences générales d'exposition aux RF. Cet équipement doit être installé et utilisé avec une distance minimale de 0 mm entre le radiateur et votre corps.