FLASH TECHNOLOGY

M660

USER MANUAL

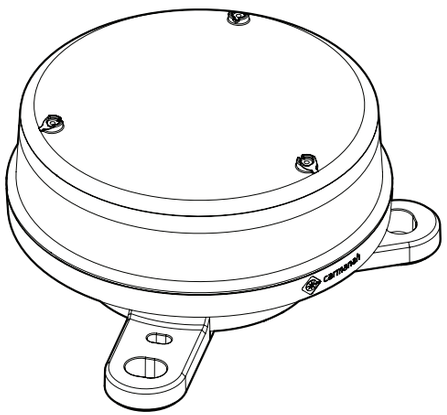

INTRODUCTION

The M660 Solar Marine Lantern is:

- Self-contained, high-performance and solar-powered
- Easy-to-install and low-maintenance with a long-life LED
- Available in red, green, white, yellow and blue
- Is suitable for a range of marking applications.

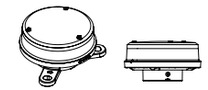

3-Hole Flange Mount *Pole Mount*

Nominal range of a lantern depends on its effective intensity and environmental conditions. For details on how to calculate range, visit www.marine.sabik.com.

APPLICATIONS

The M660 can be used for:

- Marking marine aids-to-navigation (ATON)
- Private aid-to-navigation (PATON)
- Dock & marina light
- General purpose marking light

INSTALLATION

Year-round, unrestricted solar exposure is critical to long-term performance. Shade dramatically reduces the ability of the light to charge its battery.

The M660 can be mounted to a flat surface or pole. Ensure the correct mounting method is selected before lantern installation.

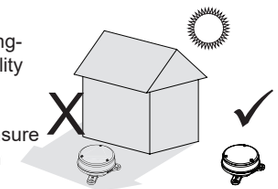

3-HOLE FLANGE MOUNT

To attach the 3-hole flange mount

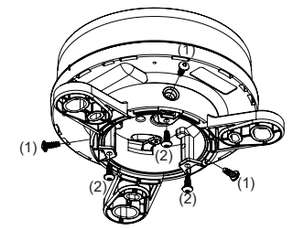

1. Ensure the flange mount is aligned correctly.
2. Attach the flange mount to the light unit using the provided 3 screws (1). Do not over tighten.
3. For extra security use 3 more screws to attach the flange mount to the light unit (2). Do not over tighten.

To install the lantern:
Fix in place with 3x bolts, studs & nuts, nails or screws. Recommended bolt size is 1/4-20 UNC or M6.

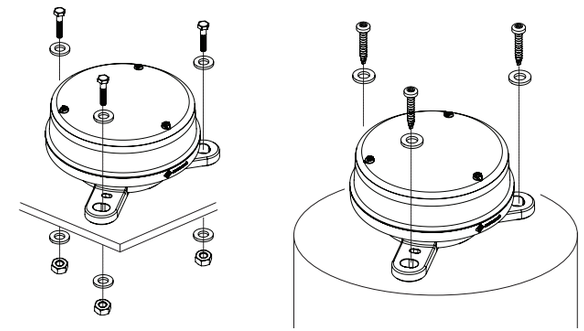

POLE MOUNT

1. Remove flange mount
2. Slide the lantern over the pole; press down to ensure lantern is well seated.
3. Secure with the provided 3 screws; if required, drill 1/8 - 9/64 in. [3.2 - 3.6 mm] pilot holes and then install the screws

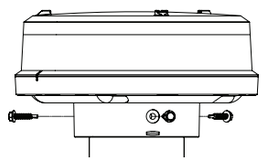

BIRD DETERRENTS

Up to 3 bird deterrents can be installed:

Use only the screws provided to prevent damage to the lantern.

1. Insert a mounting screw through the bird deterrent
2. Install the screw. Do not over tighten.
3. Bend bird deterrent as needed

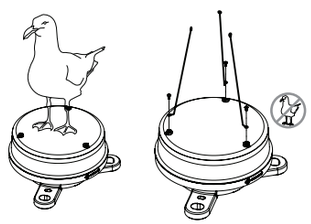

OPERATION

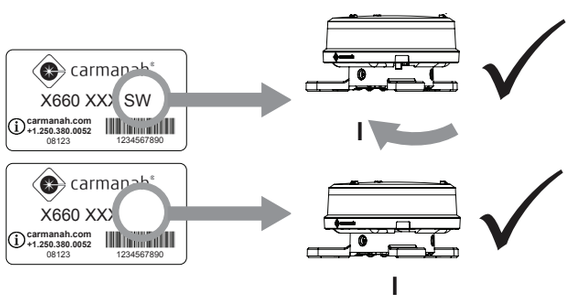

OPERATION

In daylight, the solar panel charges the battery using the Energy Management System (EMS). The capacity of the battery ensures that even with poor levels of sunlight over an extended period, the lantern has enough reserve power to continue to perform reliably. Stored battery energy then powers the LED during the night.

The change from night-to-day or day-to-night is called a transition. To avoid false transitions and ensure stable operation, the transition time is 30 seconds. For example, 30 seconds of dark is needed for the lantern to switch to night operation.

PROGRAMMING

The M660 is configured using the IR programmer or Bluetooth Control App. Contact your distributor for App access and registration details.

The lantern's mating IR receiver is on an energy-saving sleep cycle.

Press and hold ⏻ to awaken the IR receiver and begin communication with the lantern:

The lantern is now ready to accept programming. Note that the lantern will quickly flash after every key it receives. All programming codes follow the same sequence:

⏻ # # # ✓ ☆☆☆ 3 quick flashes Command accepted ☆☆ 2 slow flashes Command rejected

The number symbol # represents 0 - 9. Commands can be rejected if they are unsupported, contain an incorrect key sequence, or have an effective intensity too high for the programmed flash code.

SETTING THE FLASH

To set the flash pattern, enter its flash code using the IR programmer or Bluetooth control. Flash codes are listed in a table at the end of this document.

Example: Enter ⏻ 1 2 9 ✓ for quick flash Q 1s 0.3, (flash code 129)

SETTING THE INTENSITY

The M660 is programmed using Effective Intensity. Effective Intensity is the brightness of a flashing light as perceived by the human eye (as opposed to Peak Intensity which is the actual intensity of a light during a flash). Effective Intensity is calculated using the following equation:

$$\text{Effective Intensity (cd)} = \frac{\text{Peak Intensity (cd)} \times \text{Flash Duration (sec)}}{0.2\ \text{(sec)} + \text{Flash Duration (sec)}}$$

The M660 makes this calculation automatically based on your programmed flash code and Effective Intensity selected. Note that for a fixed/steady-burning light (code 001), effective intensity equals peak intensity. The range of intensity codes are:

602	2 effective cd (minimum value)
603	3 effective cd
...	
6##	Maximum values vary by flash code and LED colour

Example: Enter ⏻ 6 0 5 ✓ for intensity of 5 effective cd

Product performance varies by installation location. Only use verified sustainable settings. Visit www.marine.sabik.com for details.

TURNING ON/OFF

In “on” mode, the M660 LED turns on at night and off during the day. In “off” mode, the lantern charges in sunlight, but the LED remains off. When turned on again, the lantern activates at its last programmed settings.

Option 1: Switched Models
Set the switch to on or off position

Option 2 : IR Programmer
Establish an IR connection with the lantern then press and hold ⏻ The lantern LED will flash 3 times to confirm the setting change.

CHECKING BATTERY STATE OF CHARGE (SOC)

Using the IR programmer, enter: ⓘ

☆☆☆ Good battery ☆☆ Charge battery ☆ Low battery

AUTOMATIC LIGHT CONTROL

During longer periods of poor solar charging, Automatic Light Control (ALC) may decrease LED intensity based on battery SOC and recent charging trends. When solar charging improves, ALC increases intensity back to the user setting. ALC may be disabled to keep the lantern at a constant intensity.

Enable ALC: ⏻ 8 0 1 ✓ Disable ALC: ⏻ 8 0 0 ✓

SPECIFICATIONS

Visit www.marine.sabik.com for complete specifications

Operating Temperature	-40° to 122 °F (-40° to 50°C) Batteries charge when internal product temperature is -22° to 158 °F (-30° to 70°C)	Light Source	High-power LED
Divergence	>8 ° FWHM Vertical Divergence	Chromaticity	Blue, red, white, yellow, and green
Battery	Lithium Ion (LiOn), 3.7 V Nominal Certified to UN 38.3 IEC 62133: 2012 (Second Edition)	Immersion	IP68, 3 ft. (1m) for 72 hrs.; EN 60529 MIL-STD-202G immersion & damp heat cycling, MIL-STD-810G rain & salt fog
Regulatory	RoHS Restriction of Hazardous Substances Directive 2011/65/EU CE This device complies with Part 15 of the FCC Rules & Industry Canada license-exempt RSS standard(s). Operation is subject to the following two conditions: (1) this device may not cause harmful interference, and (2) this device must accept any interference received, including interference that may cause undesired operation. Le présent appareil est conforme aux CNR d’Industrie Canada applicables aux appareils radio exempts de licence. L’exploitation est autorisée aux deux conditions suivantes : (1) l’appareil ne doit pas produire de brouillage, et (2) l’utilisateur de l’appareil doit accepter tout brouillage radioélectrique subi, même si le brouillage est susceptible d’en compromettre le fonctionnement. CAN ICES-3 (B)/NMB-3(B) – This Class B Digital Apparatus Complies with Canadian ICES-003. Cet Appareil numerique de la classe (B) est conforme a la norme NMB-003 du Canada. NOTE: This equipment has been tested and found to comply with the limits for a Class B digital device, pursuant to part 15 of the FCC Rules. These limits are designed to provide reasonable protection against harmful interference in a residential installation. This equipment generates, uses and can radiate radio frequency energy and, if not installed and used in accordance with the instructions, may cause harmful interference to radio communications. However, there is no guarantee that interference will not occur in a particular installation. If this equipment does cause harmful interference to radio or television reception, which can be determined by turning the equipment off and on, the user is encouraged to try to correct the interference by one or more of the following measures: Reorient or relocate the receiving antenna. Increase the separation between the equipment and receiver. Connect the equipment into an outlet on a circuit different from that to which the receiver is connected. Consult the dealer or an experienced radio/TV technician for help. Changes or modifications not expressly approved by the party responsible for compliance could void the user’s authority to operate the equipment. N’approuve aucune modification apportée à l’appareil par l’utilisateur, quelle qu’en soit la nature. Tout changement ou modification peuvent annuler le droit d’utilisation de l’appareil par l’utilisateur.		

BATTERY CHARGING

The M660 can recharge low batteries back to full charge (4.1V).
Approximate charging times:

Summer sunlight	8-12 hours (single)	16 -24 hours (dual)
Winter sunlight or lamp	20-40 hours (single)	40-80 hours (dual)

⚠ Take care when charging using a lamp. Provide air circulation or a fan so that lantern and batteries do not exceed maximum temperature

The optional indoor use plug-in charger allows you to quickly charge M660s that are equipped with charge ports. Visit www.marine.sabik.com for details.

DIMENSIONS

3-Hole Flange Mount
1.8 lb (0.8 kg)

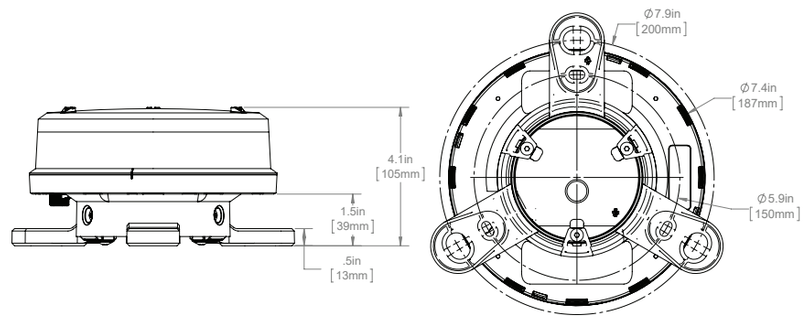

FLASH CODES

The M660 supports more than 270 flash codes. A partial list is shown below. For a complete list see the Marine Selector Tool or Sabik Bluetooth Control app. Maximum effective intensity varies by flash code and color.
Use the Marine Selector Tool at www.marine.sabik.com to determine if a desired flash code is sustainable in your location.

Flash Code	Flash Character	FL1	EC1	FL2	EC2	FL3	EC3	FL4	EC4	FL5	EC5	Duty Cycle	Maximum Effective Intensity (cd)				
													White	Yellow	Green	Red	Blue
000	off	0	0									0%	0	0	0	0	0
001	F	60	0									100%	29	25	23	18	8
012	Fl (2) 6s 0.5	0.5	1	0.5	4							16.7%	20	17	17	12	6
016	Fl (2) 8s 0.5	0.5	1	0.5	6							12.5%	20	17	17	12	6
043	Fl 1.5s 0.5	0.5	1									33.3%	20	17	17	12	6
044	Fl 10s 0.5	0.5	9.5									5%	20	17	17	12	6
049	Fl 2.5s 0.3	0.3	2.2									12%	17	15	14	10	5
050	Fl 2.5s 0.5	0.5	2									20%	20	17	17	12	6
051	Fl 2.8s 0.3	0.3	2.5									10.7%	17	15	14	10	5
052	Fl 2s 0.2	0.2	1.8									10%	14	12	11	9	4
055	Fl 2s 0.5	0.5	1.5									25%	20	17	17	12	6
058	Fl 3s 0.3	0.3	2.7									10%	17	15	14	10	5
059	Fl 3s 0.5	0.5	2.5									16.7%	20	17	17	12	6
060	Fl 3s 0.7	0.7	2.3									23.3%	22	19	18	14	6
061	Fl 3s 1.0	1	2									33.3%	24	20	19	15	7
063	Fl 4.4s 0.4	0.4	4									9.1%	19	16	15	12	5
064	Fl 4s 0.5	0.5	3.5									12.5%	20	17	17	12	6
066	Fl 4s 1.0	1	3									25%	24	20	19	15	7
068	Fl 5s 0.3	0.3	4.7									6%	17	15	14	10	5
069	Fl 5s 0.5	0.5	4.5									10%	20	17	17	12	6
070	Fl 5s 1.0	1	4									20%	24	20	19	15	7
072	Fl 6s 0.5	0.5	5.5									8.3%	20	17	17	12	6
078	Iso 2s	1	1									50%	24	20	19	15	7
079	Iso 4s	2	2									50%	26	22	21	16	7
098	Mo(U) 10s 0.3	0.3	0.7	0.3	0.7	0.9	7.1					15%	17	15	14	10	5
099	Mo(U) 10s 0.4	0.4	0.6	0.4	0.6	1.2	6.8					20%	19	16	15	12	5
103	Mo(U) 15s 0.7 0.5	0.7	0.5	0.7	0.5	1.9	10.7					22%	22	19	18	14	6
104	Mo(U) 15s 0.7 0.7	0.7	0.7	0.7	0.7	2.1	10.1					23.3%	22	19	18	14	6
125	Q 1.2s 0.3	0.3	0.9									25%	17	15	14	10	5
126	Q 1.2s 0.5	0.5	0.7									41.7%	20	17	17	12	6
129	Q 1s 0.3	0.3	0.7									30%	17	15	14	10	5
131	Q 1s 0.5	0.5	0.5									50%	20	17	17	12	6
144	Q(4) 20s 0.5	0.5	0.5	0.5	0.5	0.5	0.5	0.5	16.5			10%	20	17	17	12	6
147	Q(5) 20s 0.3	0.3	0.7	0.3	0.7	0.3	0.7	0.3	0.7	0.3	15.7	7.5%	17	15	14	10	5
160	VQ 0.6s 0.3	0.3	0.3									50%	17	15	14	10	5
174	Fl 4s 0.4	0.4	3.6									10%	19	16	15	12	5
178	Fl (3+1) 20s 0.5	0.5	1.5	0.5	1.5	0.5	4.5	0.5	10.5			10%	20	17	17	12	6
179	Fl (3+1) 20s 0.6	0.6	1.4	0.6	1.4	0.6	4.4	0.6	10.4			12%	21	18	17	13	6
209	Q 1s 0.15	0.15	0.85									15%	12	10	10	7	3
238	CST9	0.6	0.3	0.6	0.3	1.5	56.7					4.5%	21	18	17	13	6
241	Fl 3.5s 0.7	0.7	2.8									20%	22	19	18	14	6

STORAGE

Turn the lantern off to store. In switched models, set the switch to the “off” position. To turn off using the IR programmer, press and hold ⏻

- If a lantern detects continuous dark for 24 hrs, it will disable the LED. Upon sensing light, it will enable the LED and continue normal operation
- Check the battery state of charge every 1 - 2 months and charge if required

TROUBLESHOOTING

LED is off during the night	Batteries are very low and lantern cannot turn on	Charge the lantern
	Batteries are low and LVD is active	Confirm with code 810 using IR programmer. Charge lantern. Decrease effective intensity to a sustainable level
	Switch is off	Switch to on
	Night not yet detected	Wait for the lantern to detect 2 min. of consistent “dark”
	Nearby light source is illuminating the lantern	Move away from light source, turn off unneeded light, or shield lanterns
No response to IR programmer	Batteries are very low and lantern cannot turn on	Charge the lantern
	Sunlight is obscuring IR signal	Move the IR programmer closer to the lantern
Moisture inside	Condensation	Ensure the vent on the bottom cover is not dirty or obstructed

⚠ Possibly hazardous optical radiation emitted from this product. Do not stare at operating light. May be harmful to the eye.

MAINTENANCE

Although the M660 is maintenance-free, performance gains can be made. Clean with water and a soft sponge or cloth. A mild non-abrasive cleanser can be used for more stubborn residue. Clean more frequently during drier months as dust accumulates more quickly. Check for any damaged, missing or broken hardware.

RECYCLING

This product may contain substances that could be harmful to the environment or human health if improperly handled at the product’s end of life. Check your local municipality for electronics recyclers.

♻ The batteries are rechargeable Lithium Ion (LiOn). Consult your local laws for information on recycling.

WARRANTY

This product is covered by the Flash Technology warranty. Failure to comply with the use, storage, maintenance or installation instructions detailed in this document could void the warranty. Changes or modifications not expressly approved by the party responsible for compliance could void the user’s authority to operate the equipment.

Email: customerservice@flashtechnology.com
Toll Free: 1.800.821.5825
Worldwide: 1.615.503.2000
Fax: 1.615.261.2600
Web: flashtechnology.com