THANK YOU FOR CHOOSING THOR KITCHEN FOR YOUR HOME

We take pride in the craftsmanship, innovation and design that goes into every Thor product, and we think you will too. Besides, registration of your appliance ensures that we can deliver important product information and warranty details when you need them.

Register your Thor appliance now online. Helpful websites are available in the Consumer Support section of this Owner's Manual.

Statement

This device complies with part 18 of the FCC Rules.

This equipment generates and uses ISM frequency energy and if not installed and used properly, that is in strict accordance with the manufacturer's instructions, may cause interference to radio and television reception. It has been type tested and found to comply with limits for ISM Equipment pursuant to part 18 of FCC Rules, which are designed to part 18 of FCC Rules, which are designed to provide residential installation.

The manufacturer is not responsible for any radio of TV interference caused by unauthorized modification to this microwave oven. It is the responsibility of the user to correct such interference.

This device complies with part 15 of the FCC Rules. Operation is subject to the following two conditions: (1) This device may not cause harmful interference, and (2) this device must accept any interference received, including interference that may cause undesired operation.

However,there is no guarantee that interference will not occur in a particular installation.If this equipment does cause interference to radio or television reception, which can be determined by turning the equipment off and on,the user is encouraged to try to correct the interference by one or more of the following:

- Reorient the receiving antenna of the radio or television.
- Relocate the Microwave Oven with respect to the receiver.
- Move the microwave oven away from the receiver.
- Plug the microwave oven into a different outlet so that the microwave oven and the receiver are on different branch codes.

THOR KITCHEN®

Owner's Manual

Induction Slide-In Ranges

Contents

Safety Information 3

Using the Range

Surface Units 6

Cookware for Induction Cooktop 7

Oven Control 9

Oven Racks 10

Aluminum Foil and Oven Liners 11

Cooking Guide 12

Care And Cleaning

Range – Exterior 13

Range – Interior 14

Glass Cooktop 15

Drawer 17

Oven Light 18

Oven Door 18

Troubleshooting Tips 20

Power Control 22

Indication Sound 22

Warranty 23

Consumer Support 25

Write the model and serial numbers here:

Model # HB3001U

Serial # HB3002U

FCC ID # 2ATJNHIR3004-1

You can find the rating label on the front behind the range drawer.

What's in the Box?

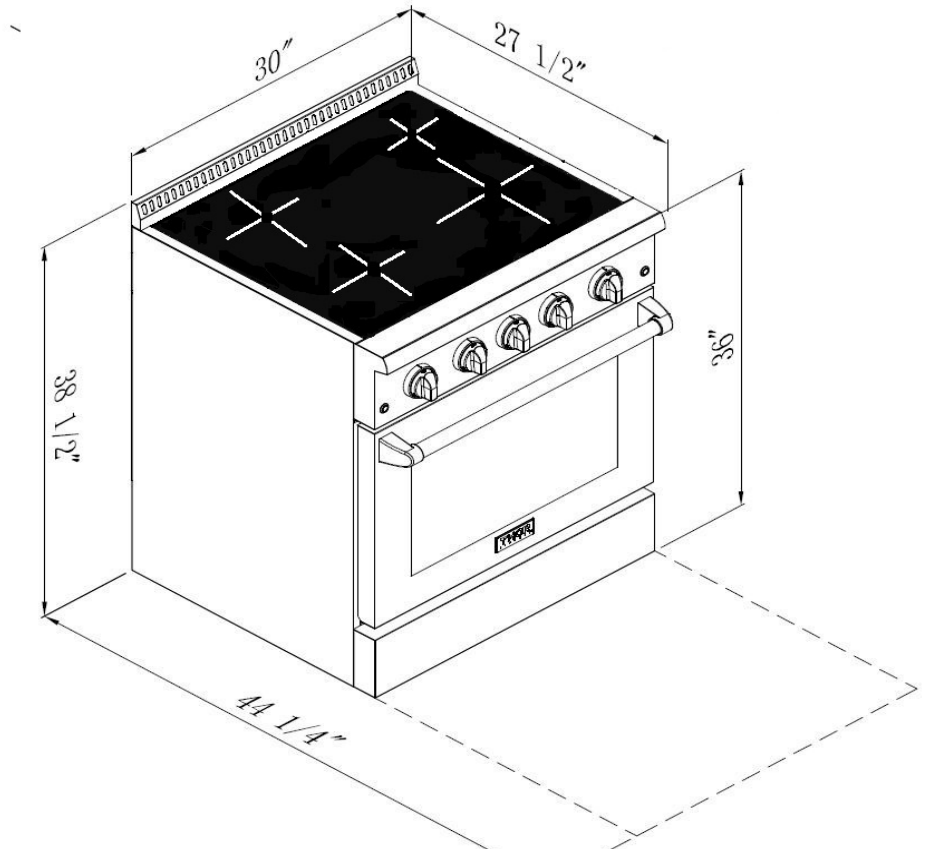

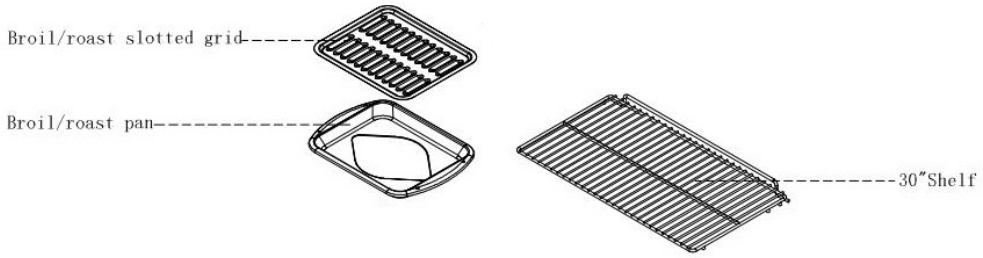

IMPORTANT SAFETY INFORMATION
READ ALL INSTRUCTIONS BEFORE USING THE APPLIANCE

⚠WARNING Read all safety instructions before using the product. Failure to follow these instructions may result in fire, electrical shock, serious injury or death.

ANTI-TIP DEVICE

⚠WARNING

Tip-Over Hazard

- **A child or adult can tip the range and be killed.**
- **Install the anti-tip bracket to the wall or floor.**
- **Engage the range to the anti-tip bracket by sliding the range back such that the foot is engaged.**
- **Re-engage the anti-tip bracket if the range is moved.**
- **Failure to do so can result in death or serious burns to children or adults.**

To reduce the risk of tipping the range, the range must be secured by a properly installed anti-tip bracket. See installation instructions in the instruction sheet.

For Free-Standing and Slide-In Ranges

To check if the bracket is installed and engaged properly, look underneath the range to see that the rear leveling leg is engaged in the bracket. On some models, the storage drawer or kick panel can be removed for easy inspection. If visual inspection is not possible, slide the range forward, confirm the anti-tip bracket is securely attached to the floor or wall, and slide the range back so the rear leveling leg is under the anti-tip bracket.

If the range is pulled from the wall for any reason, always repeat this procedure to verify the range is properly secured by the anti-tip bracket.

Never completely remove the leveling legs or the range will not be secured to the anti-tip device properly. Even after the safety device is installed, do not step, lean or sit on the oven door or place any heavy objects on it. Doing so may result in personal injury.

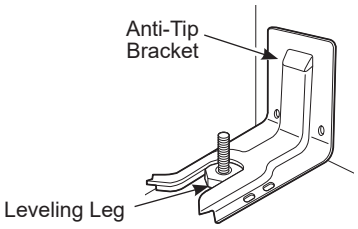

Free-Standing and Slide-In Ranges

⚠WARNING GENERAL SAFETY INSTRUCTIONS

- Before performing any service, unplug the range or disconnect the power supply at the household distribution panel by removing the fuse or switching off the circuit breaker.
- Do not leave children alone—children should not be left alone or unattended in an area where an appliance is in use. They should never be allowed to climb, sit or stand on any part of the appliance.
- **⚠CAUTION** Do not store items of interest to children above a range or on the backguard of a range—children climbing on the range to reach items could be seriously injured.
- Use only dry pot holders—moist or damp pot holders on hot surfaces may result in burns from steam. Do not let pot holders touch hot surface units or heating elements. Do not use a towel or other bulky cloth in place of pot holders.
- Never use your appliance for warming or heating the room.
- Do not touch the surface units, the heating elements or the interior surface of the oven. These surfaces may be hot enough to burn even though they are dark in color. During and after use, do not touch, or let clothing or other flammable materials contact the surface units, areas nearby the surface units or any interior area of the oven; allow sufficient time for cooling first. Other surfaces of the appliance may become hot enough to cause burns. Potentially hot surfaces include the cooktop, areas facing the cooktop, oven vent opening, surfaces near the opening and crevices around the oven door.
- Do not heat unopened food containers. Pressure could build up and the container could burst, causing an injury.
- Do not use any type of foil or liner to cover the oven bottom or anywhere in the oven, except as described in this manual. Oven liners can trap heat or melt, resulting in damage to the product and risk of shock, smoke or fire.
- Avoid scratching or impacting glass doors, cook tops or control panels. Doing so may lead to glass breakage. Do not cook on a product with broken glass. Shock, fire or cuts may occur.
- Cook meat and poultry thoroughly—meat to at least an internal temperature of 160°F and poultry to at least an internal temperature of 180°F. Cooking to these temperatures usually protects against foodborne illness.

READ AND SAVE THESE INSTRUCTIONS

IMPORTANT SAFETY INFORMATION
READ ALL INSTRUCTIONS BEFORE USING THE APPLIANCE

⚠WARNING **KEEP FLAMMABLE MATERIALS AWAY FROM THE RANGE**
Failure to do so may result in fire or personal injury.

- Do not store or use flammable materials in an oven or near the cooktop, including paper, plastic, pot holders, linens, wall coverings, curtains, drapes and gasoline or other flammable vapors and liquids.
- Never wear loose-fitting or hanging garments while using the appliance. These garments may ignite if they contact hot surfaces causing severe burns.
- Do not let cooking grease or other flammable materials accumulate in or near the range. Grease in the oven or on the cooktop may ignite.
- Clean ventilating hoods frequently. Grease should not be allowed to accumulate on the hood or filter.

⚠WARNING **IN THE EVENT OF A FIRE, TAKE THE FOLLOWING STEPS TO PREVENT INJURY AND FIRE SPREADING**

- Do not use water on grease fires. Never pick up a flaming pan. Turn the controls off. Smother a flaming pan on a surface unit by covering the pan completely with a well-fitting lid, cookie sheet or flat tray. Use a multi-purpose dry chemical or foam-type fire extinguisher.
- If there is a fire in the oven during baking, smother the fire by closing the oven door and turning the oven off or by using a multi-purpose dry chemical or foam-type fire extinguisher.
- If there is a fire in the oven during self-clean, turn the oven off and wait for the fire to go out. Do not force the door open. Introduction of fresh air at self-clean temperatures may lead to a burst of flame from the oven. Failure to follow this instruction may result in severe burns.

⚠WARNING **COOKTOP SAFETY INSTRUCTIONS**

- Never leave the surface units unattended at medium or high heat settings. Boilovers cause smoking and greasy spillovers that may catch on fire.
- Never leave oil unattended while frying. If allowed to heat beyond its smoking point, oil may ignite resulting in fire that may spread to surrounding cabinets. Use a deep fat thermometer whenever possible to monitor oil temperature.
- To avoid oil spillover and fire, use a minimum amount of oil when shallow pan-frying and avoid cooking frozen foods with excessive amounts of ice.
- Only certain types of glass, glass/ceramic, earthenware or other glazed containers are suitable for cooktop service; others may break because of the sudden change in temperature.
- To minimize the possibility of burns, ignition of flammable materials and spillage, the handle of a container should be turned toward the center of the range without extending over nearby surface units.
- When preparing flaming foods under a hood, turn the fan on.

READ AND SAVE THESE INSTRUCTIONS

IMPORTANT SAFETY INFORMATION
READ ALL INSTRUCTIONS BEFORE USING THE APPLIANCE

⚠WARNING GLASS COOKTOP SAFETY INSTRUCTIONS

- Use care when touching the cooktop. The glass surface of the cooktop will retain heat after the controls have been turned off.
- Do not cook on a broken cooktop. If glass cooktop should break, cleaning solutions and spillovers may penetrate the broken cooktop and create a risk of electric shock. Contact a qualified technician immediately.
- Avoid scratching the glass cooktop. The cooktop can be scratched with items such as knives, sharp instruments, rings or other jewelry, and rivets on clothing.
- Use ceramic Cooktop Cleaner and Cleaning Pad to clean the cooktop. Wait until the cooktop cools and the indicator light goes out before cleaning. A wet sponge or cloth on a hot surface can cause steam burns. Some cleaners can produce noxious fumes if applied to a hot surface. **NOTE:** Sugar spills are an exception. They should be scraped off while still hot using an oven mitt and a scraper. See the Cleaning the glass cooktop section for detailed instructions.
- Read and follow all instructions and warnings on the cleaning cream label.
- Do not place or store items that can melt or catch fire on the glass cooktop, even when it is not being used. If the cooktop is inadvertently turned on, they may ignite. Heat from the cooktop or oven vent after it is turned off may cause them to ignite also.
- Do not place metallic objects such as knives, forks, spoons and lids on the cooktop surface since they can get hot.

⚠WARNING OVEN SAFETY INSTRUCTIONS

- Stand away from the range when opening the oven door. Hot air or steam which escapes can cause burns to hands, face and/or eyes.
- Do not use the oven if a heating element develops a glowing spot during use or shows other signs of damage. A glowing spot indicates the heating element may fail and present a potential burn, fire, or shock hazard. Turn the oven off immediately and have the heating element replaced by a qualified service technician.
- Keep the oven vent unobstructed.
- Keep the oven free from grease buildup. Grease in the oven may ignite.
- Place oven racks in desired location while oven is cool. If rack must be moved while oven is hot, do not let pot holder contact hot heating element in oven.
- When using cooking or roasting bags in the oven, follow the manufacturer's directions.
- Pull the oven rack to the stop-lock position when loading and unloading food from the oven. This helps prevent burns from touching hot surfaces of the door and oven walls.
- Do not leave items such as paper, cooking utensils or food in the oven when not in use. Items stored in an oven can ignite.
- Never place cooking utensils, pizza or baking stones, or any type of foil or liner on the oven floor. These items can trap heat or melt, resulting in damage to the product and risk of shock, smoke or fire.

READ AND SAVE THESE INSTRUCTIONS

Surface Units

How Induction Surface Cooking Works

The elements beneath the cooking surface produce a magnetic field that generates heat in ferrous metal pans that are in close proximity.

The cooking surface itself does not heat. Heat is produced in the cooking pan, and cannot be generated until a pan is placed on the cooking surface.

When the element is activated, the pan begins to heat immediately and in turn heats the contents of the pan.

Magnetic induction cooking requires the use of cookware made of ferrous metals—metals to which magnets will stick, such as iron or steel.

Use pans that fit the element size. The pan must be large enough for the element to detect the pan and be able to deliver full power.

The cooktop will not operate if a very small steel or iron utensil, such as a steel spatula, cooking spoon, knife or other small utensil, is placed on the cooking surface when the unit is turned on.

⚠CAUTION

- The induction cooking elements may appear to be cool while turned ON and after they have been turned OFF. The glass surface may be HOT from residual heat transferred from the cookware and burns may occur.
- DO NOT TOUCH HOT COOKWARE or PANS directly with hands. Always use mitts or pot holders to protect hands from burns.
- DO NOT SLIDE cookware across the cooktop surface. Doing so may permanently damage the appearance of the ceramic cooktop.

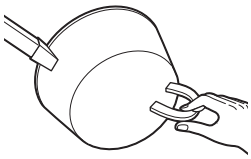

The pan material is correct if a magnet sticks to the bottom.

Operating the Cooktop Elements

⚠WARNING FIRE HAZARD: Never leave the range unattended with the cooktop on medium or high settings. Keep flammable items away from the cooktop. Turn off all controls when done cooking. Failure to follow these instructions can result in fire, serious injury or death.

Before using the cooktop for the first time, clean it with Ceramic Cooktop Cleaner. This helps protect the top and makes cleanup easier.

Throughout this manual, features and appearance may vary from your model.

Place your Induction designed cookware on the cooking surface. Push the knob in and turn in either direction to the setting you want.

A knob indicator light will glow when any surface unit is on.

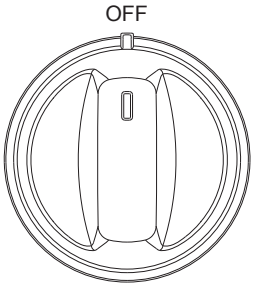

At both **OFF** and **HI** the control clicks into position. You may hear slight clicking sounds during cooking, indicating the control is maintaining your desired setting.

Be sure you turn the control knob to **OFF** when you finish cooking.

Cookware for Induction Cooktop

Using the correct size cookware

Pans that are not ferrous or are too small will not allow the induction elements to turn on, and the ON indicator for that element location will flash for 25 seconds and then turn off. If a pan is removed from or not centered on the induction coil for more than 30 seconds, the power for that element will be shut off.

Cookware larger than the element ring may be used; however, heat will only occur above the element.

For best results, the cookware must make FULL contact with the glass surface.

Do not allow the bottom of the pan or cookware to touch the surrounding metal cooktop trim.

For best performance, match the pan size to the element size. Using a smaller pot on a larger burner will generate less power at any given setting.

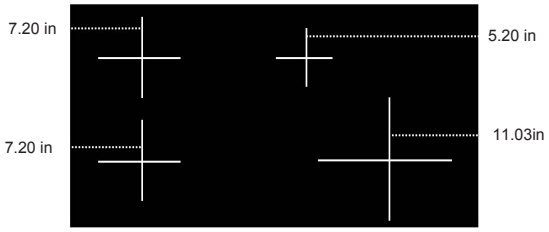

Use the minimum size pan shown for each cooking element.

Suitable Cookware

Use quality cookware with heavier bottoms for better heat distribution and even cooking results. Choose cookware made of magnetic stainless steel, enamel coated cast iron, enameled steel or combinations of these materials.

Some cookware is specifically identified by the manufacturer for use with induction cooktops. Use a magnet to test if the cookware will work.

Flat-bottomed pans give best results. Pans with rims or slight ridges can be used.

Round pans give best results. Pans with warped or curved bottoms will not heat evenly.

For wok cooking, use a flat-bottomed wok. Do not use a wok with a support ring.

NOTE: The warming zone is NOT an induction element and will work with flat bottomed cookware that is NOT ferrous.

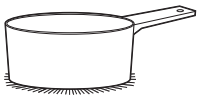

Use flat-bottomed pans.

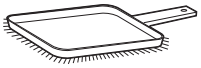

Use a griddle.

Use a flat-bottomed wok.

Cookware “Noise”

Slight sounds may be produced by different types of cookware. Heavier pans such as enameled cast iron produce less noise than a lighter weight multi-ply stainless steel pan. The size of the pan, and the amount of contents, can also contribute to the sound level.

When using adjacent elements that are set at certain power level settings, magnetic fields may interact and produce a low whistle or intermittent “hum”. These noises can be reduced or eliminated by lowering or raising the power level settings of one or both of the elements. Pans that completely cover the element ring will produce less noise.

A low “humming” noise is normal particularly on high settings.

Sounds you may here: You may hear a slight “Buzz” when cooking with Hi mode. This is normal. The sound depends on the type of pot being used. Some pots will “Buzz” louder depending on the material. A “Buzz” sound may be heard if the pan contents are cold. As the pan heats, the sound will decrease. If the power level is reduced, the sound level will go down.

Cookware for Induction Cooktop (Cont.)

Cookware recommendations

Cookware must fully contact the surface of the cooking element.

Use flat-bottomed pans sized to fit the cooking element and also to the amount of food being prepared.

Induction interface disks are NOT recommended.

INCORRECT	CORRECT
Cookware not centered on cooking element surface.	Cookware centered correctly on cooking element surface.
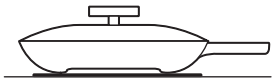 Curved or warped pan bottoms or sides.	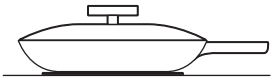 Flat pan bottom.
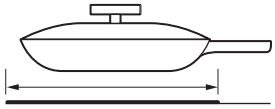 Pan does not meet the minimum size required for the cooking element used.	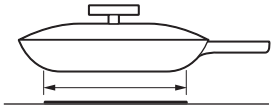 Pan size meets or exceeds the recommended minimum size for the cooking element used.
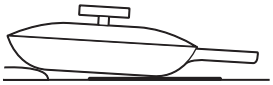 Pan bottom rests on cooktop trim or does not rest completely on the cooktop surface.	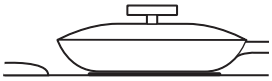 Pan bottom rests completely on the cooktop surface.
Heavy handle tilts pan.	Pan is properly balanced.
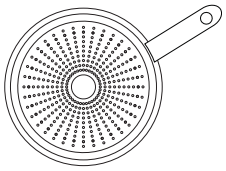 Pan is partially magnetic on the bottom.	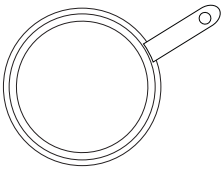 Pan is completely magnetic on the bottom.

Oven Control

On the control panel, the left button will turn on/off the oven and the right button will turn on/off the oven light. The oven light will be automatically turned on/off when the door is opened/closed.

The First knob on the left will control the temperature in the oven with interval of 25 **Fahrenheit**, and the temperature is in **Fahrenheit.**

To start cooking with the oven, put the rack with food into the oven and close the door. Simply rotate the knob to the desired temperature and press the start button. The oven will start heating until reaching the desired temperature. The cooking guide section will provide recommended temperature and rack position for common baked/cooked food.

Oven Racks

Recommended rack positions for various types of foods are provided in the Cooking Guide. Adjusting rack position is one way to impact cooking results. For example, if you would prefer darker tops on cakes, muffins, or cookies, try moving food one rack position higher. If you find foods are too brown on top try moving them down next time.

When baking with multiple pans and on multiple racks, ensure there is at least 1½" between pans to allow sufficient space for air to flow.

Your Oven may have extension racks and/or traditional flat racks.

To avoid possible burns, place the racks in the desired position before you turn the oven on.

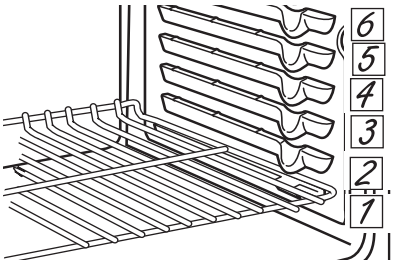

The number of rack positions may vary by model.

Extension Racks

Always pull the rack out by its upper front rail to its fully open position, when placing or removing cookware.

If extension racks are difficult to extend, lubricate the racks with the graphite lubricant provided with your oven. Remove the rack from the oven, remove debris in the side tracks with a paper towel, shake the graphite lubricant and place 4 small drops on the two bottom tracks of the left and right sides. Open and close the rack several times to distribute the lubricant.

To order additional graphite lubricant, see the Consumer Support sections at the end of this manual.

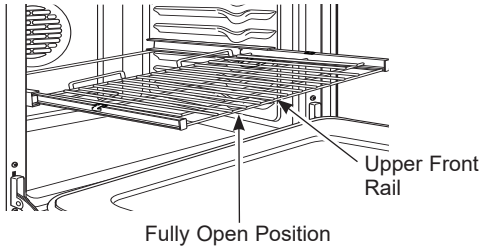

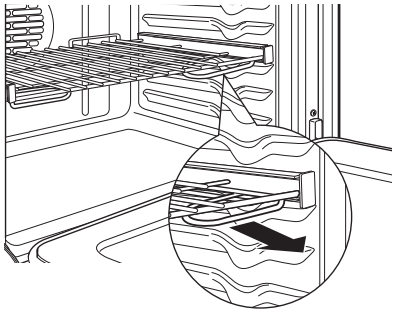

To Remove An Extension Rack:

1. Make sure the rack is pushed all the way into the oven so that side paddles on the rack disengage from the oven support.
2. Slide the rack toward you to the bump (stop position) on the rack support.
3. Firmly grasp both sides of the rack frame and the sliding rack, tilt the front end up and pull it out.

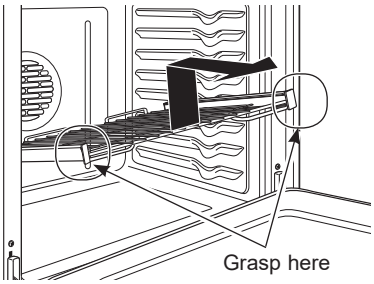

To Replace An Extension Rack:

1. Firmly grasp both sides of the rack frame and the sliding rack.
2. Place the curved end of the rack (stop-locks) onto the oven supports, tilt up the front of the rack and push it in as far as it will go.

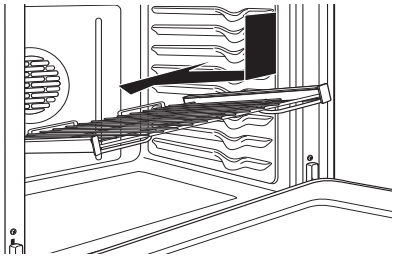

If extension racks are difficult to replace or remove, wipe the oven rack supports with cooking oil. Do not wipe oil on the rack slides.

To Lubricate the Paddle:

Shake lubricant and apply to the moving parts of the paddle mechanisms as shown.

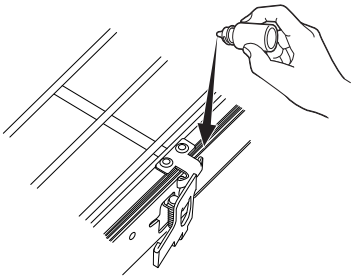

Aluminum Foil and Oven Liners

⚠CAUTION Do not use any type of foil or oven liner to cover the oven bottom. These items can trap heat or melt, resulting in damage to the product and risk of shock, smoke or fire. Damage from improper use of these items is not covered by the product warranty.

Foil may be used to catch spills by placing a sheet on a lower rack, several inches below the food. Do not use more foil than necessary and never entirely cover an oven rack with aluminum foil. Keep foil at least 1-1/2” from oven walls to prevent poor heat circulation.

Cookware

Cookware Guidelines

The material, finish, and size of cookware affect baking performance.

Dark, coated and dull pans absorb heat more readily than light, shiny pans. Pans that absorb heat more readily can result in a browner, crisper, and thicker crust. If using dark and coated cookware check food earlier than minimum cook time. If undesirable results are obtained with this type of cookware consider reducing oven temperature by 25°F next time.

Shiny pans can produce more evenly cooked baked goods such as cakes and cookies.

Glass and ceramic pans heat slowly but retain heat well. These types of pans work well for dishes such as pies and custards.

Air insulated pans heat slowly and can reduce bottom browning.

Keep cookware clean to promote even heating.

Cooking Guide

FOOD TYPE	RECOMMENDED MODE(S)	RECOMMENDED RACK POSITION(S)	ADDITIONAL SUGGESTIONS
Baked Goods			
Layer cakes, sheet cakes, bundt cakes, muffins, quick breads on a Single Rack	Bake Bake Goods	3	Use shiny cookware.
Layer cakes* on Multiple Racks	Bake Convection Bake	2 ext and 5 flat	Use shiny cookware. Ensure adequate airflow (see illustration below).
Chiffon cakes (angel food)	Bake Bake Goods	1	Use shiny cookware.
Cookies, biscuits, scones on a Single Rack	Bake Bake Goods	3	Use shiny cookware.
Cookies, biscuits, scones on Multiple Racks	Convection Bake	2 ext and 5 flat 1 flat, 3 flat, 5 ext	Use shiny cookware. Ensure adequate airflow.
Yeast Breads	Proof	2 or 3	Cover dough loosely.
	Bake Bake Goods	3	
Beef & Pork			
Hamburgers	Broil High	6 flat	Use a broil pan; move food down for more doneness/less searing. Watch food closely when broiling. For best performance center food below the broil heater.
Steaks & Chops	Broil High	6 flat or 5 ext	Use a broil pan; move food down for more doneness/less searing. Watch food closely when broiling. For best performance center food below the broil heater.
Roasts	Bake Convection Roast	2 or 3	Use a low sided pan such as a broil pan. Preheating is not necessary.
Poultry			
Whole chicken	Bake Convection Roast	2 or 3	Use a low sided pan such as a broil pan. Preheating is not necessary.
Bone-in chicken breasts, legs, thighs	Broil Low Bake	3	If breaded or coated in sauce avoid Broil High modes. Broil skin side down first. Watch food closely when broiling. For best performance when broiling, center food below the broil heater.
Boneless chicken breasts	Broil Low Bake	3	Move food down for more doneness/less searing and up for greater searing/browning when broiling. For best performance when broiling, center food below the broil element or burner.
Whole turkey	Bake Convection Roast	1	Use a low sided pan such as a broil pan. Preheating is not necessary.
Turkey Breast	Bake Convection Roast	3	Use a low sided pan such as a broil pan. Preheating is not necessary.
Fish	Broil Low	6 (1/2 inch thick or less) 5 (>1/2 inch)	Watch food closely when broiling. For best performance center food below the broil heater.
Casseroles	Bake	3 or 4	
Frozen Convenience Foods			
Pizza on a Single Rack	Frozen Pizza Single	3	Place food in oven prior to starting mode.
Pizza on Multiple Racks	Frozen Pizza Multi	2 ext and 5 flat	Stagger pizzas left to right, do not place directly over each other.
Potato products, chicken nuggets, appetizers on a Single Rack	Frozen Snacks Single	4 or 5	Place food in oven prior to starting mode. Use dark cookware for more browning/crisping; use shiny cookware for less browning.
Potato products, chicken nuggets, appetizers on Multiple Racks	Frozen Snacks Multi	2 ext and 5 flat	Use dark cookware for more browning/crisping; use shiny cookware for less browning.

*When baking four cake layers at a time use racks 2 ext and 5 flat. Place the pans as shown so that one pan is not directly above another.

Cook food thoroughly to help protect against food borne illness. Minimum safe food temperature recommendations for food safety can be found at **IsItDoneYet.gov**. Make sure to use a food thermometer to take food temperatures.

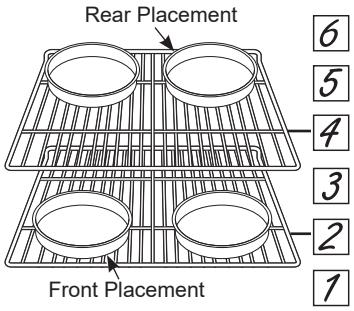

Rack positions

Range – Exterior

Be sure all controls are off and all surfaces are cool before cleaning any part of the range.

⚠WARNING If your range is removed for cleaning, servicing or any reason, be sure the anti-tip device is reengaged properly when the range is replaced. Failure to take this precaution could result in tipping of the range and can result in death or serious burns to children or adults.

Oven Exterior

Do not use oven cleaners, abrasive cleansers, strong liquid cleansers, steel wool, plastic scouring pads, or cleaning powders on the interior or exterior of the oven. Clean with a mild soap and water or vinegar and water solution. Rinse with clean water and dry with a soft cloth. When cleaning surfaces, make sure that they are at room temperature and not in direct sunlight.

If stain on the door vent trim is persistent, use a mild abrasive cleaner and a sponge-scrubber for best results.

Spillage of marinades, fruit juices, tomato sauces and basting liquids containing acids may cause discoloration and should be wiped up immediately. Let hot surfaces cool, then clean and rinse.

Painted Surfaces

Painted surfaces include the sides of the range and the door, top of control panel and the drawer front. Clean these with soap and water or a vinegar and water solution.

Do not use commercial oven cleaners, cleaning powders, steel wool or harsh abrasives on any painted surface, including Black Stainless Steel.

Stainless Steel excluding Black Stainless Steel (on some models)

Do not use a steel wool pad; it will scratch the surface.

Cleaners with oxalic acid such as Bar Keepers Friend Soft Cleanser™ will remove surface rust, tarnish and small blemishes. Use only a liquid cleanser free of grit and rub in the direction of the brush lines with a damp, soft sponge.

To clean the stainless steel surface, use warm sudsy water or a stainless steel cleaner or polish. Always wipe the surface in the direction of the grain. Follow the cleaner instructions for cleaning the stainless steel surface.

To inquire about purchasing cleaning products including stainless steel appliance cleaner or polish, see the Accessories and Consumer Support sections at the end of this manual.

Range – Interior

The interior of your new oven can be cleaned manually or by using Steam Clean or Self Clean modes.
Spillage of marinades, fruit juices, tomato sauces and basting liquids containing acids may cause discoloration and should be wiped up immediately. Let hot surfaces cool, then clean and rinse.

Manual Cleaning

Do not use oven cleaners, strong liquid cleansers, steel wool, or scouring pads on the interior of the oven. For soils on the oven bottom and other enameled surfaces, use a gentle abrasive containing oxalic acid, such as Bar Keepers Friend®, with a non-scratch sponge. Take care not to apply any abrasive cleaners or sponges to the door glass, as it will scratch the reflective coating. The oven interior and door glass may be cleaned using a soft cloth with a mild soap and water, or vinegar and water solution. After cleaning, rinse with clean water and dry with a soft cloth.

Oven Heating Elements

Do not clean the bake element or the broil element. Any soil will burn off when the elements are heated.
The bake element is not exposed and is under the oven floor. Clean the oven floor with warm, soapy water.

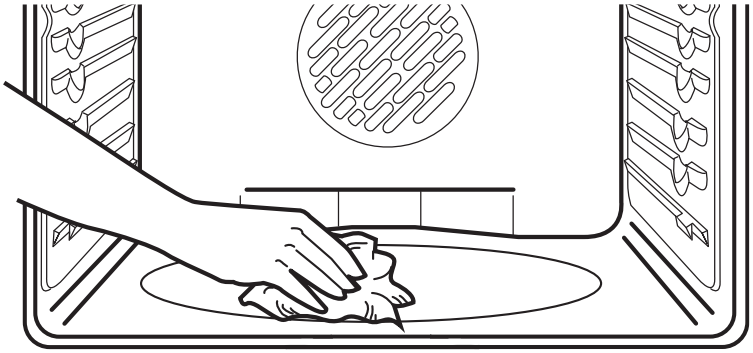

Wipe up heavy soil on the oven bottom.

Glass Cooktop

Normal Daily Use Cleaning

ONLY use Ceramic Cooktop Cleaner on the glass cooktop. Other creams may not be as effective.

To maintain and protect the surface of your glass cooktop, follow these steps:

1. Before using the cooktop for the first time, clean it with Ceramic Cooktop Cleaner. This helps protect the top and makes cleanup easier.
2. Daily use of Ceramic Cooktop Cleaner will help keep the cooktop looking new.
3. Shake the cleaning cream well. Apply a few drops of Ceramic Cooktop Cleaner directly to the cooktop.
4. Use a paper towel or Cleaning Pad for Ceramic Cooktops to clean the entire cooktop surface.
5. Use a dry cloth or paper towel to remove all cleaning residue. No need to rinse.

NOTE: It is very important that you DO NOT heat the cooktop until it has been cleaned thoroughly.

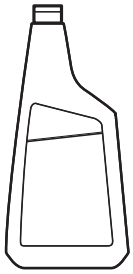

Clean your cooktop after each spill. Use Ceramic Cooktop Cleaner.

Burned-On Residue

NOTE: DAMAGE to your glass surface may occur if you use scrub pads other than those recommended.

1. Allow the cooktop to cool.
2. Spread a few drops of Ceramic Cooktop Cleaner on the entire burned residue area.
3. Using the included Cleaning Pad for Ceramic Cooktops, rub the residue area, applying pressure as needed.
4. If any residue remains, repeat the steps listed above as needed.
5. For additional protection, after all residue has been removed, polish the entire surface with Ceramic Cooktop Cleaner and a paper towel.

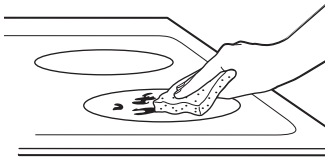

Use a Cleaning Pad for Ceramic Cooktops.

Heavy, Burned-On Residue

1. Allow the cooktop to cool.
2. Use a single-edge razor blade scraper at approximately a 45° angle against the glass surface and scrape the soil. It will be necessary to apply pressure to the razor scraper in order to remove the residue.
3. After scraping with the razor scraper, spread a few drops of Ceramic Cooktop Cleaner on the entire burned residue area. Use the Cleaning Pad to remove any remaining residue.
4. For additional protection, after all residue has been removed, polish the entire surface with Ceramic Cooktop Cleaner and a paper towel.

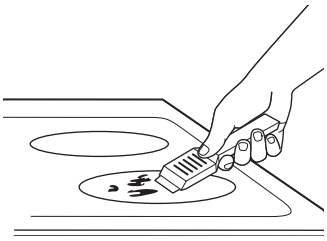

The Ceramic Cooktop Scraper and all recommended supplies are available through our Parts Center. See the Accessories and Consumer Support sections at the end of this manual.

NOTE: Do not use a dull or nicked blade.

Glass Cooktop (Cont.)

Metal Marks and Scratches

1. Be careful not to slide pots and pans across your cooktop. It will leave metal markings on the cooktop surface.

   These marks are removable using the Ceramic Cooktop Cleaner with the Cleaning Pad for Ceramic Cooktops.

2. If pots with a thin overlay of aluminum or copper are allowed to boil dry, the overlay may leave black discoloration on the cooktop.

   This should be removed immediately before heating again or the discoloration may be permanent.

NOTE: Carefully check the bottom of pans for roughness that would scratch the cooktop.

Damage from Sugary Spills and Melted Plastic

Special care should be taken when removing hot substances **to avoid permanent damage of the glass surface**. Sugary spillovers (such as jellies, fudge, candy, syrups) or melted plastics can cause pitting of the surface of your cooktop (not covered by the warranty) unless the spill is removed while still hot. Special care should be taken when removing hot substances.

Be sure to use a new, sharp razor scraper.

Do not use a dull or nicked blade.

1. Turn off all surface units. Remove hot pans.
2. Wearing an oven mitt:
   a. Use a single-edge razor blade scraper to move the spill to a cool area on the cooktop.
   b. Remove the spill with paper towels.
3. Any remaining spillover should be left until the surface of the cooktop has cooled.
4. Don’t use the surface units again until all of the residue has been completely removed.

NOTE: If pitting or indentation in the glass surface has already occurred, the cooktop glass will have to be replaced. In this case, service will be necessary.

Drawer

Removable Drawer

NOTE: For models with an electric warming drawer, before performing any adjustments, cleaning or service, disconnect the range electrical power supply at the household distribution panel by removing the fuse or switching off the circuit breaker. Make sure the warming drawer heating element is cool.

Most cleaning can be done with the drawer in place. However, the drawer may be removed if further cleaning is needed. Use soap and warm water to thoroughly clean.

To remove the drawer:

1. Pull drawer straight out until it stops.
2. Press the left rail release up and press the right rail release down, while pulling the drawer forward and free.

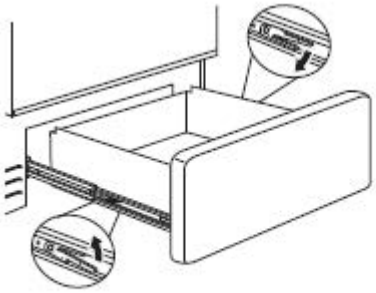

To replace the drawer:

1. Place the left drawer rail around the inner left rail guide and slide it in slightly to hook it.
2. Place the right drawer rail around the inner right rail guide and slide it in slightly to hook it.
3. Slide the drawer all the way in.

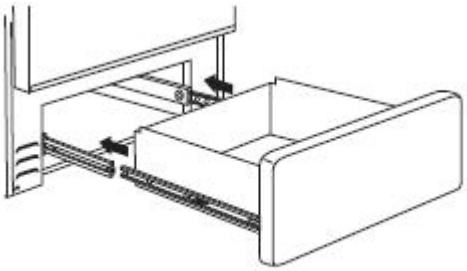

Oven Light

⚠WARNING **SHOCK OR BURN HAZARD:** Before replacing oven light bulb, disconnect the electrical power to the range at the main fuse or circuit breaker panel. Failure to do so may result in electric shock or burn.

⚠CAUTION **BURN HAZARD:** The glass cover and bulb should be removed when cool. Touching hot glass with bare hands or a damp cloth can cause burns.

NOTE: The glass cover should be removed only when cold. Wearing latex gloves may offer a better grip.

Before replacing the bulb, disconnect electrical power to the oven at the main fuse or circuit breaker panel. Let the bulb cool completely before removing it. For your safety do not touch a hot bulb with a damp cloth. If you do the bulb may break.

To remove:

Turn the glass cover counterclockwise 1/4 turn until the tabs of the glass cover clear the grooves of the socket and pull the cover off. Remove the bulb.

To replace:

Put in a new 40-watt appliance bulb. Place the tabs of the glass cover into the grooves of the socket. Turn the glass cover clockwise 1/4 turn.

NOTE:

- A 40-watt appliance bulb is smaller than a standard 40-watt household bulb.
- Reconnect electrical power to the oven once the new bulb is installed.
- For improved lighting inside the oven, clean the glass cover frequently using a wet cloth. This should be done when the oven is completely cool.

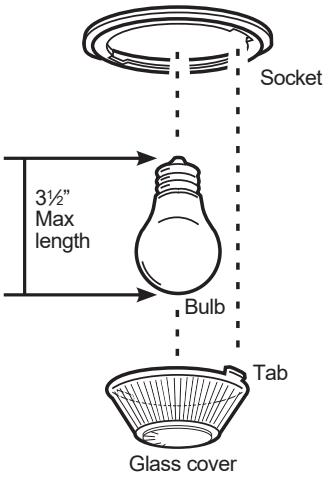

Oven Door

The door is very heavy. Be careful when removing and lifting the door. Do not lift door by the handle.

To Remove the Door:

1. Open the door very carefully

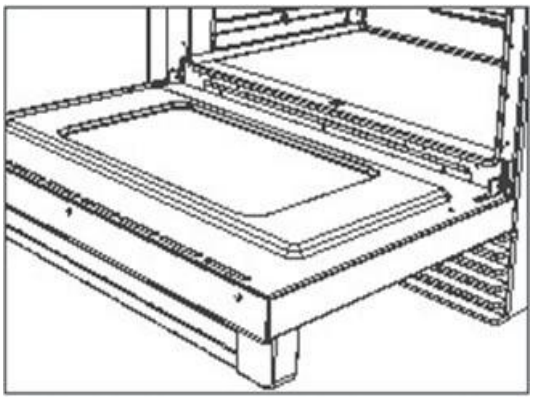

2. Open the levers fully on both sides.

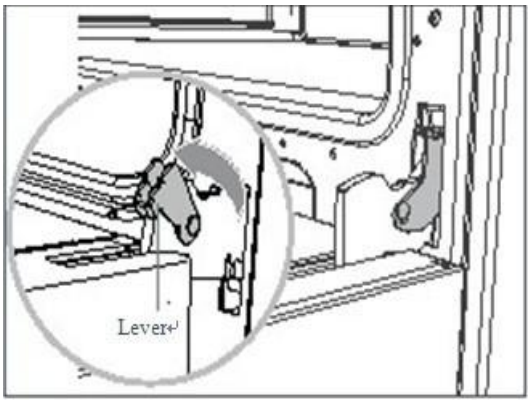

3. Holding the door firmly on both sides

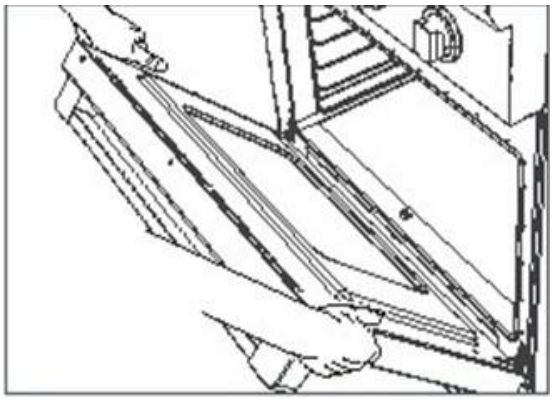

4. Disengage the hinges and remove the gently close it about halfway. door, place on a protected surface.

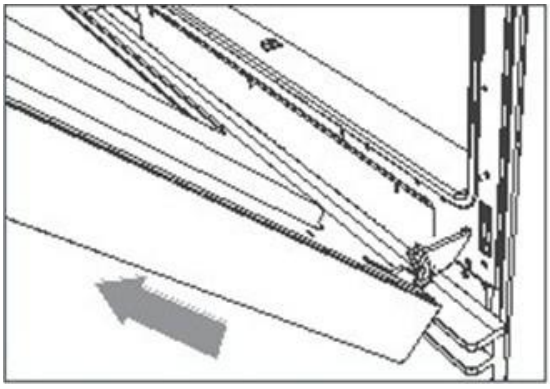

To Replace the Door:

1. Hold the door firmly in an approximately open position

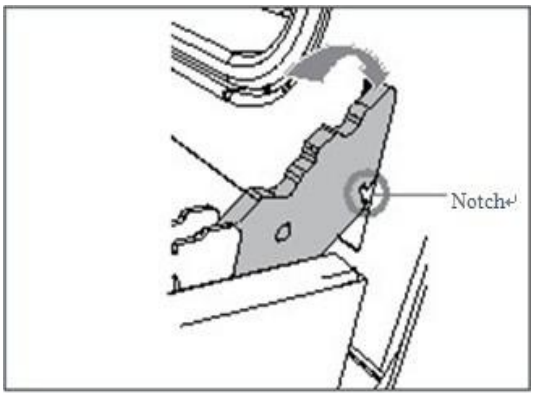

2. Insert the hinge tongues into the slots making sure that the notches on both sides drop into place as shown.

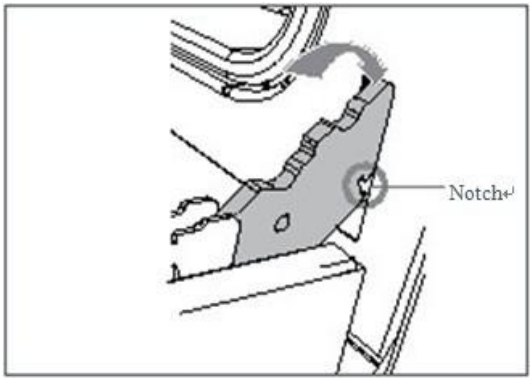

3. Open the door fully as shown,

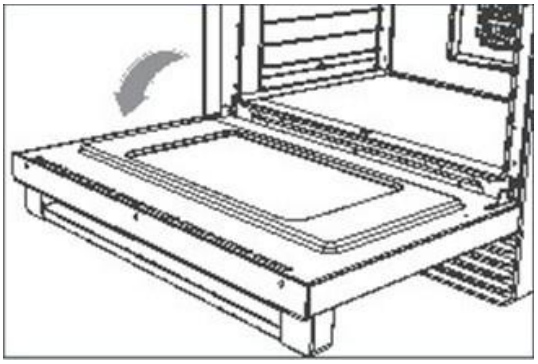

4. Fully close the levers on the left and right hinges, as shown, then close the door.

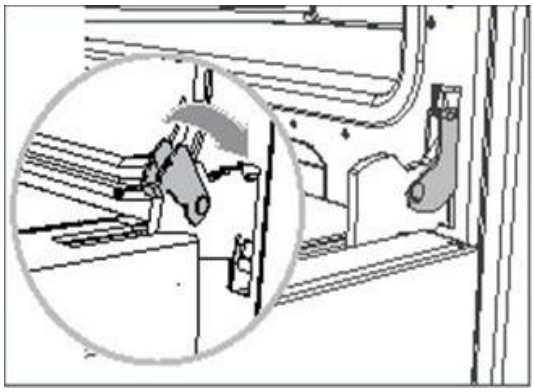

Troubleshooting tips ... Before you schedule service

Save time and money! Review the charts on the following pages first and you may not need to schedule service.

Noted that the Power Control&Indication Sound section will provide extra information for you.

Problem	Possible Cause	What To Do
Surface units do not work properly or flashing power setting.	Improper cookware being used.	Wrong pan type. Use a magnet to check that cookware is induction-compatible. Use a flat induction-capable pan that meets the minimum size for the element being used. See the Pan size and shape section.
	Pan is too small.	Pan size is below the minimum size for the element. See the Pan size and shape section. Use smaller element.
	Pan not positioned correctly.	Center the pan in the cooking zone.
	Pan is not in full contact with glass surface.	Pan must be flat.
	In some areas, the power (voltage) may be low.	Cover pan with a lid until desired heat is obtained.
	A fuse in your home may be blown or the circuit breaker tripped.	Replace the fuse or reset the circuit breaker.
	Cooktop controls improperly set.	Check to see that the control is set properly.
Surface unit setting changed or turned off unexpectedly.	High cooktop temperature.	Allow the internal fan to cool the cooktop. Check if pan boiled dry.
Scratches (may appear as cracks) on cooktop glass surface.	Incorrect cleaning methods being used.	Scratches are not removable. Tiny scratches will become less visible in time as a result of cleaning.
	Cookware with rough bottoms being used or coarse particles (salt or sand) were between the cookware and the surface of the cooktop. Cookware has been slid across the cooktop surface.	To avoid scratches, use the recommended cleaning procedures. Make sure bottoms of cookware are clean before use, and use cookware with smooth bottoms.
Areas of discoloration on the cooktop.	Food spillovers not cleaned before next use.	See the Cleaning the glass cooktop section.
	Hot surface on a model with a light-colored cooktop.	This is normal. The surface may appear discolored when it is hot. This is temporary and will disappear as the glass cools.
Plastic melted to the surface.	Hot cooktop came into contact with plastic placed on the hot cooktop.	See the Glass surface—potential for permanent damage section in the Cleaning the glass cooktop section.
Pitting (or indentation) of the cooktop.	Hot sugar mixture spilled on the cooktop.	Call a qualified technician for replacement.
My new oven doesn't cook like my old one. Is something wrong with the temperature settings?	Your new oven has a different cooking system from your old oven and therefore may cook differently than your old oven.	For the first few uses, follow your recipe times and temperatures carefully. If you still think your new oven is too hot or too cold, you can adjust the temperature yourself to meet your specific cooking preference.
Food does not bake properly.	Oven controls improperly set.	See the Oven Control section.
	Rack position is incorrect or rack is not level.	See the Cooking Guide.
	Incorrect cookware or cookware of improper size being used.	See the Cookware section.
	Oven temperature needs adjustment.	See the Cooking Guide
	Ingredient substitution.	Substituting ingredients can change the recipe outcome.
Food does not broil properly.	Oven controls improperly set.	Make sure you select the broil mode.
	Improper rack position being used.	See Cooking Guide for rack location suggestions.
	Food being cooked in a hot pan.	Make sure cookware is cool.
	Cookware not suited for broiling.	Use a pan specifically designed for broiling.
	The probe is plugged into the outlet in the oven.	Unplug and remove the probe from the oven.
	Aluminum foil used on the broiling pan and grid has not been fitted properly and slit as recommended.	If using aluminum foil conform to pan slits.
	In some areas the power (voltage) may be low.	Preheat the broil element for 10 minutes.
Oven temperature too hot or too cold.	Oven temperature needs adjustment.	See the Oven Control section.

Troubleshooting tips ... Before you schedule service

Problem	Possible Cause	What To Do
Oven does not work or appears not to work.	Plug on range is not completely inserted in the electrical outlet.	Make sure electrical plug is plugged into a live, properly grounded outlet.
	A fuse in your home may be blown or the circuit breaker tripped.	Replace the fuse or reset the circuit breaker.
	Oven controls improperly set.	See Oven Control section.
“Crackling” or “popping” sound.	This is the sound of the metal heating and cooling during both the cooking and cleaning functions.	This is normal.
Why is my range making a "clicking" noise when using my oven?	Your range cycles the heating elements by turning relays on and off to maintain the oven temperature.	This is normal.
Oven door is crooked.	The door is out of position.	Because the oven door is removable, it sometimes gets out of position during installation. To straighten the door, re-install the door. See the Oven Door Section
Oven light does not work.	Light bulb is loose or defective.	Tighten or replace bulb.
	Pad operating light is broken.	Call for service.
Excessive smoking during broiling.	Food too close to burner element.	Lower the rack position of the food.
DOOR LOCK light is on when you want to cook.	The oven door is locked because the temperature inside the oven has not dropped below the locking temperature.	Allow the oven to cool.
Oven or cooktop will not stay set.	Function error.	Disconnect all power for at least 30 seconds and then reconnect power. If repeating, call for service.
“Burning” or “oily” odor emitting from the vent.	This is normal in a new oven and will disappear in time.	To speed the process, manual clean the oven for multiple times.
Strong odor.	An odor from the insulation around the inside of the oven is normal for the first few times the oven is used.	This is temporary and will go away after several uses.
Fan noise.	A convection fan may automatically turn on and off.	This is normal. The fan is designed to operate intermittently to maximize cooking evenness. The convection fan will operate during preheat of the bake cycle. The fan will turn off after the oven is heated to the set temperature. This is normal.
	A cooling fan may automatically turn on and off.	This is normal. The cooling fan will turn off and on to cool internal parts. It may run after the oven is turned off.
My oven door glass appears to be "tinted" or have a "rainbow" color. Is this defective?	No. The inner oven glass is coated with a heat barrier to reflect the heat back into the oven to prevent heat loss and keep the outer door cool while baking.	This is normal. Under certain light or angles, you may see this tint or rainbow color.
Sometimes the oven takes longer to preheat to the same temperature.	Cookware or food in oven.	The cookware or food in the oven will cause the oven to take longer to preheat. Remove items to reduce preheat time.
	Number of racks in oven.	Adding more racks to the oven will cause the oven to take longer to preheat. Remove some racks.
Oven racks are difficult to slide.	The shiny, silver-colored racks were cleaned in a self-clean cycle.	Apply a small amount of vegetable oil to a paper towel and wipe the edges of the oven racks with the paper towel. Do not spray with lubricant sprays.
Steam from the vent.	When using the ovens, it is normal to see steam coming out of the oven vents. As the number of racks or amount of food being cooked increases, the amount of visible steam will increase.	This is normal.

Power Control

The gear number on the knob and its coordinated rated power are shown in the table below. Noted that the stove is protected from overheating, and when the stove reaches its rated power, continuous heating will not be applied. Also noted that the stove will automatically reduce the **rated power** to Gear 8 after being in Gear 9 for 10 minutes as another self-protection method.

Gear / Watts	1	2	3	4	5	6	7	8	9
Top Left	200	300	600	800	1000	1200	1500	1800	2500
Bottom Left	200	300	600	800	1000	1200	1500	1800	2500
Top Right	200	300	600	800	1000	1100	1200	1400	1800
Bottom Right	200	400	600	1000	1400	1600	2000	2400	3600

Indication Sound

When the stove encounters operational or conditional problems, indication light will be flashing and certain sounds will be generated as indications for users. The type of the sound and its correlated potential problems are listed below. Noted that the sounds are different in frequency and for situations other than those on the list, please contact the customer service for further help.

Type of the sound	Potential Problem
Two beeps and shut down	**No pans are on the stove**
Two long beeps followed by three short beeps every 5 seconds	**Voltage is too low, sound will continue until power is back to normal**
Two long beeps followed by four short beeps every 5 seconds	**Voltage is too high, sound will continue until power is back to normal**
Four long beeps followed by three short beeps every 5 seconds	**Temperature of IGBT sensor is too high. The sounds will disappear after warning twice**
Four long beeps followed by five short beeps every 5 seconds	**NTC1 sensor malfunction, the sound will continue until the sensor is back to normal**
Four long beeps followed by four short beeps every 5 seconds	
Three long beeps followed by five short beeps every 5 seconds	**NTC2 sensor malfunction, the sound will continue until the sensor is back to normal**
Three long beeps followed by four short beeps every 5 seconds	

Thor Kitchen Warranty & Service Policy

This product has been manufactured by Thor Group, 13831 Oaks Avenue Chino, CA 91710.
Thor Group disclaims all express warranties except for the following:
This warranty applies to products purchased and located in the United States. Products purchased or located outside this area are excluded.
The warranty does not apply to damage resulting from abuse, accident, natural disaster, loss of electrical power to the product for any reason, alteration, outdoor use, improper installation, and improper operation, repair or service of the product by anyone other than an authorized Thor Group, service agency or representative.

Warranties and Duration:

Full warranty for Parts and Labor: **2 years**
If your Thor Kitchen product is used in other than Single Family Residential Usage, this will be considered commercial usage and product will carry a 6-month parts and labor warranty (6-month Parts Warranty for the products with parts labor warranty only) from the date of purchase.
Implied warranties terminate upon expiration of the limited warranty. Some states do not allow limitations on how long implied warranty lasts, so the above limitation may not apply to your implied warranty.

- **What Thor will cover:**
  All repair labor and cost of replacement parts found to be defective due to material and workmanship. Service must be provided by a Thor Group Authorized Service Agency during normal working hours.
  For a Service Agency nearest you, please call 877-288-8099.

- **What Thor will NOT cover:**
  Service to instruct you on how to use your range to correct house wiring, replace or repair house fuses. Service to correct the installation of your range.

- Repairs when your range is used for other than normal, single-family household use or when it is used in a manner that is contrary to published user or operator instructions and/or installation instructions.

- Cosmetic damage, including chips, dents, scratches or other damage to the finish of your range, unless such damage results from defects in materials or workmanship and is reported to Thor Group within 30 days from the date of purchase.

- Costs associated with the removal from your home of your range for repairs. This range is designed to be repaired in the home and only in-home service is covered by this warranty.

- Damage resulting from misuse, alteration, accident, abuse, fire, flood, acts of God, improper installation, installation not in accordance with electrical, or use of consumables or cleaning products not approved by Thor Group.

- Service to repair or replace consumable parts. Consumable parts are not included in the warranty coverage.

- The removal and re-installation of your range if it is installed in an inaccessible location or is not installed in accordance with published installation instructions.

- This warranty is void if the factory applied serial number has been altered or removed from your range.

- Repairs to parts or systems resulting from unauthorized modifications made to the appliance.

- Expenses for travel and transportation for product service if your range is located on a remote area where service by an authorized Thor Group service provider is not available.

  NOTE: The warranty applies to appliances purchased and used for personal, family or household purposes only. It does not cover appliances used for commercial applications. Should the appliance be sold by the original purchaser during the warranty period, the warranty shall extend to the new owner until the expiration date of the original purchaser's warranty period.

Warranty and Product Registration

Thor Group is not responsible for incidental or consequential damages. Under no circumstances will Thor Group's liability exceed the cost that you paid for the product. Some states do not allow the exclusion or limitation of incidental or consequential damages, so the above limitations or exclusion may not apply to you.

This warranty gives you specific legal rights, and you may also have other rights that vary from state to state. Whenever you call our customer service at 877-288-8099 (Thor Kitchen RANGE) for technical information and parts sales in the United States or to request service for your appliance, please have your complete model number and serial number ready. The model and serial number can be found on the product data plate. Please enter the information requested in the spaces provided.

Note:You must provide proof of purchased or installation date for in-warranty service.

Consumer Support

Thor Website

Have a question or need assistance with your appliance? Try the Thor website 24 hours a day, any day of the year! You can also shop for more great Thor products and take advantage of all our on-line support services designed for your convenience. In the US: **https://thorkitchen.com/**

Register Your Appliance

Register your new appliance on-line at your convenience! Timely product registration will allow for enhanced communication and prompt service under the terms of your warranty, should the need arise.
In the US: **https://thorkitchen.com/registration-page/**

Schedule Service

Expert repair service is only one step away from your door. Get on-line and schedule your service at your convenience any day of the year. In the US: **https://thorkitchen.com/need-service/**

Parts and Accessories

Parts and extra accessories can be purchased on-line at your need.

In the US: **https://thorkitchen.com/parts/**

Instructions contained in this manual cover procedures to be performed by any user. Other servicing generally should be referred to qualified service personnel. Caution must be exercised, since improper servicing may cause unsafe operation.

Contact Us

Office Address:
13831 Oaks Avenue, Chino, CA 91710

After-Service & Warranty:
Phone: +1-87-288-8099
E-mail: service@thorgroup.us

Sales & Products Inquiry:
E-mail: sales@thorgroup.us

Shipments & Logistics:
E-mail: shipping@thorgroup.us

Other Inquiry:
E-mail: info@thorgroup.us

Type of the sound	Potential Problem
Two beeps and shut down	No pans are on the stove
Two long beeps followed by three short beeps every 5 seconds	Voltage is too low, sound will continue until power is back to normal
Two long beeps followed by four short beeps every 5 seconds	Voltage is too high, sound will continue until power is back to normal
Four long beeps followed by three short beeps every 5 seconds	Temperature of IGBT sensor is too high. The sounds will disappear after warning twice
Four long beeps followed by five short beeps every 5 seconds	NTC1 sensor malfunction, the sound will continue until the sensor is back to normal
Four long beeps followed by four short beeps every 5 seconds	
Three long beeps followed by five short beeps every 5 seconds	NTC2 sensor malfunction, the sound will continue until the sensor is back to normal
Three long beeps followed by four short beeps every 5 seconds	