verify No.109083828398

위변조방지/진위확인
www.docuqr.com

TEST REPORT

KCTL Inc.
52-20, Sinjeong-ro 41beon-gil, Giheung-gu,
Yongin-si, Gyonggi-Do, Korea
TEL: 82-31-326-6700 FAX: 82-505-299-8311
www.kctl.co.kr

1. Client

- Name : FINETEK Co.,Ltd.
- Address : 22, 4sandan 6-gil, Jiksan-eup, Seobuk-gu, Cheonan-si, Chungcheongnam-do, Republic of Korea.
- Date of Receipt : 2019-05-14

2. Use of Report : -

3. Name of Product and Model : ESL(Electronic Shelf Label) / FNT75R

4. Manufacturer and Country of Origin : FINETEK VN / Vietnam

5. Date of Test : 2019-05-23 to 2019-05-28

6. Test method used : FCC Part 15 Subpart B, Class B

7. Test Results : Refer to the test result in the test report

Affirmation	Tested by Name : Bongjae Shin (Signature)	Technical Manager Name : Jaeho Park (Signature)

2019-08-05

KCTL Inc.

As a test result of the sample which was submitted from the client, this report does not guarantee the whole product quality. This test report should not be used and copied without a written agreement by KCTL Inc.

REPORT REVISION HISTORY

Date	Revision	Page No
2019-06-04	Originally issued	-
2019-08-05	Revised the comment of test site, maximum transmit power, frequency range, FCC Rule parts, fundamental frequency limits and test photo	5p, 7p, 10p, 11p, 14p, 19p

This report shall not be reproduced except in full, without the written approval of KCTL Inc. This document may be altered or revised by KCTL Inc. personnel only, and shall be noted in the revision section of the document. Any alteration of this document not carried out by KCTL Inc. will constitute fraud and shall nullify the document.

Contents

1. Applicant information 4
2. Laboratory information 5
3. Test system configuration 7
3.1 Operation environment 7
3.2 Measurement Uncertainty 8
3.3 Measurement Program 9
4. Description of EUT 10
4.1 General information 10
4.2 Product description 11
4.3 Auxiliary equipments 11
4.4 Test configuration 12
4.5 Operating conditions 13
5. Summary of test results 14
5.1 Summary of EMI emission test results 14
6. Test results 15
6.1 Radiated Emission 15

1. Applicant information

Applicant:	FINETEK Co.,Ltd.
Address:	22, 4sandan 6-gil, Jiksan-eup, Seobuk-gu, Cheonan-si, Chungcheongnam-do, Republic of Korea.
Telephone:	+82-41-412-6894
Fax:	+82-41-583-1701
E-mail:	sypark@ifinetek.com
Contact name:	Sun Young Park

Manufacturer:	FINETEK VN
Address:	Lot No A1-3, Road N2, A Area, Hoa Mac Industrial Zone, Hoa Mac Town, Duy Tien District, Ha Nam Province, Vietnam

KCTL

2. Laboratory information

Address

KCTL Inc. (Yongin Lab.)

52-20, Sinjeong-ro 41beon-gil, Giheung-gu, Yongin-si, Gyonggi-Do, Korea

Telephone Number: 82 31 326 6700

Facsimile Number: 82 505 299 8311

FCC Site Designation No: KR0040

VCCI Registration No. : C-2915, T-11320, R-14386, G-10547, G-20079

KOLAS NO.: KT231

SITE MAP

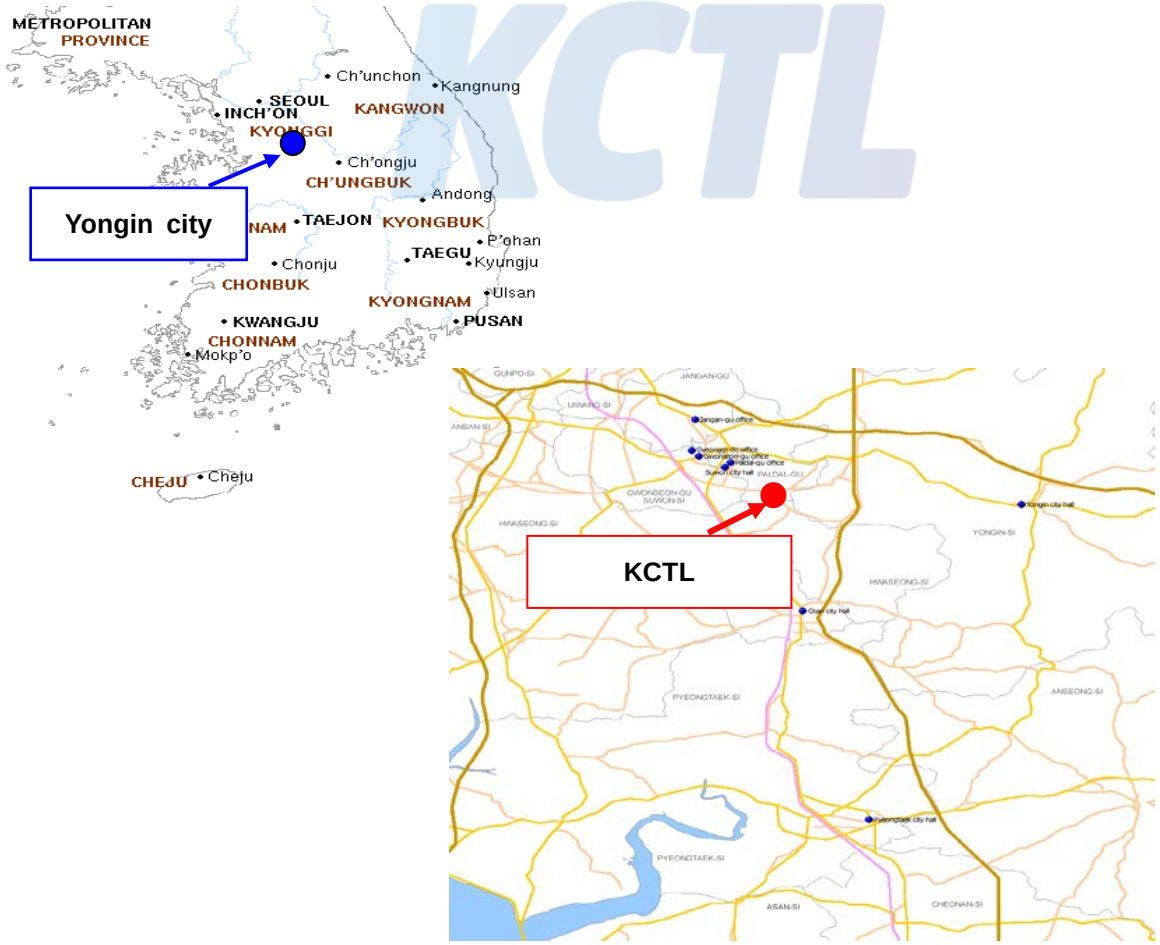

KCTL Inc. (Suwon Lab.)

65, Sinwon-ro, Yeongtong-gu, Suwon-si, Gyeonggi-do, 443-390, Korea

Telephone Number: 82 31 285 0894

Facsimile Number: 82 505 299 8311

FCC Site Designation No: KR0040

VCCI Registration No. : R-3327, G-198, C-3706, T-1849

Industry Canada Registration No. : 8035A

KOLAS NO.: KT231

SITE MAP

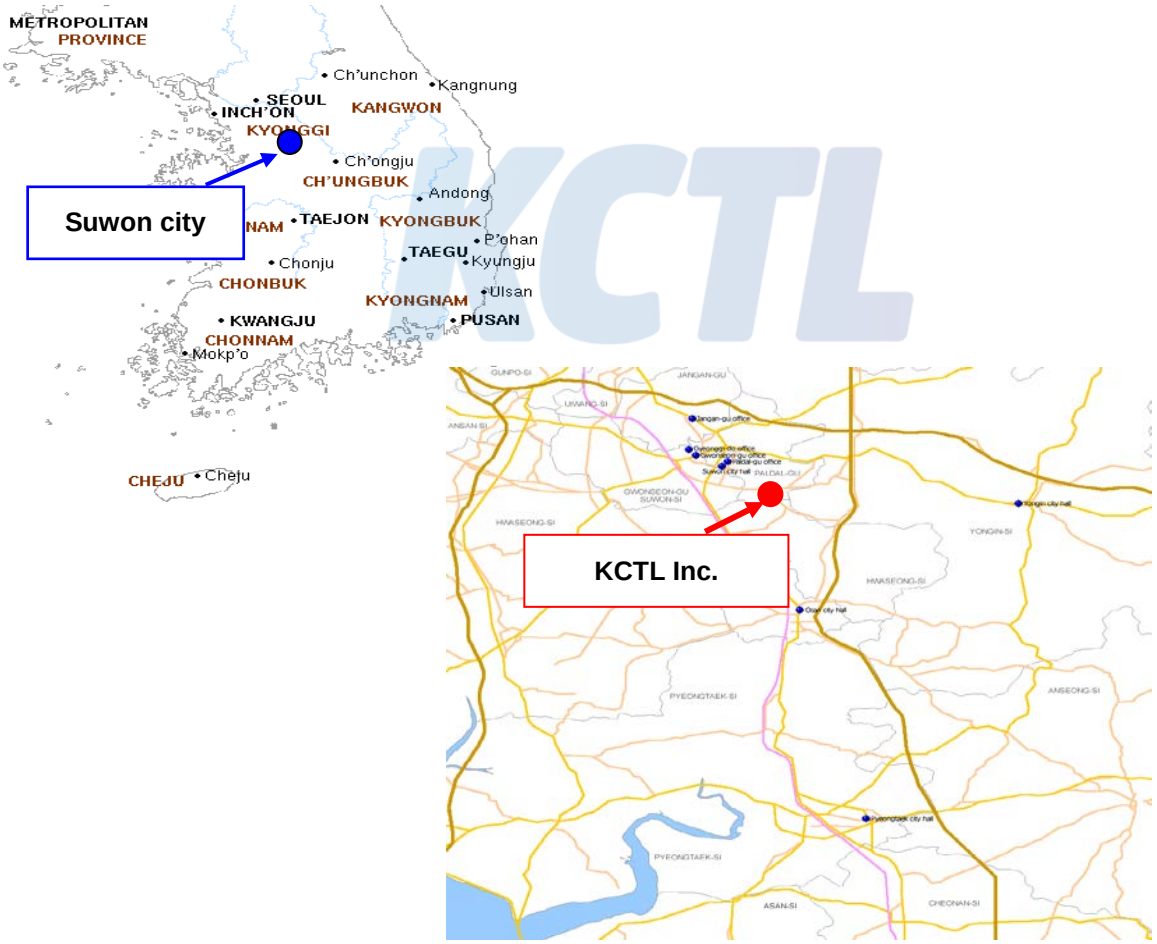

3. Test system configuration

3.1 Operation environment

	Temperature	Humidity	Pressure
Chamber 10 m(RE)	21.7 °C	48.9 % R.H.	-
Chamber 10 m(RE)	22.0 °C	42.4 % R.H.	-
Shielded room(CE)	-	-	-

Test site

These testing items were performed following locations;

Test item	Test site
Conducted Emission	Shielded Room
Radiated Emission (Below 1 GHz)	10 m Chamber (Yongin Lab.)
Radiated Emission (Above 1 GHz)	10 m Chamber (Suwon Lab. 4F)

This test report shall not be reproduced, except in full, without the written approval.

3.2 Measurement Uncertainty

All measurements involve certain levels of uncertainties, especially in field of EMC.
The factors contributing to uncertainties are test receiver, cable loss, antenna factor calibration, Antenna directivity, antenna factor variation with height, antenna phase center variation, antenna frequency interpolation, measurement distance variation, site imperfection, mismatch, and system repeatability. Based on CISPR 16-4-2, the measurement uncertainty level with a 95 % confidence level was applied.

Conducted Emission measurement_AMN (Confidence level about 95 %, *k* = 2)		
Shielded Room (CE#1)	9 kHz ~ 150 kHz : 2.24 dB	
	150 kHz ~ 30 MHz : 2.49 dB	
Shielded Room (CE#2)	9 kHz ~ 150 kHz : 2.10 dB	
	150 kHz ~ 30 MHz : 2.41 dB	
Conducted Emission measurement_AAN (Confidence level about 95 %, *k* = 2)		
Shielded Room	150 kHz ~ 30 MHz	AAN with aLCL = 55…40 dB : 3.54 dB
		AAN with aLCL = 65…50 dB : 3.98 dB
		AAN with aLCL = 75…60 dB : 4.48 dB
Radiated Emission measurement (Confidence level about 95 %, *k* = 2)		
10 m Chamber	30 MHz ~ 1000 MHz (Horizontal)	3 m : 4.84 dB
		10 m : 4.66 dB
	30 MHz ~ 1000 MHz (Vertical)	3 m : 4.78 dB
		10 m : 4.62 dB
	1 GHz ~ 6 GHz	3 m : 5.26 dB
Disturbance Power Electromagnetic Fields (Confidence level about 95 %, *k* = 2)		
Shielded Room	30 MHz ~ 300 MHz	3.73 dB

3.3 Measurement Program

These test items were performed by software programs;

Test item	Measurement Program	Used
Conducted Emission	EP5CE_V 5.4.0(TOYO)	☐
Radiated Emission	EP5RE_V 4.6.0(TOYO) EP5RE_V 5.11.0(TOYO)	☒
Disturbance Power	EMC32_V 9.12(R&S)	☐
Radiated Electromagnetic Disturbance	EMC32_V 9.2(R&S)	☐
Discontinuous interference	AFJ Click Meter Soft CMS_V 1.0	☐
Radiated RF Immunity	TDK Radiated Immunity Lab_V 10.99.0.2	☐
Conducted RF Immunity	TDK Conducted Immunity Lab_V 3.33	☐
Immunity of Broadcast Receivers	T80-K1_V 2.21(R&S)	☐
Harmonics current emissions, Voltage fluctuations and flicker	IEC Soft_V 2.4f(N4L)	☐

This test report shall not be reproduced, except in full, without the written approval.

4. Description of EUT

4.1 General information

Model	FNT75R
Display	e-Paper 7.5" Matrix
Wireless Communication	IEEE 802.15.4 Based on 2.4GHz ISM Band, Data Rate: 250Kbps, Service Area : Radius Max. 30m (Line of Sight)
Maximum Transmit Power	2.4GHz - 802.15.4 (Zigbee) 2 dBm
Approval	TBD
ROHS	ROHS Compliance
Power	Coin Battery CR2450 x 4
Operating Temperature	0°C ~ 40°C / 41°F~104°F
Size	117.1mm x 175mm x 13.2mm
Weight	184g

4.2 Product description

Type of product	ESL(Electronic Shelf Label)
Model name (Basic)	FNT75R
Model name (Variant)	FNT75F, FNT75Y
Difference	Display Color
Serial no	-
Testing voltage	DC 3 V
Input rating	DC 3 V
Frequency range	2.405 MHz ~ 2 480 MHz(Zigbee)
Note	-

4.3 Auxiliary equipments

Type	Model / Part #	S/N	Manufacturer
ESL (Electronic Shelf Label)	FNTAP	-	FINETEK VN
ADAPTER	SW20-05003000-KC	-	ShenZhen Top-Asia Electronics Co., Limited.
DIGITAL REMOTE CONTROLLER	-	-	-
Note PC	MS-16J-1	-	MSI
AC/DC ADAPTER #1	ADP-120MH D	-	DELTA ELECTRONICS (JIANGSU) LTD.
Wireless AP	ipTIME A1004NS		EMF networks&multimedia
AC/DC ADAPTER #2	HB30-120200SPA		SHEN ZHEN CITY HONG BEN ELECTRONIC CO.,LTD.

4.4 Test configuration

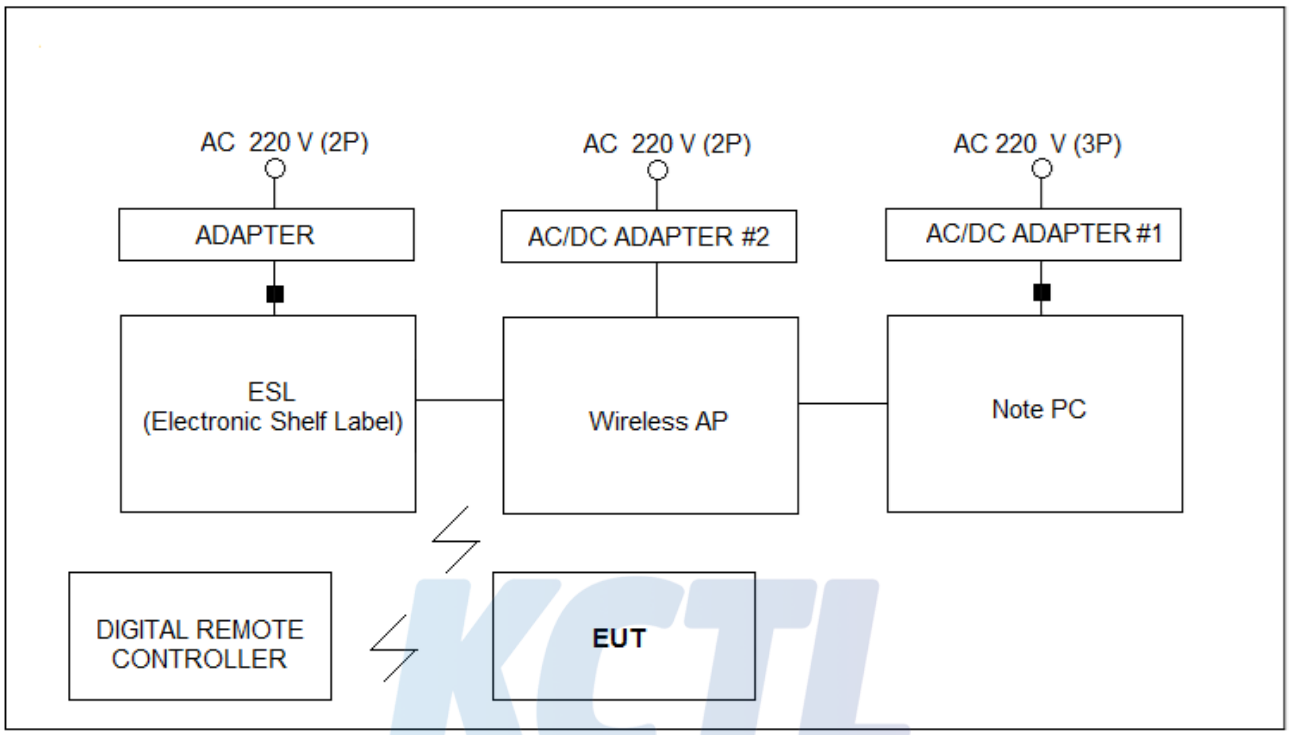

	Start		End		Cable	
	Name	I/O port	Name	I/O port	Length (m)	Spec.
1	**EUT**	-	-	-	-	-
2	ESL(Electronic Shelf Label)	DC In	ADAPTER	-	1.6	Unshield (Core 1EA)
3		LAN (RJ-45)	Wireless AP	LAN (RJ-45)	3.0	Unshield
4	ADAPTER	Power	AC Main	-	1.0	Unshield
5	DIGITAL REMOTE CONTROLLER	-	-	-	-	-
6	Wireless AP	DC In	AC/DC ADAPTER #2	-	1.6	Unshield
7		LAN (RJ-45)	Note PC	LAN (RJ-45)	3.0	Unshield
8	Note PC	DC In	AC/DC ADAPTER #1	-	1.6	Unshield (Core 1EA)
9	AC/DC ADAPTER #1	Power	AC Main	-	1.4	Unshield
10	AC/DC ADAPTER #2	Power	AC Main	-	1.0	Unshield

4.5 Operating conditions

The EUT was configured as normal intended use.

Test mode	Description
#1	Wireless Mode

5. Summary of test results

In the above configuration tested, The EUT complied with the requirement of the specification

5.1 Summary of EMI emission test results

FCC Part 15 Subpart B (Class B)

ANSI C63.4 – 2014

Applied	Test items	Test method	Result
☐	Conducted Emission	15.107 Conducted limits	N/A Note)
☒	Radiated Emission	15.109 Radiated emission limits	Pass

Note: The EUT used CR2450 Lithium battery(DC 3V), so conducted emission was not applicable.

KCTL

6. Test results

6.1 Radiated Emission

Test specification	FCC Part 15, Section 15.109(g), Class B		
Testing voltage	DC 3 V		
Test facility	10 m Chamber (Yongin Lab.)		
Test distance	3 m		
Date	2019. 05. 23		
Temperature (°C)	21.7 °C	Humidity (% R.H.)	48.9 % R.H.
Remarks	Pass		

Test specification	FCC Part 15, Section 15.109(g), Class B		
Testing voltage	DC 3 V		
Test facility	10 m Chamber (Suwon Lab. 4F)		
Test distance	3 m		
Date	2019. 05. 28		
Temperature (°C)	22.0 °C	Humidity (% R.H.)	42.4 % R.H.
Remarks	Pass		

6.1.1 Limits of radiated emission measurement

☒ Limits below 1 GHz

Frequency [MHz]	Class A (dB(μV/m)) @ 10 m	Class B (dB(μV/m)) @ 3 m
30-88	39.08	40.00
88-216	43.52	43.52
216-960	43.44	46.02
Above 960	49.54	53.98

*** Note- Alternative standard: CISPR, Pub. 22 ***

☒ Limits above 1 GHz

Frequency [GHz]	Class A @ 3 m		Class B @ 3 m	
	Peak limit (dB(μV/m))	Average limit (dB(μV/m))	Peak limit (dB(μV/m))	Average limit (dB(μV/m))
Above 1 GHz	79.5	59.5	74	54
Note - The lower limit applies at the transition frequency.				

6.1.2 Measurement procedure

The test was done at a 10 m Chamber with a quasi-peak detector.
EUT was placed on a non-metallic table height of 0.8 m above the reference ground plane.
Cables were folded back and forth forming a bundle 0.3 m to 0.4 m long and were hanged at a 0.4 m height to the ground plane. Cables connected to EUT were fixed to cause maximum emission.
Test was made with the antenna positioned in both the horizontal and vertical planes of polarization.
The measurement antenna was varied in height above the conducting ground plane to obtain the maximum signal strength.

6.1.3 Used equipments

Equipment	Model no.	Serial no.	Makers	Next Cal. Date	Used
EMI Test Receiver	ESCI7	100872	R&S	2019.07.12	☒
Amplifier	310N	353132	SONOMA	2019.09.18	☒
Attenuator	8491B 6dB	MY39270721	KEYSIGHT	2019.09.18	☒
Bi-Log Antenna	CBL 6112D	40522	TESEQ	2020.03.06	☒
Spectrum Analyzer	FSV40	100988	R&S	2020.01.04	☒
Antenna Mast	MA4640-XP-ET	-	Innco Systems	-	☒
Turn Table	TT3.0-3t	-	MATVRO	-	☒
DOUBLE RIDGED HORN ANTENNA	3117-PA	00161083	ETS-LINDGREN	2019.09.14	☒

This test report shall not be reproduced, except in full, without the written approval.

6.1.4 Sample calculation

The field strength is calculated adding the antenna Factor, cable loss and, Antenna pad adding, subtracting the amplifier gain from the measured reading.
The sample calculation is as follow:

-Below 1 GHz

Result QP[dB(μV/m)] = Reading QP[dB(μV)] + c.f(Antenna Factor [dB/m] + Cable Loss [dB] + 6 dB Att [dB] − Amp Gain [dB])

Result QP : Result, Reading QP : Meter Reading, c.f : Correction Factor

Margin (QP) = Limit (QP) – Results (QP)

Note1) QP : Abbreviation of Quasi-Peak

-Above 1 GHz

Result PK/CAV [dB(μV/m)] = Reading PK/CAV [dB(μV)] + c.f(Antenna Factor [dB/m] + Cable Loss [dB] − Amp Gain [dB])

Result PK/CAV : Result, Reading PK/CAV : Meter Reading, c.f : Correction Factor

Margin (PK/CAV) = Limit (QP/CAV) – Results (QP/CAV)

Note1) PK : Abbreviation of Peak

Note2) CAV : Abbreviation of CISPR Average

If Reading is 30 dBμV, Antenna Factor 12 dB/m, Cable Loss 5 dB, Attenuator 6 dB, Amp Gain 35 dB

The result is

30 + 12 + 5 + 6 - 35 = 18 dB(μV/m)

6.1.5 Radiated emission measurement result

*** Graph and Data**

* 30 MHz ~ 1 GHz

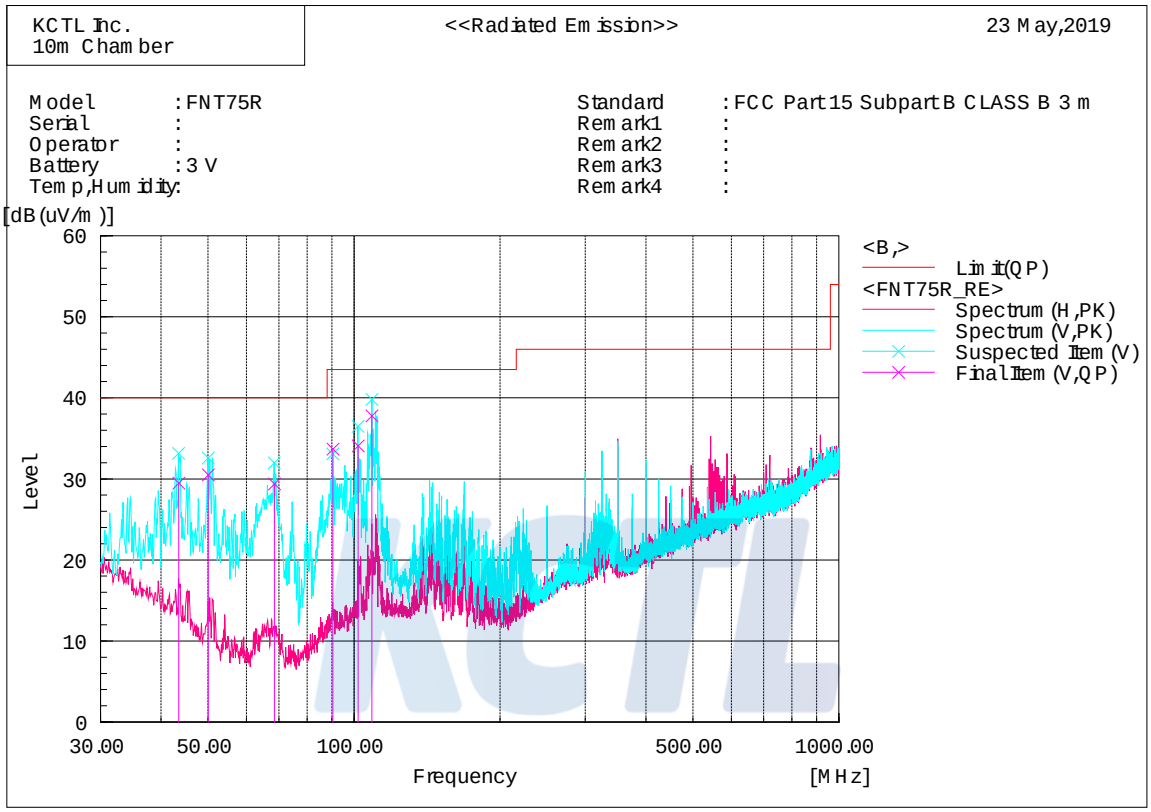

Final Result

No.	Frequency [MHz]	(P)	Reading QP [dB(uV)]	c.f [dB(1/m)]	Result QP [dB(uV/m)]	Limit QP [dB(uV/m)]	Margin QP [dB]	Height [cm]	Angle [deg]	Remark
1	43.480	V	43.9	-14.4	29.5	40.0	10.5	100.0	35.0	
2	50.058	V	47.9	-17.4	30.5	40.0	9.5	100.0	124.0	
3	68.485	V	48.8	-19.4	29.4	40.0	10.6	200.0	310.0	
4	90.405	V	48.8	-15.1	33.7	43.5	9.8	100.0	275.0	
5	101.955	V	48.2	-14.1	34.1	43.5	9.4	300.0	276.0	
6	108.805	V	51.3	-13.5	37.8	43.5	5.7	100.0	280.0	

* 1 GHz ~ 18 GHz

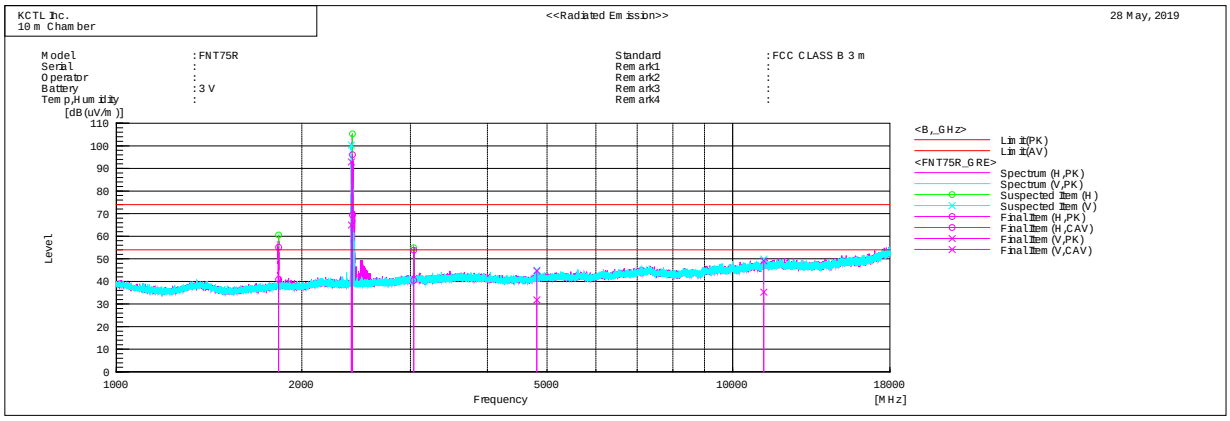

Final Result

No.	Frequency [MHz]	(P)	Reading PK [dB(uV)]	Reading CAV [dB(uV)]	c.f [dB(1/m)]	Result PK [dB(uV/m)]	Result CAV [dB(uV/m)]	Limit PK [dB(uV/m)]	Limit AV [dB(uV/m)]	Margin PK [dB]	Margin CAV [dB]	Height [cm]	Angle [deg]
1	1833.742	H	69.7	55.5	-14.6	55.1	40.9	74.0	54.0	18.9	13.1	230.0	75.0
2	2405.570	V	105.2	77.3	-12.3	92.9	65.0	--------	--------	-18.9	-11.0	0.0	0.0
3	2415.621	H	108.4	81.7	-12.3	96.1	69.4	--------	--------	-22.1	-15.4	0.0	0.0
4	3038.452	H	63.4	50.1	-9.6	53.8	40.5	74.0	54.0	20.2	13.5	150.0	44.0
5	4810.641	V	50.1	37.3	-5.4	44.7	31.9	74.0	54.0	29.3	22.1	100.0	27.0
6	11235.560	V	48.1	34.3	1.0	49.1	35.3	74.0	54.0	24.9	18.7	130.0	348.0

- Excluded Band: (2 280 ~ 2 520) MHz
- Fundamental Frequency: 2 405.570 MHz(Ver.), 2 415.621 MHz(Hor.)