Sub GHz FSK/OOK Transceiver Module

DATASHEET

TAL
ND

GENERAL DESCRIPTION

The LJ1269H is a transceiver Modulecapable of operation over a wide frequency range, including the 315,433,868 and 915MHz license-free ISM (Industry Scientific and Medical) frequency bands. All major RF communication param eters are programmable and m ost of them can be dynam ically set. The LJ1269H offers the unique advantage of programm able narrow-band and wide- band communication modes. The LJ1269H is optim ized for low power consumption while offering high RF output power and channelized operation. Com pliance ETSI and FCC regulations.

In order to better use LJ1269H modules, this specification also involves a large num ber of the param eters and functions of its core chip RF69H's,including those IC pins which are not leaded out. All of these can help customers gain a better understanding of the performance of LJ1269H modules, and enhance the application skills.

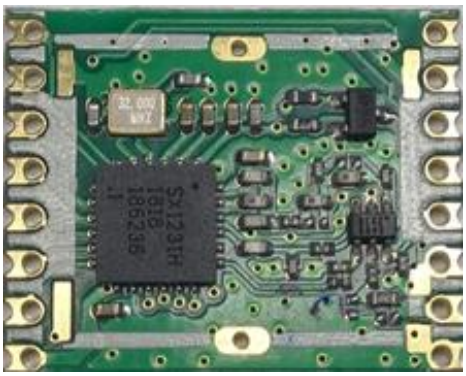

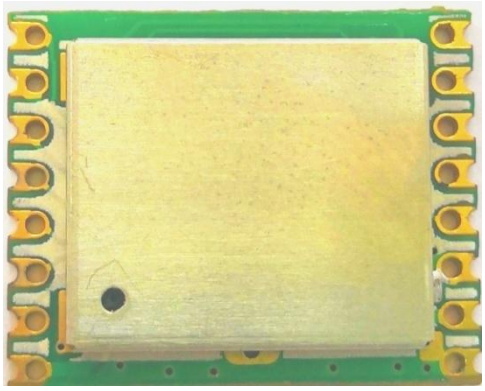

KEY PRODUCT FEATURES

- +20 dBm - 100 mW Power Output Capability
- High Sensitivity: down to -120 dBm at 1.2 kbps
- High Selectivity: 16-tap FIR Channel Filter
- Bullet-proof front end: IIP3 = -18 dBm, IIP2 = +35 dBm,80 dB Blocking Immunity, no Image Frequency response
- Low current: Rx = 16 mA, 100nA register retention
- Programmable Pout: -18 to +20 dBm in 1dB steps
- Constant RF performance over voltage range of Module
- FSK Bit rates up to 300 kb/s
- Fully integrated synthesizer with a resolution of 61 Hz
- FSK, GFSK, MSK, GMSK and OOK modulations
- Built-in Bit Synchronizer performing Clock Recovery
- Incoming Sync W ord Recognition
- 115 dB+ Dynamic Range RSSI
- Automatic RF Sense with ultra-fast AFC
- Packet engine with CRC-16, AES-128, 66-byte FIFO Built-in temperature sensor
- ModuleSize:19.7X16mm

APPLICATIONS

- Automated Meter Reading
- W ireless Sensor Networks
- Hom e and Building Automation
- Wireless Alarm and Security Systems
- Industrial Monitoring and Control
- Wireless M-BUS

Table of Contentents

Page

1. General Description....8
1.1 Simplified Block Diagram....8
1.2 Pin Diagram....9
1.3 Pin Description....9
2. Electrical Characteristics....10
2.1 Absolute Maximum Ratings....10
2.2 Operating Range....10
2.3 ModuleSpecification....11
2.3.1. Power Consumption....11
2.3.2. Frequency Synthesis....11
2.3.3.Receiver....12
2.3.4. Transmitter....13
2.3.5. Digital Specification....14
3. ModuleDescription....15
3.1 Power Supply Strategy....15
3.2 Frequency Synthesis....15
3.2.1. Reference Oscillator....15
3.2.2. CLKOUT Output....16
3.2.3. PLL Architecture....16
3.2.4. Lock Time....17
3.2.5. Lock Detect Indicator....17
3.3. Transmitter Description....18
3.3.1. Architecture Description....18
3.3.2. Bit Rate Setting....18
3.3.3. FSK Modulation....19
3.3.4. OOK Modulation....19
3.3.5. Modulation Shaping....20
3.3.6. Power Amplifiers....20
3.3.7. High Power Settings....21
3.3.8. Output Power Summary....21
3.3.9 Over Current Protection....21
3.4 Receiver Description....22
3.4.1. LNA - Single to Differential Buffer....22
3.4.2 Automatic Gain Control....23
3.4.3. Continuous-Time DAGC....24
3.4.4. Quadrature Mixer - ADCs – Decimators....25
3.4.5. Channel Filter....25
3.4.6. DC Cancellation....26
3.4.7. Complex Filter - OOK....26
3.4.8. RSSI....27
3.4.9. Cordic....27
3.4.10. FSK Demodulator....28

3.4.11. OOK Demodulator 28
3.4.12. Bit Synchronizer 30
3.4.13. Frequency Error Indicator 30
3.4.14. Automatic Frequency Correction 32
3.4.15. Optimized Setup for Low Modulation Index Systems 32
3.4.16. Temperature Sensor 33
3.4.17. Timeout Function 33
4. Operating Modes 34
4.1. Basic Modes 34
4.2. Automatic Sequencer and Wake-Up Times 34
4.2.1. Transmitter Startup Time 35
4.2.2. Tx Start Procedure 35
4.2.3. Receiver Startup Time 35
4.2.4. Rx Start Procedure 37
4.2.5. Optimized Frequency Hopping Sequences 37
4.3 Listen Mode 37
4.3.1. Timings 38
4.3.2. Criteria 39
4.3.3. End of Cycle Actions 39
4.3.4. Stopping Listen Mode 40
4.3.5. RC Timer Accuracy 40
4.4. AutoModes 40
5. Data Processing 41
5.1. Overview 41
5.1.1. Block Diagram 41
5.1.2. Data Operation Modes 41
5.2. Control Block Description 42
5.2.1. SPI Interface 42
5.2.2. FIFO 43
5.2.3. Sync Word Recognition 45
5.2.4. Packet Handler 46
5.2.5. Control 46
5.3. Digital IO Pins Mapping 46
5.3.1. DIO Pins Mapping in Continuous Mode 46
5.3.2. DIO Pins Mapping in Packet Mode 46
5.4. Continuous Mode 47
5.4.1. General Description 47
5.4.2. Tx Processing 48
5.4.3. Rx Processing 48
5.5.1. General Description 49
5.5.2. Packet Format 49
5.5.3. Tx Processing (without AES) 52
5.5.4. Rx Processing (without AES) 52

5.5.5. AES 53
5.5.6. Handling Large Packets 54
5.5.7. Packet Filtering 54
5.5.8. DC-Free Data Mechanisms 56
6. Configuration and Status Registers 58
6.1. General Description 58
6.2. Common Configuration Registers 61
6.3. Transmitter Registers 64
6.4. Receiver Registers 65
6.5. IRQ and Pin Mapping Registers 67
6.6. Packet Engine Registers 69
6.7. Temperature Sensor Registers 72
6.8. Test Registers 72
7. Application Information 73
7.1. Crystal Resonator Specification 73
7.2. Reset of the Module 73
7.2.1. POR 73
7.2.2. Manual Reset 74
7.3. Reference Design 75
8. Packaging Information 77
8.1. Package Outline Drawing 77
8.2 Tray packaging 78
9. Recommended PCB Land Pattern 79
10. Ordering Information 80
11. Revision History 80
12. Contact us: 81

Index of Figures

Page

Figure 1. Block Diagram 8
Figure 2. Marking Diagram 9
Figure 3. TCXO Connection 15
Figure 4. Transmitter Block Diagram 18
Figure 5. Output Power Curves 21
Figure 6. Receiver Block Diagram 22
Figure 7. AGC Thresholds Settings 23
Figure 8. RSSI Dynamic Curve 27
Figure 9. Cordic Extraction 28
Figure 10. OOK Peak Demodulator Description 28
Figure 11. Floor Threshold Optimization 29
Figure 12. Bit Synchronizer Description 30
Figure 13. FEI Process 31

Figure 14. Optimized AFC (AfcLowBetaOn=1) 32
Figure 15. Temperature Sensor Response 33
Figure 16. Tx Startup, FSK and OOK 35
Figure 17. Rx Startup - No AGC, no AFC 36
Figure 18. Rx Startup - AGC, no AFC 36
Figure 19. Rx Startup - AGC and AFC 36
Figure 20. Listen Mode Sequence (no wanted signal is received) 38
Figure 21. Listen Mode Sequence (wanted signal is received) 40
Figure 22. Auto Modes of Packet Handler 40
Figure 23. LJ1269H Data Processing Conceptual View 41
Figure 24. SPI Timing Diagram (single access) 42
Figure 25. FIFO and Shift Register (SR) 43
Figure 26. FifoLevel IRQ Source Behavior 44
Figure 27. Sync Word Recognition 45
Figure 28. Continuous Mode Conceptual View 47
Figure 29. Tx Processing in Continuous Mode 48
Figure 30. Rx Processing in Continuous Mode 48
Figure 31. Packet Mode Conceptual View 49
Figure 32. Fixed Length Packet Format 50
Figure 33. Variable Length Packet Format 51
Figure 34. Unlimited Length Packet Format 51
Figure 35. CRC Implementation 56
Figure 36. Manchester Encoding/Decoding 57
Figure 37. Data Whitening 57
Figure 38. POR Timing Diagram 73
Figure 39. Manual Reset Timing Diagram 74
Figure 40. Typical Application Schematic 75
Figure 41. Package Outline Drawing 78

Index of Tables

Page

Table 1 LJ1269H Pinouts 9
Table 2 Absolute Maximum Ratings 10
Table 3 Operating Range 10
Table 4 Power Consumption Specification 11
Table 5 Frequency Synthesizer Specification 11
Table 6 Receiver Specification 12
Table 7 Transmitter Specification 13
Table 8 Digital Specification 14
Table 9 Bit Rate Examples 19
Table 10 Power Amplifier Mode Selection Truth Table 20

Table 11 High Power Settings 21
Table 12 LNA Gain Settings 22
Table 13 Receiver Performance Summary 24
Table 14 Available RxBw Settings 25
Table 15 Available DCC Cutoff Frequencies 26
Table 16 Basic Transceiver Modes 34
Table 17 Range of Durations in Listen Mode 38
Table 18 Signal Acceptance Criteria in Listen Mode 39
Table 19 End of Listen Cycle Actions 39
Table 20 Status of FIFO when Switching Between Different Modes of the Module 45
Table 21 DIO Mapping, Continuous Mode 46
Table 22 DIO Mapping, Packet Mode 47
Table 23 Registers Summary 58
Table 24 Common Configuration Registers 61
Table 25 Transmitter Registers 64
Table 26 Receiver Registers 65
Table 27 IRQ and Pin Mapping Registers 67
Table 28 Packet Engine Registers 69
Table 29 Temperature Sensor Registers 72
Table 30 Test Registers 72
Table 31 Crystal Specification 73
Table 32. BOM of Typical Application 76
Table 33 Revision History 80

Acronyms

BOM	Bill Of Materials
BR	Bit Rate
BW	Bandwidth
CCITT	Comité Consultatif International Téléphonique et Télégraphique – ITU
CRC	Cyclic Redundancy Check
DAC	Digital to Analog Converter
ETSI	European Telecommunications Standards Institute
FCC	Federal Communications Commission
Fdev	Frequency Deviation
FIFO	First In First Out
FIR	Finite Impulse Response
FS	Frequency Synthesizer
FSK	Frequency Shift Keying
GUI	Graphical User Interface
IC	Integrated Circ
ID	IDentificator
IF	Intermediate Frequency
IRQ	Interrupt ReQuest
ITU	International Telecommunication Union
LFSR	Linear Feedback Shift Register
LNA	Low Noise Amplifier
LO	Local Oscillator
LSB	Least Significant Bit
MSB	Most Significant Bit
NRZ	Non Return to Zero
OOK	On Off Keying
PA	Power Amplifier
PCB	Printed Circuit Board
PLL	Phase-Locked Loop
POR	Power On Reset
RBW	Resolution BandWidth
RF	Radio Frequency
RSSI	Received Signal Strength Indicator
Rx	Receiver
SAW	Surface Acoustic Wave
SPI	Serial Peripheral Interface
SR	Shift Register
Stby	Standby
Tx	Transmitter
uC	Microcontroller
VCO	Voltage Controlled Oscillator
XO	Crystal Oscillator
XOR	eXclusive OR

This product datasheet contains a detailed description of the LJ1269H performance and functionality

1. General Description

The LJ1269H is a transceiver Moduleideally suited for today's high performance ISM band RF applications. It is intended for use as high-performance, low-cost FSK and OOK RF transceiver for robust frequency agile, half-duplex bi- directional RF links, and where stable and constant RF performance is required over the full operating range of the device down to 1.8V.

The LJ1269H is intended for applications over a wide frequency range, including the 315MHz,433 MHz,868 MHz and 915MHz ISM bands. Coupled with a link budget in excess of 140 dB, the advanced system features of the LJ1269H include a 66 byte TX/RX FIFO, configurable automatic packet handler, listen mode, temperature sensor and configurable DIOs which greatly enhance system flexibility whilst at the same time significantly reducing MCU requirements.

The LJ1269H complies with both ETSI and FCC regulatory requirements and is available

1.1 Simplified Block Diagram

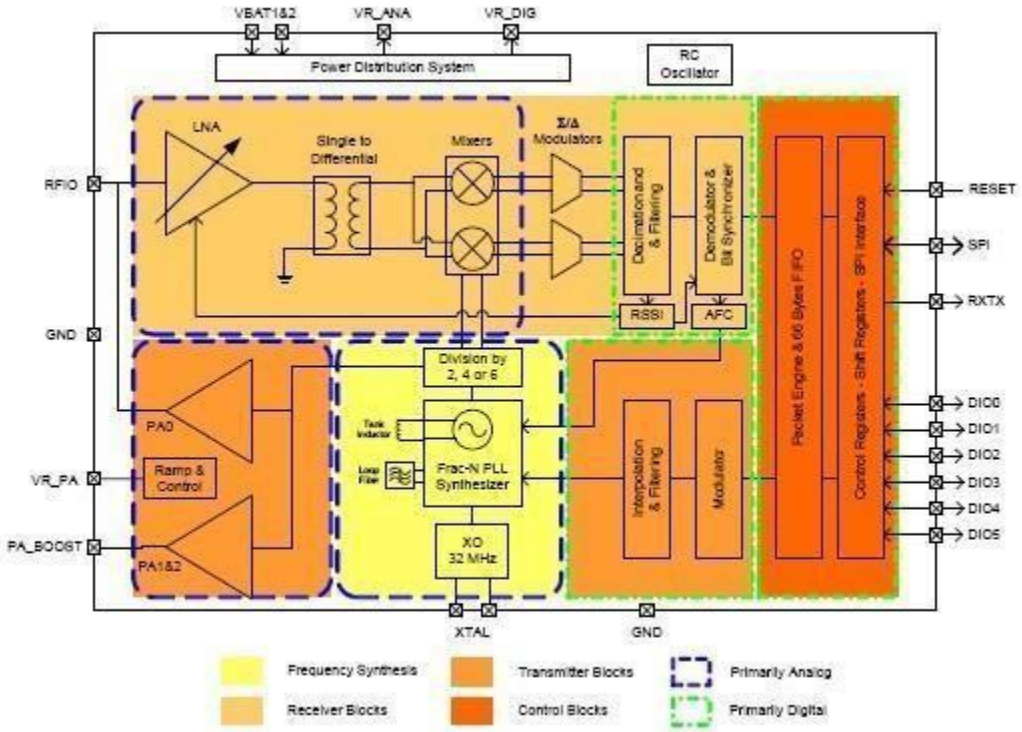

Figure 1. Block Diagram

1.2 Pin Diagram

The following diagram shows the pin arrangement of the top view.

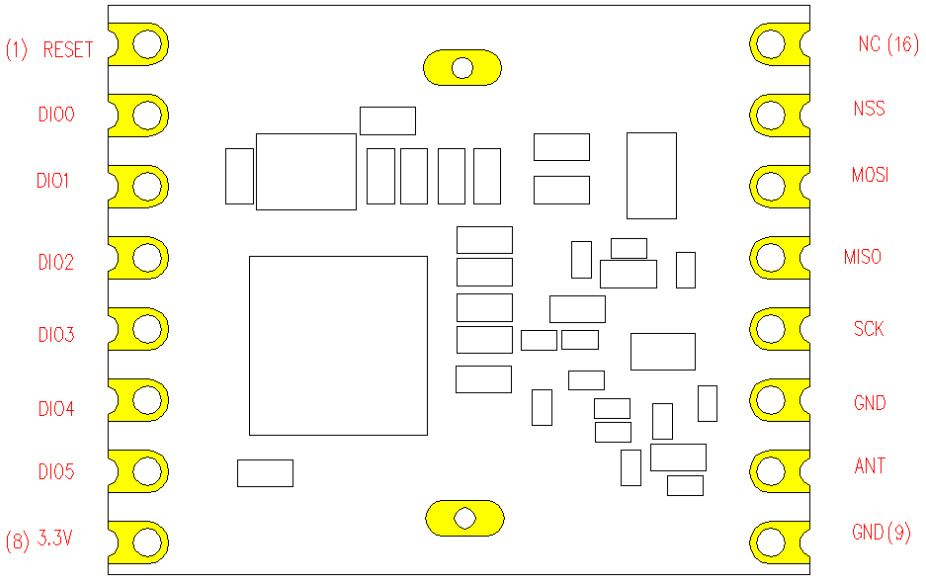

Figure 2. Marking Diagram

1.3 Pin Description

Table 1 LJ1269H Pinouts

Number	Name	Type	Description
1	RESET	I/O	Reset trigger input
2	DIO0	I/O	Digital I/O, software configured
3	DIO1	I/O	Digital I/O, software configured
4	DIO2	I/O	Digital I/O, software configured
5	DIO3	I/O	Digital I/O, software configured
6	DIO4	I/O	Digital I/O, software configured
7	DIO5	I/O	Digital I/O, software configured
8	3.3V	-	Supply voltage
9	GND	-	Ground
10	ANT		RF signal output/input.
11	GND	-	Ground
12	SCK	I	SPI Clock input
13	MISO	O	SPI Data output
14	MOSI	I	SPI Data input
15	NSS	I	SPI Chip select input
16	NC	-	Connect to GND

2. Electrical Characteristics

2.1 Absolute Maximum Ratings

Stresses above the values listed below may cause permanent device failure. Exposure to absolute maximum ratings for extended periods may affect device reliability.

Table 2 Absolute Maximum Ratings

Symbol	Description	Min	Max	Unit
VDDmr	Supply Voltage	-0.5	3.9	V
Tmr	Temperature	-55	+115	° C
Tj	Junction temperature	-	+125	° C
Pmr	RF Input Level	-	+6	dBm
DC_20dBm	Duty Cycle of transmission at +20dBm output	-	1	%
VSW R_20dBm	Maximum VSW R at antenna port	-	3:1	-

2.2 Operating Range

Table 3 Operating Range

Symbol	Description	Min	Max	Unit
VDDop	Supply voltage(1.8V-2.4V 17dBm, 2.4V- 3.6V 20dBm)	1.8	3.6	V
Top	Operational temperature range	-20	+70	°C
Clop	Load capacitance on digital ports	-	25	pF
ML	RF Input Level	-	0	dBm

2.3 ModuleSpecification

The tables below give the electrical specifications of the transceiver under the following conditions: Supply voltage VBAT1= VBAT2=VDD=3.3 V, temperature = 25 °C, F_{RF} = 915 MHz, Pout = +20dBm, 2-level FSK modulation without pre-filtering, FDA = 5 kHz, Bit Rate = 4.8 kb/s and terminated in a matched 50 Ohm impedance, unless otherwise specified.

Note Unless otherwise specified, the performances in the other frequency bands are similar or better.

2.3.1. Power Consumption

Table 4 Power Consumption Specification

Symbol	Description	Conditions	Min	Typ	Max	Unit
IDDSL	Supply current in Sleep mode		-	0.1		uA
IDDIDLE	Supply current in Idle mode	RC oscillator enabled	-	1.2	-	uA
IDDST	Supply current in Standby mode	Crystal oscillator enabled	-	1.25	1.5	mA
IDDFS	Supply current in Synthesizer mode		-	9	-	mA
IDDR	Supply current in Receive mode		-	16	-	mA
IDDT	Supply current in Transmit mode with appropriate matching, sta- ble across VDD range	RFOP = +20 dBm, on PA_BOOST RFOP = +17 dBm, on PA_BOOST RFOP = +13 dBm, on RFIO pin RFOP = +10 dBm, on RFIO pin RFOP = 0 dBm, on RFIO pin RFOP = -1 dBm, on RFIO pin	- - - - - -	130 95 45 33 20 16	- - - - - -	mA mA mA mA mA mA

2.3.2. Frequency Synthesis

Table 5 Frequency Synthesizer Specification

Symbol	Description	Conditions	Min	Typ	Max	Unit
FR	Synthesizer Frequency Range	315MHz Module 433MHz Module 868MHz Module 915MHz Module	290 424 862 890		340 510 890 1020	MHz MHz MHz MHz
FXOSC	Crystal oscillator frequency	For All Module	-	32	-	MHz
TS_OSC	Crystal oscillator frequency		-	250	500	us
TS_FS	Frequency synthesizer wake-up time to PllLock signal	From Standby mode	-	80	150	us
TS_HOP	Frequency synthesizer hop time at most 10 kHz away from the targe	200 kHz step 1 MHz step 5 MHz step 7 MHz step 12 MHz step 20 MHz step 25 MHz step	- - - - - - -	20 20 50 50 80 80 80	- - - - - - -	us us us us us us us

FSTEP	Frequency synthesizer step	FSTEP = FXOSC/2^{19}	-	61.0	-	Hz
FRC	RC Oscillator frequency	After calibration	-	62.5	-	kHz
BRF	Bit rate, FSK	Programmable	1.2	-	300	kbps
BRO	Bit rate, OOK	Programmable	1.2	-	32.768	kbps
FDA	Frequency deviation, FSK	Programmable FDA + BRF/2 =< 500 kHz	0.6	-	300	kHz

2.3.3.Receiver

All receiver tests are performed with *RxBw* = 10 kHz (Single Side Bandwidth) as programmed in *RegRxBw*, receiving a PN15 sequence with a BER of 0.1% (Bit Synchronizer is enabled), unless otherwise specified. The LNA impedance is set to 200 Ohms, by setting bit *LnaZin* in *RegLna* to 1. Blocking tests are performed with an unmodulated interferer. The wanted signal power for the Blocking Immunity, ACR, IIP2, IIP3 and AMR tests is set 3 dB above the nominal sensitivity level.

Table 6 Receiver Specification

Symbol	Description	Conditions	Min	Typ	Max	Unit
RFS_F	FSK sensitivity, highest LNA gain	FDA = 5 kHz, BR = 1.2 kb/s FDA = 5 kHz, BR = 4.8 kb/s FDA = 5 kHz, BR = 4.8 kb/s	- - -	-118 -114 -105	- - -	dBm dBm dBm
		FDA = 5 kHz, BR = 1.2 kb/s *	-	-120	-	dBm
RFS_O	OOK sensitivity, highest LNA gain	BR = 4.8 kb/s	-	-112	-109	dBm
CCR	Co-Channel Rejection		-13	-10	-	dB
ACR	Adjacent Channel Rejection	Offset = +/- 25 kHz Offset = +/- 50 kHz	- 37	42 42	- -	dB dB
BI	Blocking Immunity	Offset = +/- 1 MHz Offset = +/- 2 MHz Offset = +/- 10 MHz	- - -	66 71 79	- - -	dB dB dB
	Blocking Immunity Wanted signal at sensitivity +16dB	Offset = +/- 1 MHz Offset = +/- 2 MHz Offset = +/- 10 MHz	- - -	62 65 73	- - -	dB dB dB
AMR	AM Rejection , AM modulated interferer with 100% modulation depth, fm = 1 kHz, square	Offset = +/- 1 MHz Offset = +/- 2 MHz Offset = +/- 10 MHz	- - -	66 71 79	- - -	dB dB dB
IIP2	2nd order Input Intercept Point Unwanted tones are 20 MHz above the LO	Lowest LNA gain Highest LNA gain	- -	+75 +35	- -	dBm dBm

IIP3	3rd order Input Intercept point Unwanted tones are 1MHz and 1.995 MHz above the LO	Lowest LNA gain Highest LNA gain	- -23	+20 -18	- -	dBm dBm
BW _SSB	Single Side channel filter BW	Programmable	2.6	-	500	kHz
IMR_OOK	Image rejection in OOK mode	Wanted signal level = -106 dBm	27	30	-	dB
TS_RE	Receiver wake-up time, from PLL locked state to RxReady	RxBw = 10 kHz, BR = 4.8 kb/s RxBw = 200 kHz, BR = 100 kb/s	- -	1.7 96	- -	ms us
TS_RE_AGC	Receiver wake-up time, from PLL locked state, AGC enabled	RxBw = 10 kHz, BR = 4.8 kb/s RxBw = 200 kHz, BR = 100 kb/s	-	3.0 163		ms us
TS_RE_AGC &AFC	Receiver wake-up time, from PLL lock state, AGC and AFC enabled	RxBw = 10 kHz, BR = 4.8 kb/s RxBw = 200 kHz, BR = 100 kb/s		4.8 265		ms us
TS_FEI	FEI sampling time	Receiver is ready	-	4.Tbit	-	-
TS_AFC	AFC Response Time	Receiver is ready	-	4.Tbit	-	-
TS_RSSI	RSSI Response Time	Receiver is ready	-	2.Tbit	-	-
DR_RSSI	RSSI Dynamic Range	AGC enabled Min Max	- -	-115 0	- -	dBm dBm

Set SensitivityBoost in RegTestLna to 0x2D to reduce the noise floor in the receiver

2.3.4. Transmitter

Table 7 Transmitter Specification

Symbol	Description	Conditions	Min	Typ	Max	Unit
RF_OP	RF output power in 50 ohms On RFIO pin	Programmable with 1dB steps	- -	+20 -18	- -	dBm dBm
RF_OPH	Max RF output power, on PA_BOOST pin	With external match to 50 ohms	-	+20	-	dBm
ΔRF_OP	RF output power stability	From VDD=2.4V to 3.6V	-	+/-0.3	-	dB
PHN	Transmitter Phase Noise	50 kHz Offset from carrier 868 / 915 MHz bands 434 / 315 MHz bands	- -	-95 -99	- -	dBc/ Hz
ACP	Transmitter adjacent channel power (measured at 25 kHz off- set)	BT=0.5 . Measurement conditions as defined by EN 300 220-1 V2.1.1	-	-	-37	dBm
TS_TR	Transmitter wake up time, to the first rising edge of DCLK	Frequency Synthesizer enabled, PaRamp = 10 us, BR = 4.8 kb/s.	-	120	-	us

2.3.5. Digital Specification

Conditions: Temp = 25°C, VDD = 3.3V, unless otherwise specified.

Table 8 Digital Specification

Symbol	Description	Conditions	Min	Typ	Max	Unit
VIH	Digital input level high		0.8	-	-	VDD
VIL	Digital input level low		-	-	0.2	VDD
VOH	Digital output level high	Imax = 1 mA	0.9	-	-	VDD
VOL	Digital output level low	Imax = -1 mA	-	-	0.1	VDD
FSCK	SCK frequency		-	-	10	MHz
tch	SCK high time		50	-	-	ns
tcl	SCK low time		50	-	-	ns
trise	SCK rise time		-	5	-	ns
tfall	SCK fall time		-	5	-	ns
tsetup	MOSI setup time	from MOSI change to SCK rising edge	30	-	-	ns
thold	MOSI hold time	from SCK rising edge to MOSI change	60	-	-	ns
tnsetup	NSS setup time	from NSS falling edge to SCK rising edge	30	-	-	ns
tnhold	NSS hold time	from SCK falling edge to NSS rising edge, normal mode	30	-	-	ns
tnhigh	NSS high time between SPI accesses		20	-	-	ns
T_DATA	DATA hold and setup time		250	-	-	ns

3. ModuleDescription

This section describes in depth the architecture of the LJ1269H low-power, highly integrated transceiver.

3.1 Power Supply Strategy

The LJ1269H employs an advanced power supply scheme, which provides stable operating characteristics over the full temperature and voltage range of operation. This includes the full output power of +20dBm maintained from 2.4 to 3.6V. The LJ1269H can be powered from any low-noise voltage source via pins VBAT1 and VBAT2. Decoupling capacitors should be connected, as suggested in the reference design, on VR_PA, VR_DIG and VR_ANA pins to ensure a correct operation of the built-in voltage regulators.

3.2 Frequency Synthesis

The LO generation on the LJ1269H is based on a state-of-the-art fractional-N PLL. The PLL is fully integrated with automatic calibration.

3.2.1. Reference Oscillator

The crystal oscillator is the main timing reference of the LJ1269H . It is used as a reference for the frequency synthesizer and as a clock for the digital processing.
The XO startup time, TS_OSC, depends on the actual XTAL being connected on pins XTA and XTB. W hen using the built- in sequencer, the LJ1269H optimizes the startup time and automatically triggers the PLL when the XO signal is stable. To manually control the startup time, the user should either wait for TS_OSC max, or monitor the signal CLKOUT which will only be made available on the output buffer when a stable XO oscillation is achieved.

An external clock can be used to replace the crystal oscillator, for instance a tight tolerance TCXO. To do so, bit 4 at address 0x59 should be set to 1, and the external clock has to be provided on XTA. XTB should be left open. The peak- peak amplitude of the input signal must never exceed 2.4 V. Please consult your TCXO supplier for an appropriate value of decoupling capacitor, CD.

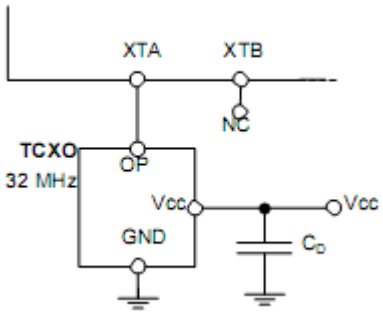

Figure 3. TCXO Connection

3.2.2. CLKOUT Output

The reference frequency, or a fraction of it, can be provided on DIO5 by modifying bits *ClkOut* in *RegDioMapping2*. Two typical applications of the CLKOUT output include:
To provide a clock output for a companion processor, thus saving the cost of an additional oscillator. CLKOUT can be made available in any operation mode except Sleep mode and is automatically enabled at power on reset. ‹ To provide an oscillator reference output. Measurement of the CLKOUT signal enables simple software trimming of the initial crystal tolerance.

Note to minimize the current consumption of the LJ1269H, please ensure that the CLKOUT signal is disabled when not required.

3.2.3. PLL Architecture

The frequency synthesizer generating the LO frequency for both the receiver and the transmitter is a fractional-N sigma- delta PLL. The PLL incorporates a third order loop capable of fast auto-calibration, and it has a fast switching-time. The VCO and the loop filter are both fully integrated, removing the need for an external tight-tolerance, high-Q inductor in the VCO tank circuit.

VCO
The VCO runs at 2, 4 or 6 times the RF frequency (respectively in the 915, 434 and 315 MHz bands) to reduce any LO leakage in receiver mode, to improve the quadrature precision of the receiver, and to reduce the pulling effects on the VCO during transmission.
The VCO calibration is fully automated. A coarse adjustment is carried out at power on reset, and a fine tuning is performed each time the LJ1269H PLL is activated. Automatic calibration times are fully transparent to the end-user, as their processing time is included in the *TS_TE* and *TS_RE* specifications.

PLL Bandwidth
The bandwidth of the LJ1269H Fractional-N PLL is wide enough to allow for:
High speed FSK modulation, up to 300 kb/s, inside the PLL bandwidth ‹ Very fast PLL lock times, enabling both short startup and fast hop times required for frequency agile applications

Carrier Frequency and Resolution
The LJ1269H PLL embeds a 19-bit sigma-delta modulator and its frequency resolution, constant over the whole frequency range, and is given by:

$$F_{STEP}=\frac{F_{XOSC}}{2^{19}}$$

The carrier frequency is programmed through *RegFrf*, split across addresses 0x07 to 0x09:

$$F_{RF} = F_{STEP} \times Frf(23,0)$$

Note The Frf setting is split across 3 bytes. A change in the center frequency will only be taken into account when the least significant byte FrfLsb in RegFrfLsb is written. This allows for more complex modulation schemes such as m- ary FSK, where frequency modulation is achieved by changing the programmed RF frequency.

3.2.4. Lock Time

PLL lock time *TS_FS* is a function of a number of technical factors, such as synthesized frequency, frequency step, etc. W hen using the built-in sequencer, the LJ1269H optimizes the startup time and automatically starts the receiver or the transmitter when the PLL has locked. To manually control the startup time, the user should either wait for *TS_FS* max given in the specification, or monitor the signal PLL lock detect indicator, which is set when the PLL has is within its locking range.

When performing an AFC, which usually corrects very small frequency errors, the PLL response time is approximately:

$$T_{PLLAFC}=\frac{5}{PLLBW}$$

In a frequency hopping scheme, the timings *TS_HOP* given in the table of specifications give an order of magnitude for the expected lock times.

3.2.5. Lock Detect Indicator

A lock indication signal can be made available on some of the DIO pins, and is toggled high when the PLL reaches its locking range. Please refer to Table 21 and Table 22 to map this interrupt to the desired pins.

Note *The lock detect block may indicate an unlock condition (signal toggling low) when the transmitter is FSK modulated with large frequency deviation settings.*

3.3. Transmitter Description

The transmitter of LJ1269H comprises the frequency synthesizer, modulator and power amplifier blocks.

3.3.1. Architecture Description

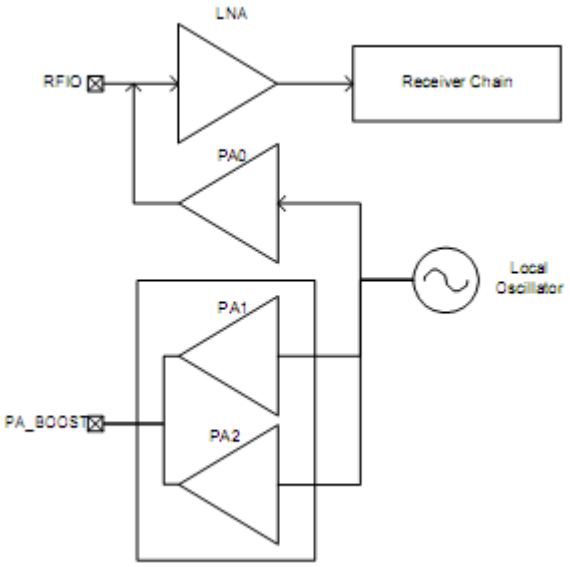

Figure 4. Transmitter Block Diagram

3.3.2. Bit Rate Setting

When using the LJ1269H in Continuous mode, the data stream to be transmitted can be input directly to the modulator via pin DIO2/DATA in an asynchronous manner, unless Gaussian filtering is used, in which case the DCLK signal on pin DIO1/DCLK is used to synchronize the data stream. See section 3.3.5 for details on the Gaussian filter.

In Packet mode or in Continuous mode with Gaussian filtering enabled (refer to section 5.5 for details), the Bit Rate (BR) is controlled by bits *BitRate* in *RegBitrate*:

$$BR=\frac{F_{XOSC}}{BitRate}$$

Amongst others, the following Bit Rates are accessible:

Table 9 Bit Rate Examples

Type	BitRate (15:8)	BitRate (7:0)	(G)FSK (G)MSK	OOK	Actual BR (b/s)
Classical modem baud rates(multiples of 1.2 kbps)	0x68	0x2B	1.2 kbps	1.2 kbps	1200.015
	0x34	0x15	2.4 kbps	2.4 kbps	2400.060
	0x1A	0x0B	4.8 kbps	4.8 kbps	4799.760
	0x0D	0x05	9.6 kbps	9.6 kbps	9600.960
	0x06	0x83	19.2 kbps	19.2 kbps	19196.16
	0x03	0x41	38.4 kbps		38415.36
	0x01	0xA1	76.8 kbps		76738.60
	0x00	0xD0	153.6 kbps		153846.1
Classical modem baud rates (multiples of 0.9 kbps)	0x02	0x2C	57.6 kbps		57553.95
	0x01	0x16	115.2 kbps		115107.9
Round bit rates(multiples of 12.5, 25 and 50 kbps)	0x0A	0x00	12.5 kbps	12.5 kbps	12500.00
	0x05	0x00	25 kbps	25 kbps	25000.00
	0x02	0x80	50 kbps		50000.00
	0x01	0x40	100 kbps		100000.0
	0x00	0xD5	150 kbps		150234.7
	0x00	0xA0	200 kbps		200000.0
	0x00	0x80	250 kbps		250000.0
	0x00	0x6B	300 kbps		299065.4
Watch Xtal frequency	0x03	0xD1	32.768 kbps	32.768 kbps	32753.32

3.3.3. FSK Modulation

FSK modulation is performed inside the PLL bandwidth, by changing the fractional divider ratio in the feedback loop of the PLL. The large resolution of the sigma-delta modulator, allows for very narrow frequency deviation. The frequency deviation FDEV is given by:

$$F_{DEV}=F_{STEP}\times Fdev\ (13,\ 0)$$

TO ensure a proper modulation,the following limit applies:

$$F_{DEV}-\frac{BR}{2}\leq 500KH_Z$$

Note no constraint applies to the modulation index of the transmitter, but the frequency deviation must exceed 600 Hz.

3.3.4. OOK Modulation

OOK modulation is applied by switching on and off the Power Amplifier. Digital control and smoothing are available to improve the transient power response of the OOK transmitter.

3.3.5. Modulation Shaping

Modulation shaping can be applied in both OOK and FSK modulation modes, to improve the narrowband response of the transmitter. Both shaping features are controlled with *PaRamp* bits in *RegPaRamp*.
In FSK mode, a Gaussian filter with BT = 0.3, 0.5 or 1 is used to filter the modulation stream, at the input of the sigma-delta modulator. If the Gaussian filter is enabled when the LJ1269H is in Continuous mode, DCLK signal on pin DIO1/DCLK will trigger an interrupt on the uC each time a new bit has to be transmitted. Please refer to section 5.4.2 for details.
When OOK modulation is used, the PA bias voltages are ramped up and down smoothly when the PA is turned on and off, to reduce spectral splatter.

Note the transmitter must be restarted if the PaRamp setting is changed, in order to recalibrate the built-in filter.

3.3.6. Power Amplifiers

A higher power mode, when PA1 and PA2 are combined, providing up to +20 dBm to a matched load.

W hen PA1 and PA2 are combined to deliver +20 dBm to the antenna, a specific impedance matching / harmonic filtering design is required to ensure impedance transformation and regulatory compliance.

All PA settings are controlled by *RegPaLevel*, and the truth table of settings is given in Table 10.

Table 10 Power Amplifier Mode Selection Truth Table

Pa0On	Pa1On	Pa2On	Mode	Power Range	Pout Formula
1	0	0	PA0 output on pin RFIO	-18 to +13 dBm	-18 dBm + OutputPower
0	1	0	PA1 enabled on pin PA_BOOST	-2 to +13 dBm	-18 dBm + OutputPower
0	1	1	PA1 and PA2 combined on pin PA_BOOST	+2 to +17 dBm	-14 dBm + OutputPower
0	1	1	PA1+PA2 on PA_BOOST with high output power +20dBm settings (see 3.3.7)	+5 to +20 dBm	-11 dBm + OutputPower
Other combinations			Reserved		

Notes To ensure correct operation at the highest power levels, please make sure to adjust the Over Current Protection Limit accordingly inRegOcp, except above +18dBm where it must be disabled
If PA_BOOST pin is not used (+20dBm applications and less), the pin can be left floating.

3.3.7. High Power Settings

The LJ1269H has a high power +20 dBm capability on PA_BOOST pin, with the following settings:

Table 11 High Power Settings

Register	Address	Value for High Power	Value for Rx or PA0 use	Description
RegOcp	0x13	0x0F	0x1x	OCP control
RegTestPa1	0x5A	0x5D	0x55	High power PA control
RegTestPa2	0x5C	0x7C	0x70	High power PA control

Note High Power settings MUST be turned off when using PA0, and in Receive mode

The Duty Cycle of transmission at +20dBm is limited to 1%, with a maximum VSW R of 3:1 at antenna port, over the standard operating range [-40;+85°C].

The software power is set to -3dBm.

3.3.8. Output Power Summary

The curves below summarize the possible PA options on the LJ1269H :

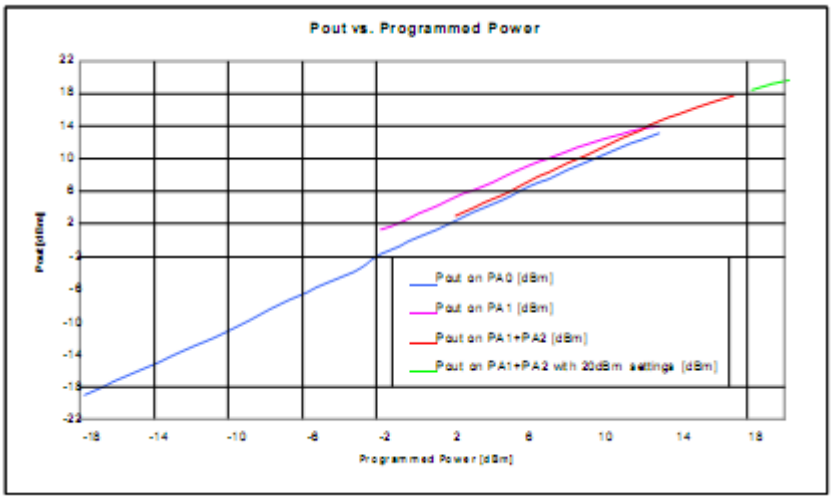

Figure 5. Output Power Curves

3.3.9 Over Current Protection

An over current protection block is built-in the module. It helps preventing surge currents required when the transmitter is used at its highest power levels, thus protecting the battery that may power the application. The current clamping value is controlled by *OcpTrim* bits in *RegOcp*, and is calculated with the following formula:

$$Imax = 45+5 \times OcpTrim \ mA$$

Note Imax sets a limit on the current drain of the Power Amplifier only, hence the maximum current drain of the LJ1269H is equal to Imax + IFS

3.4 Receiver Description

The LJ1269H features a digital receiver with the analog to digital conversion process being performed directly following the LNA-Mixers block. The zero-IF receiver is able to handle (G)FSK and (G)MSK modulation. ASK and OOK modulation is, however, demodulated by a low-IF architecture. All the filtering, demodulation, gain control, synchronization and packet handling is performed digitally, which allows a very wide range of bit rates and frequency deviations to be selected. The receiver is also capable of automatic gain calibration in order to improve precision on RSSI measurements.

Block Diagram

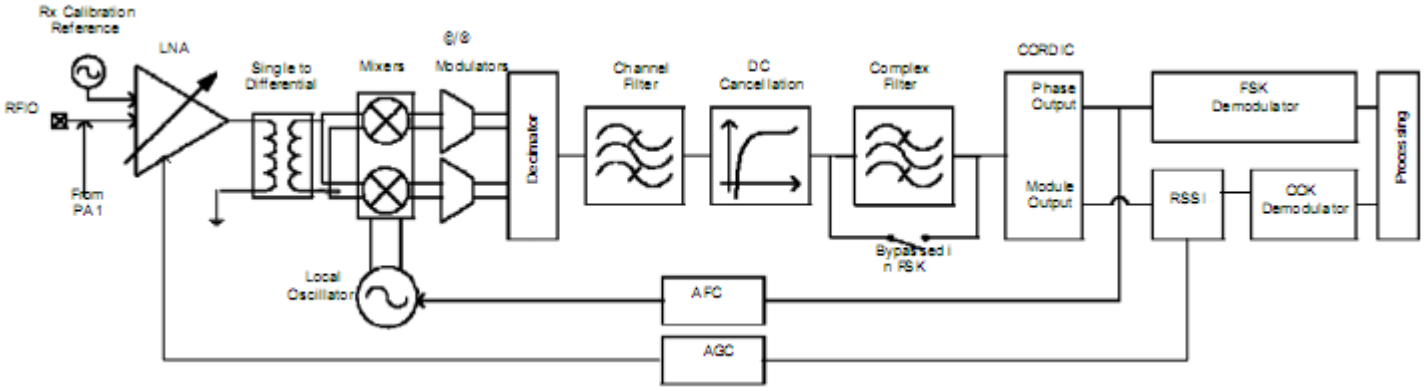

Figure 6. Receiver Block Diagram

The following sections give a brief description of each of the receiver blocks.

3.4.1. LNA - Single to Differential Buffer

The LNA uses a common-gate topology, which allows for a flat characteristic over the whole frequency range. It is designed to have an input impedance of 50 Ohms or 200 Ohms (as selected with bit *LnaZin* in *RegLna)*, and the parasitic capacitance at the LNA input port is cancelled with the external RF choke. A single to differential buffer is implemented to improve the second order linearity of the receiver.

The LNA gain, including the single-to-differential buffer, is programmable over a 48 dB dynamic range, and control is either manual or automatic with the embedded AGC function.

Note In the specific case where the LNA gain is manually set by the user, the receiver will not be able to properly handle FSK signals with a modulation index smaller than 2 at an input power greater than the 1dB compression point, tabulated in section

Table 12 LNA Gain Settings

LnaGainSelect	LNA Gain	Gain Setting
000	Any of the below, set by the AGC loop	-
001	Max gain	G1
010	Max gain - 6 dB	G2
011	Max gain - 12 dB	G3
100	Max gain - 24 dB	G4
101	Max gain - 36 dB	G5
110	Max gain - 48 dB	G6
111	Reserved	-

3.4.2 Automatic Gain Control

By default (*LnaGainSelect = 000*), the LNA gain is controlled by a digital AGC loop in order to obtain the optimal sensitivity/ linearity trade-off.

Regardless of the data transfer mode (Packet or Continuous), the following series of events takes place when the receiver is enabled:

- The receiver stays in WAIT mode, until *RssiValue* exceeds *RssiThreshold* for two consecutive samples. Its power consumption is the receiver power consumption.
- When this condition is satisfied, the receiver automatically selects the most suitable LNA gain, optimizing the sensitivity/linearity trade-off.
- The programmed LNA gain, read-accessible with *LnaCurrentGain* in *RegLna*, is carried on for the whole duration of the packet, until one of the following conditions is fulfilled:
- Packet mode: if *AutoRxRestartOn = 0,* the LNA gain will remain the same for the reception of the following packet. If *AutoRxRestartOn = 1*, after the controller has emptied the FIFO the receiver will re-enter the WAIT mode described above, after a delay of *InterPacketRxDelay*, allowing for the distant transmitter to ramp down, hence avoiding a false RSSI detection. In both cases (AutoRxRestartOn=0 or AutoRxRestartOn=1), the receiver can also re-enter the W AIT mode by setting *RestartRx* bit to 1. The user can decide to do so, to manually launch a new AGC procedure.
- Continuous mode: upon reception of valid data, the user can decide to either leave the receiver enabled with the same LNA gain, or to restart the procedure, by setting *RestartRx* bit to 1, resuming the WAIT mode of the receiver, described above.

Notes - the AGC procedure must be performed while receiving preamble in FSK mode

- in OOK mode, the AGC will give better results if performed while receiving a constant "1" sequence

The following figure illustrates the AGC behavior:

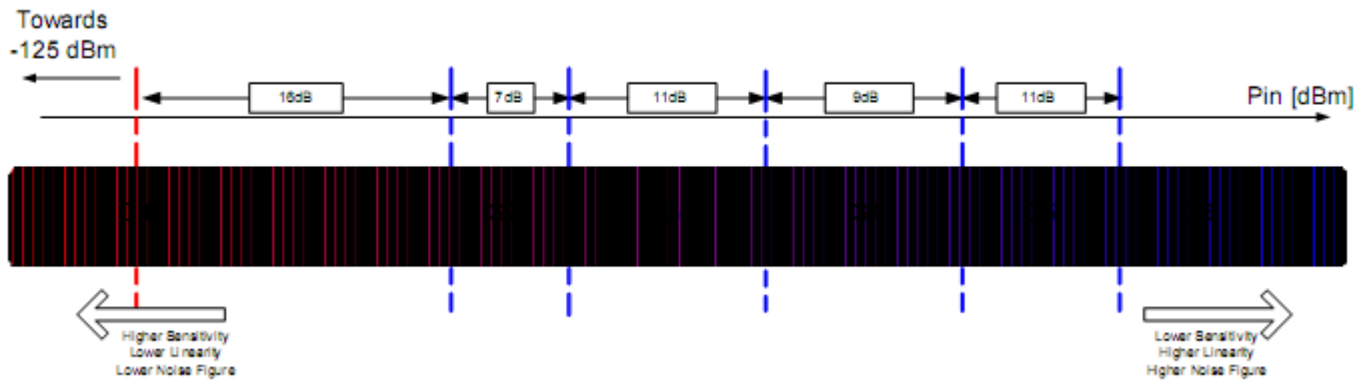

Figure 7. AGC Thresholds Settings

The following table summarizes the performance (typical figures) of the complete receiver:

Table 13 Receiver Performance Summary

Input Power Pin	Gain Setting	Receiver Performance (typ)			
		P_{-1dB} [dBm]	NF [dB]	IIP3 [dBm]	IIP2 [dBm]
Pin < AgcThresh1	G1	-37	7	-18	+35
AgcThresh1 < Pin < AgcThresh2	G2	-31	13	-15	+40
AgcThresh2 < Pin < AgcThresh3	G3	-26	18	-8	+48
AgcThresh4 < Pin < AgcThresh5	G4	-14	27	-1	+62
AgcThresh5 < Pin	G5	>-6	36	+13	+68
AgcThresh5 < Pin	G6	>0	44	+20	+75

RssiThreshold Setting

For correct operation of the AGC, *RssiThreshold* in *RegRssiThresh* must be set to the sensitivity of the receiver. The receiver will remain in WAIT mode until *RssiThreshold* is exceeded.

Note When AFC is enabled and performed automatically at the receiver startup, the channel filter used by the receiver during the AFC and the AGC is RxBwAfc instead of the standard RxBw setting. This may impact the sensitivity of the receiver, and the setting of RssiThreshold accordingly

AGC Reference

The AGC reference level is automatically computed in the LJ1269H , according to:

*AGC Reference [dBm] = -174 + NF + DemodSnr +10.log(2*RxBw) + FadingMargin [dBm]*

With:

- *NF* = 7dB : LNA"s Noise Figure at maximum gain
- *DemodSnr* = 8 dB : SNR needed by the demodulator
- *RxBw* : Single sideband channel filter bandwidth
- *FadingMargin = 5 dB* : Fading margin

3.4.3. Continuous-Time DAGC

In addition to the automatic gain control described in section 3.4.3, the LJ1269H is capable of continuously adjusting its gain in the digital domain, after the analog to digital conversion has occured. This feature, named DAGC, is fully transparent to the end user. The digital gain adjustment is repeated every 2 bits, and has the following benefits:

- Fully *transparent* to the end user
- *Improves* the fading margin of the receiver during the reception of a packet, even if the gain of the LNA is frozen
- *Improves* the receiver robustness in fast fading signal conditions, by quickly adjusting the receiver gain (every 2 bits)
- W orks in Continuous, Packet, and unlimited length Packet modes

The DAGC is enabled by setting *RegTestDagc* to 0x20 for low modulation index systems (i.e. when *AfcLowBetaOn*=1, refer to section 3.4.16), and 0x30 for other systems. It is recommended to always enable the DAGC.

3.4.4. Quadrature Mixer - ADCs – Decimators

The mixer is inserted between output of the RF buffer stage and the input of the analog to digital converter (ADC) of the receiver section. This block is designed to translate the spectrum of the input RF signal to base-band, and offer both high IIP2 and IIP3 responses.
In the lower bands of operation (290 to 510 MHz), the multi-phase mixing architecture with weighted phases improves the rejection of the LO harmonics in receiver mode, hence increasing the receiver immunity to out-of-band interferers.
The I and Q digitalization is made by two 5th order continuous-time Sigma-Delta Analog to Digital Converters (ADC). Their gain is not constant over temperature, but the whole receiver is calibrated before reception, so that this inaccuracy has no impact on the RSSI precision. The ADC output is one bit per channel. It needs to be decimated and filtered afterwards. This ADC can also be used for temperature measurement, please refer to section 3.4.17 for more details.
The decimators decrease the sample rate of the incoming signal in order to optimize the area and power consumption of the following receiver blocks.

3.4.5. Channel Filter

The role of the channel filter is to filter out the noise and interferers outside of the channel. Channel filtering on the LJ1269H is implemented with a 16-tap Finite Impulse Response (FIR) filter, providing an outstanding Adjacent Channel Rejection performance, even for narrowband applications.
Note to respect oversampling rules in the decimation chain of the receiver, the Bit Rate cannot be set at a higher value than 2 times the single-side receiver bandwidth (BitRate < 2 x RxBw)
The single-side channel filter bandwidth *RxBw* is controlled by the parameters *RxBwMant* and *RxBwExp* in *RegRxBw:*

- W hen FSK modulation is enabled:

$$R_X B_W = \frac{FXOSC}{R_X B_W M_{ant} \times 2^{R_X B_W E_{XP}} + 2}$$

- W hen OOK modulation is enabled:

$$R_X B_W = \frac{FXOSC}{R_X B_W M_{ant} \times 2^{R_X B_W E_{XP}} + 3}$$

The following channel filter bandwidths are accessible (oscillator is mandated at 32 MHz):

Table 14 Available RxBw Settings

RxBwMant (binary/value)	RxBwExp (decimal)	RXBW(kHZ)	
		FSK ModulationType=00	Ook ModulationType=01
10b / 24	7	2.6	1.3
01b / 20	7	3.1	1.6
00b / 16	7	3.9	2.0
10b / 24	6	5.2	2.6
01b / 20	6	6.3	3.1
00b / 16	6	7.8	3.9
10b / 24	5	10.4	5.2
01b / 20	5	12.5	6.3
00b / 16	5	15.6	7.8
10b / 24	4	20.8	10.4

01b / 20	4	25.0	12.5
00b / 16	4	31.3	15.6
10b / 24	3	41.7	20.8
01b / 20	3	50.0	25.0
00b / 16	3	62.5	31.3
10b / 24	2	83.3	41.7
01b / 20	2	100.0	50.0
00b / 16	2	125.0	62.5
10b / 24	1	166.7	83.3
01b / 20	1	200.0	100.0
00b / 16	1	250.0	125.0
10b / 24	0	333.3	166.7
01b / 20	0	400.0	200.0
00b / 16	0	500.0	250.0

3.4.6. DC Cancellation

DC cancellation is required in zero-IF architecture transceivers to remove any DC offset generated through self-reception. It is built-in the LJ1269H and its adjustable cutoff frequency *fc* is controlled in *RegRxBw*:

Table 15 Available DCC Cutoff Frequencies

DccFreq in RegRxBw	fc in % of RxBw
000	16
001	8
010(default)	4
011	2
100	1
101	0.5
110	0.25
111	0.125

The default value of *DccFreq* cutoff frequency is typically 4% of the RxBw (channel filter BW). The cutoff frequency of the DCC can however be increased to slightly improve the sensitivity, under wider modulation conditions. It is advised to adjust the DCC setting while monitoring the receiver sensitivity.

3.4.7. Complex Filter - OOK

In OOK mode the LJ1269H is modified to a low-IF architecture. The IF frequency is automatically set to half the single side bandwidth of the channel filter (F_{IF} = 0.5 x *RxBw*). The Local Oscillator is automatically offset by the IF in the OOK receiver. A complex filter is implemented on the Moduleto attenuate the resulting image frequency by typically 30 dB.

Note： this filter is automatically bypassed when receiving FSK signals (ModulationType = 00 in *RegDataModul).*

3.4.8. RSSI

The RSSI block evaluates the amount of energy available within the receiver channel bandwidth. Its resolution is 0.5 dB, and it has a wide dynamic range to accommodate both small and large signal levels that may be present. Its acquisition time is very short, taking only 2 bit periods. The RSSI sampling must occur during the reception of preamble in FSK, and constant “1” reception in OOK.

Note - RssiValue can only be read when it exceeds RssiThreshold

- The receiver is capable of automatic gain calibration, in order to improve the precision of its RSSI measurements. This function injects a known RF signal at the LNA input, and calibrates the receiver gain accordingly. This calibration is automatically performed during the PLL start-up, making it a transparent process to the end-user

- RSSI accuracy depends on all components located between the antenna port and pin RFIO, and is therefore limited to a few dB. Board-level calibration is advised to further improve accuracy

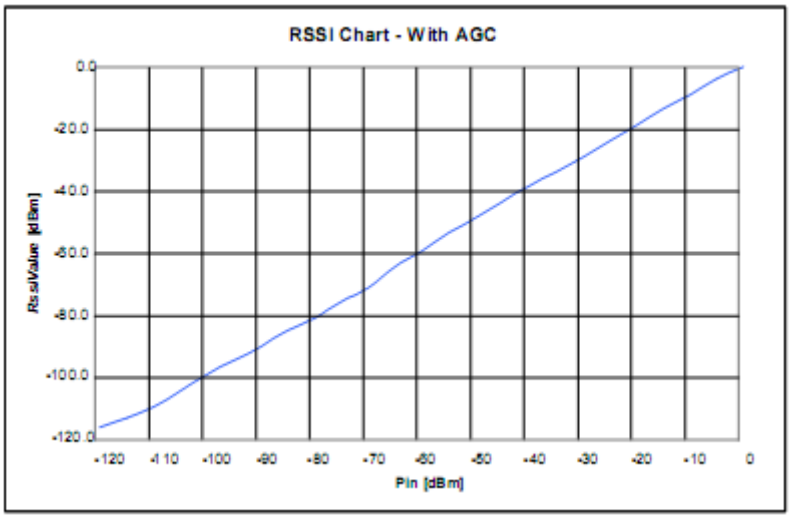

Figure 8. RSSI Dynamic Curve

3.4.9. Cordic

The Cordic task is to extract the phase and the amplitude of the modulation vector (I+j.Q). This information, still in the digital domain is used:

- Phase output: used by the FSK demodulator and the AFC blocks.
- Amplitude output: used by the RSSI block, for FSK demodulation, AGC and automatic gain calibration purposes.

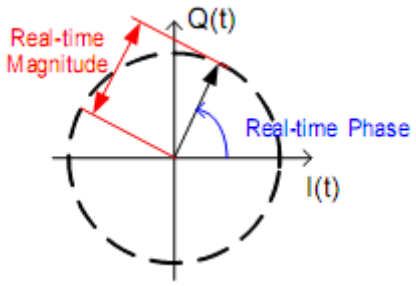

Figure 9. Cordic Extraction

3.4.10. FSK Demodulator

The FSK demodulator of the LJ1269H is designed to demodulate FSK, GFSK, MSK and GMSK modulated signals. It is most efficient when the modulation index of the signal is greater than 0.5 and below 10:

$$0.5 \leq \beta = \frac{2 \times F_{DEV}}{BR} \leq 10$$

The output of the FSK demodulator can be fed to the Bit Synchronizer (described in section 3.4.13), to provide the companion processor with a synchronous data stream in Continuous mode.

3.4.11. OOK Demodulator

The OOK demodulator performs a comparison of the RSSI output and a threshold value. Three different threshold modes are available, configured through bits *OokThreshType* in *RegOokPeak*.
The recommended mode of operation is the "Peak" threshold mode, illustrated in Figure 11:

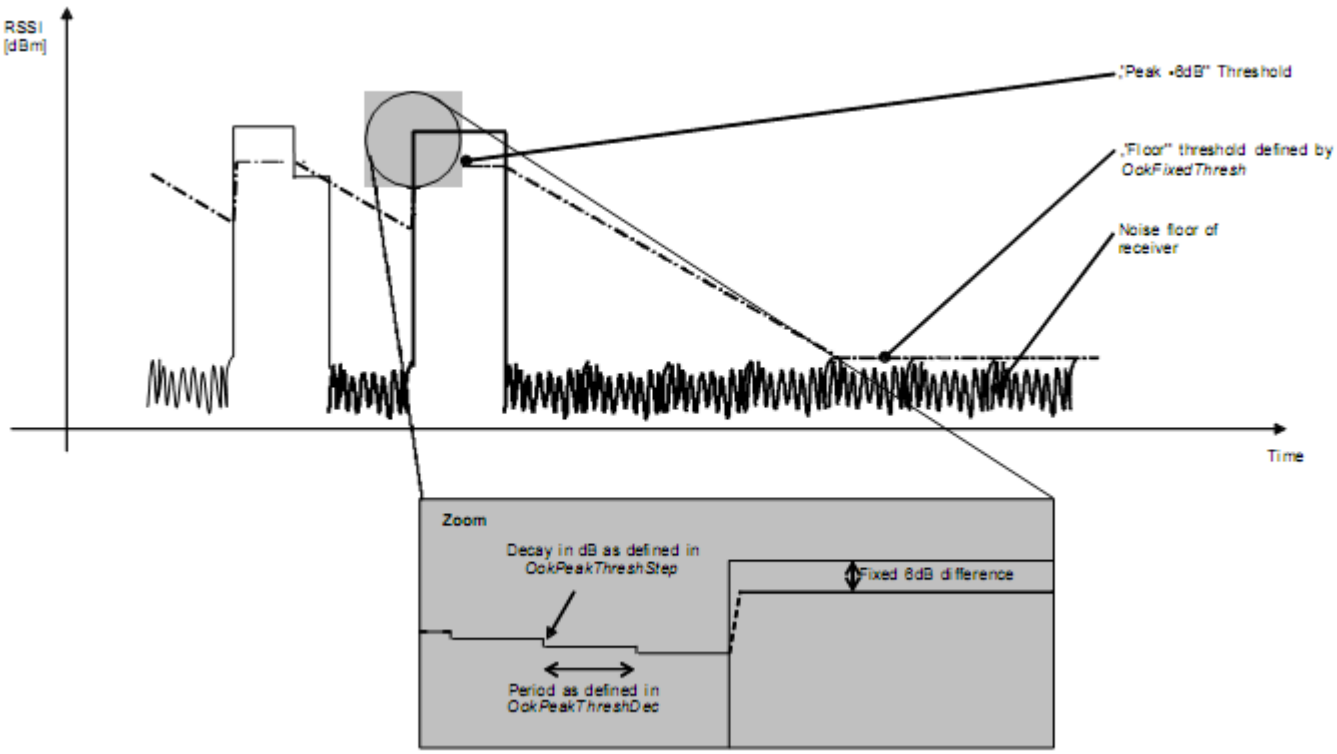

Figure 10. OOK Peak Demodulator Description

In peak threshold mode the comparison threshold level is the peak value of the RSSI, reduced by 6dB. In the absence of an input signal, or during the reception of a logical "0", the acquired peak value is decremented by one *OokPeakThreshStep* every *OokPeakThreshDec* period.

When the RSSI output is null for a long time (for instance after a long string of "0" received, or if no transmitter is present), the peak threshold level will continue falling until it reaches the "Floor Threshold", programmed in *OokFixedThresh*.

The default settings of the OOK demodulator lead to the performance stated in the electrical specification. However, in applications in which sudden signal drops are awaited during a reception, the three parameters should be optimized accordingly.

Optimizing the Floor Threshold

OokFixedThresh determines the sensitivity of the OOK receiver, as it sets the comparison threshold for weak input signals (i.e. those close to the noise floor). Significant sensitivity improvements can be generated if configured correctly.

Note that the noise floor of the receiver at the demodulator input depends on:

- The noise figure of the receiver.
- The gain of the receive chain from antenna to base band.
- The matching - including SAW filter if any.
- The bandwidth of the channel filters.

It is therefore important to note that the setting of *OokFixedThresh* will be application dependant. The following procedure is recommended to optimize *OokFixedThresh*.

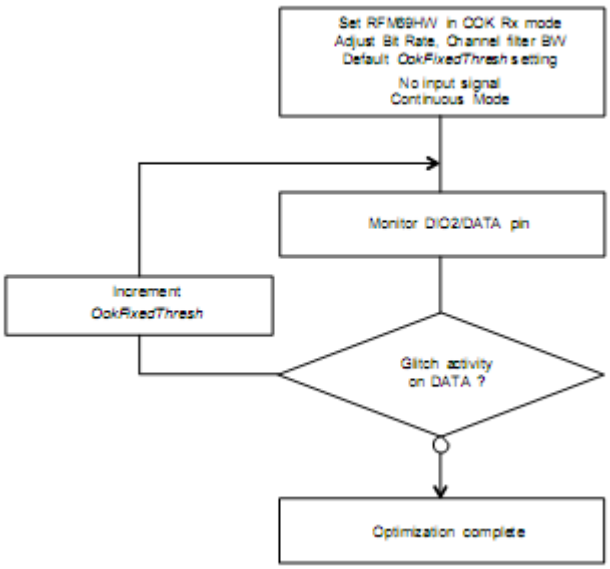

Figure 11. Floor Threshold Optimization

The new floor threshold value found during this test should be used for OOK reception with those receiver settings.

Optimizing OOK Demodulator for Fast Fading Signals

A sudden drop in signal strength can cause the bit error rate to increase. For applications where the expected signal drop can be estimated, the following OOK demodulator parameters *OokPeakThreshStep* and *OokPeakThreshDec* can be optimized as described below for a given number of threshold decrements per bit. Refer to *RegOokPeak* to access those settings.

Alternative OOK Demodulator Threshold Modes

In addition to the Peak OOK threshold mode, the user can alternatively select two other types of threshold detectors:

- Fixed Threshold: The value is selected through *OokFixedThresh*
- Average Threshold: Data supplied by the RSSI block is averaged, and this operation mode should only be used with DC-free encoded data.

3.4.12. Bit Synchronizer

The Bit Synchronizer is a block that provides a clean and synchronized digital output, free of glitches. Its output is made available on pin DIO1/DCLK in Continuous mode and can be disabled through register settings. However, for optimum receiver performance its use when running Continuous mode is strongly advised.

The Bit Synchronizer is automatically activated in Packet mode. Its bit rate is controlled by *BitRateMsb* and *BitRateLsb* in *RegBitrate.*

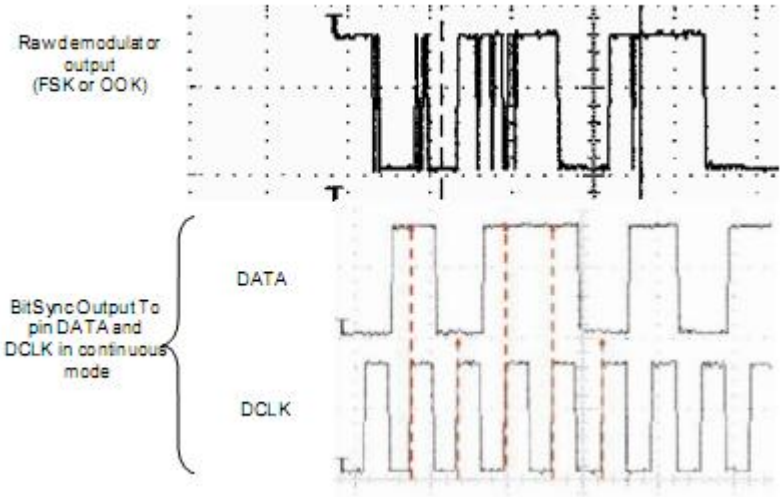

Figure 12. Bit Synchronizer Description

To ensure correct operation of the Bit Synchronizer, the following conditions have to be satisfied:

- A preamble (0x55 or 0xAA) of 12 bits is required for synchronization (from the *RxReady* interrupt)
- The subsequent payload bit stream must have at least one transition form '0' to '1' or '1' to '0 every 16 bits during data transmission
- The bit rate matching between the transmitter and the receiver must be better than 6.5 %.

Notes - If the Bit Rates of transmitter and receiver are known to be the same, the LJ1269H will be able to receive an infinite unbalanced sequence (all "0s" or all "1s") with no restriction.

- If there is a difference in Bit Rate between Tx and Rx, the amount of adjacent bits at the same level that the BitSync can withstand can be estimated as follows:

$$NumberOfBits = \frac{1}{2} * \frac{BR}{\Delta BR}$$

- This implies approximately 6 consecutive unbalanced bytes when the Bit Rate precision is 1%, which is easily achievable (crystal tolerance is in the range of 50 to 100 ppm).

3.4.13. Frequency Error Indicator

This function provides information about the frequency error of the local oscillator (LO) compared with the carrier frequency of a modulated signal at the input of the receiver. W hen the FEI block is launched, the frequency error is measured and the

signed result is loaded in *FeiValue* in *RegFei*, in 2"s complement format. The time required for an FEI evaluation is 4 times the bit period.

To ensure a proper behavior of the FEI:

- The operation must be done during the reception of preamble
- The sum of the frequency offset and the 20 dB signal bandwidth must be lower than the base band filter bandwidth

The 20 dB bandwidth of the signal can be evaluated as follows (double-side bandwidth):

$$BW20dB=2\times\{FDEV+\frac{BR}{2}\}$$

The frequency error, in Hz, can be calculated with the following formula:

$$FEI = FSTEP\times FeiValue$$

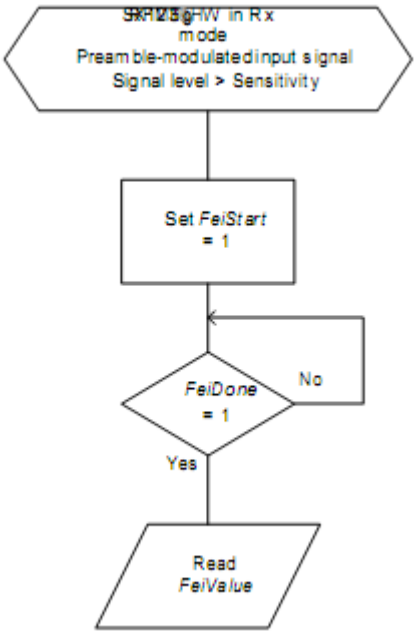

Figure 13. FEI Process

3.4.14. Automatic Frequency Correction

The AFC is based on the FEI block, and therefore the same input signal and receiver setting conditions apply. W hen the AFC procedure is done, *AfcValue* is directly subtracted to the register that defines the frequency of operation of the module, FRF. The AFC can be launched:

- Each time the receiver is enabled, if *AfcAutoOn* = 1
- Upon user request, by setting bit *AfcStart* in *RegAfcFei*, if *AfcAutoOn* = 0

When the AFC is automatically triggered (*AfcAutoOn* = 1), the user has the option to:

- Clear the former AFC correction value, if *AfcAutoClearOn* = 1
- Start the AFC evaluation from the previously corrected frequency. This may be useful in systems in which the LO keeps on drifting in the "same direction". Ageing compensation is a good example.

The LJ1269H offers an alternate receiver bandwidth setting during the AFC phase, to accommodate large LO drifts. If the user considers that the received signal may be out of the receiver bandwidth, a higher channel filter bandwidth can be programmed in *RegAfcBw*, at the expense of the receiver noise floor, which will impact upon sensitivity.

3.4.15. Optimized Setup for Low Modulation Index Systems

- For wide band systems, where AFC is usually not required (XTAL inaccuracies do not typically impact the sensitivity), it is recommended to offset the LO frequency of the receiver to avoid desensitization. This can be simply done by modifying *Frf* in *RegFrfLsb*. A good rule of thumb is to offset the receiver"s LO by 10% of the expected transmitter frequency deviation.
- For narrow band systems, it is recommended to perform AFC. The LJ1269H has a dedicated AFC, enabled when *AfcLowBetaOn* in *RegAfcCtrl* is set to 1. A frequency offset, programmable through *LowBetaAfcOffset* in *RegTestAfc*, is added and is calculated as follows:

$$Offset = LowBetaAfcOffset \times 488\ Hz$$

The user should ensure that the programmed offset exceeds the DC canceller"s cutoff frequency, set through *DccFreqAfc* in *RegAfcBw.*

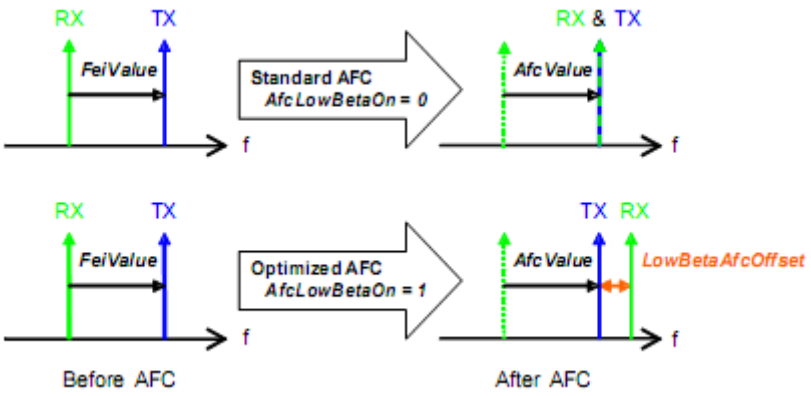

Figure 14. Optimized AFC (AfcLowBetaOn=1)

As shown on Figure 15, a standard AFC sequence uses the result of the FEI to correct the LO frequency and align both local oscillators. W hen the optimized AFC is enabled (*AfcLowBetaOn=1*), the receiver"s LO is corrected by "*FeiValue + LowBetaAfcOffset*".
When the optimized AFC routine is enabled, the receiver startup time can be computed as follows (refer to section 4.2.3):

$$TS_RE_AGC\&AFC\ (optimized\ AFC) = Tana + 4.Tcf + 4.Tdcc + 3.Trssi + 2.Tafc + 2.Tpllafc$$

3.4.16. Temperature Sensor

W hen temperature is measured, the receiver ADC is used to digitize the sensor response. Most receiver blocks are disabled, and temperature measurement can only be triggered in Standby or Frequency Synthesizer modes.

The response of the temperature sensor is -1°C / Lsb. A CMOS temperature sensor is not accurate by nature, therefore it should be calibrated at ambient temperature for precise temperature readings.

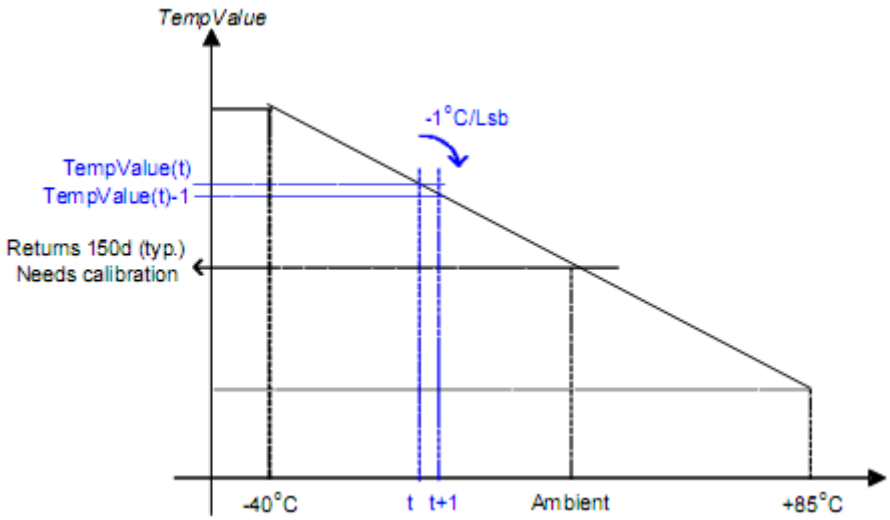

Figure 15. Temperature Sensor Response

It takes less than 100 microseconds for the LJ1269H to evaluate the temperature (from setting *TempMeasStart* to 1 to *TempMeasRunning* reset).

3.4.17. Timeout Function

The LJ1269H includes a Timeout function, which allows it to automatically shut-down the receiver after a receive sequence and therefore save energy.

- Timeout interrupt is generated *TimeoutRxStart x 16x Tbit* after switching to RX mode if *RssiThreshold* flag does not raise within this time frame
- Timeout interrupt is generated *TimeoutRssiThresh x 16 x Tbit* after *RssiThreshold* flag has been raised.

This timeout interrupt can be used to warn the companion processor to shut down the receiver and return to a lower power mode.

4. Operating Modes

4.1. Basic Modes

The circuit can be set in 5 different basic modes which are described in Table 16.
By default, when switching from a mode to another one, the sub-blocks are woken up according to a pre-defined and optimized sequence. Alternatively, these operating modes can be selected directly by disabling the automatic sequencer (*SequencerOff* in *RegOpMode = 1*).

Table 16 Basic Transceiver Modes

ListenOn in RegOpMode	Mode in RegOpMode	Selected mode	Enabled blocks
0	000	Sleep Mode	None
0	001	Stand-by Mode	Top regulator and crystal oscillator
0	010	FS Mode	Frequency synthesizer
0	011	Transmit Mode	Frequency synthesizer and transmitter
0	100	Receive Mode	Frequency synthesizer and receiver
1	X	Listen Mode	See Listen Mode, section 4.3

4.2. Automatic Sequencer and Wake-Up Times

By default, when switching from one operating mode to another, the circuit takes care of the sequence of events in such a way that the transition timing is optimized. For example, when switching from Sleep mode to Transmit mode, the LJ1269H goes first to Standby mode (XO started), then to frequency synthesizer mode, and finally, when the PLL has locked, to transmit mode. Entering transmit mode is also made according to a predefined sequence starting with the wake-up of the PA regulator before applying a ramp-up on the PA and generating the DCLK clock.

- The crystal oscillator wake-up time, TS_OSC, is directly related to the time for the crystal oscillator to reach its steady state. It depends notably on the crystal characteristics.
- The frequency synthesizer wake-up time, TS_FS, is directly related to the time needed by the PLL to reach its steady state. The signal PLL_LOCK, provided on an external pin, gives an indication of the lock status. It goes high when the PLL reaches its locking range.

Four specific cases can be highlighted:

- Transmitter Wake Up time from Sleep mode = *TS_OSC + TS_FS + TS_TR*
- Receiver Wake Up time from Sleep mode = *TS_OSC + TS_FS + TS_RE*
- Receiver Wake Up time from Sleep mode, AGC enabled = *TS_OSC + TS_FS + TS_RE_AGC*
- Receiver Wake Up time from Sleep mode, AGC and AFC enable = *TS_OSC + TS_FS + TS_RE_AGC&AFC*

These timings are detailed in sections 4.2.1 and 4.2.3.

In applications where the target average power consumption, or the target startup time, do not require setting the LJ1269H in the lowest power modes (Sleep or Standby), the respective timings *TS_OSC* and *TS_FS* in the former equations can be omitted.

4.2.1. Transmitter Startup Time

The transmitter wake-up time, TS_TR, is given by the sequence controlled by the digital part. It is a pure digital delay which depends on the bit rate and the ramp-up time. In FSK mode, this time can be derived from the following equation.

$$TS_TR = 5\mu S + 1.25 \times PaRamp + \frac{1}{2} \times Tbit$$

where *PaRamp* is the ramp-up time programmed in *RegPaRamp* and *Tbit* is the bit time.
In OOK mode, this equation can be simplified to the following:

$$TS_TR = 5\mu s + \frac{1}{2} \times Tbit$$

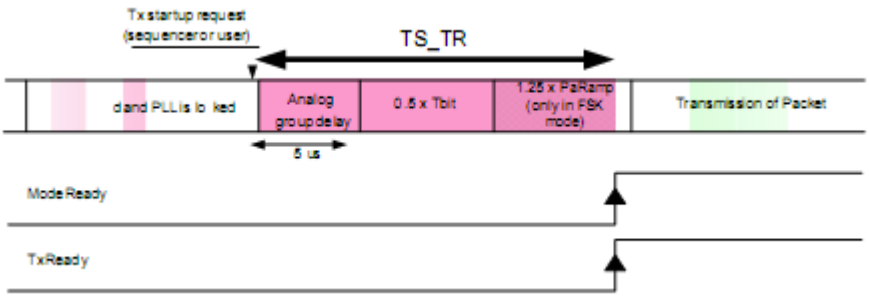

Figure 16. Tx Startup, FSK and OOK

4.2.2. Tx Start Procedure

As described in the former section, *ModeReady* and *TxReady* interrupts warn the uC that the transmitter is ready to transmit data

- In Continuous mode, the preamble bits preceding the payload can be applied on the DIO2/DATA pin immediately after any of these interrupts have fired. The DCLK signal, activated on pin DIO1/DCLK can also be used to start toggling the DATA pin, as described on Figure 30.

- In Packet mode, the RFM69HW will automatically modulate the RF signal with preamble bytes as soon as *TxReady* or *ModeReady* happen. The actual packet transmission (starting with the number of preambles specified in *PreambleSize*) will start when the *TxStartCondition* is fulfilled.

4.2.3. Receiver Startup Time

It is highly recommended to use the built-in sequencer of the LJ1269H , to optimize the delays when setting the Modulein receive mode. It guarantees the shortest startup times, hence the lowest possible energy usage, for battery operated systems.

The startup times of the receiver can be calculated from the following:

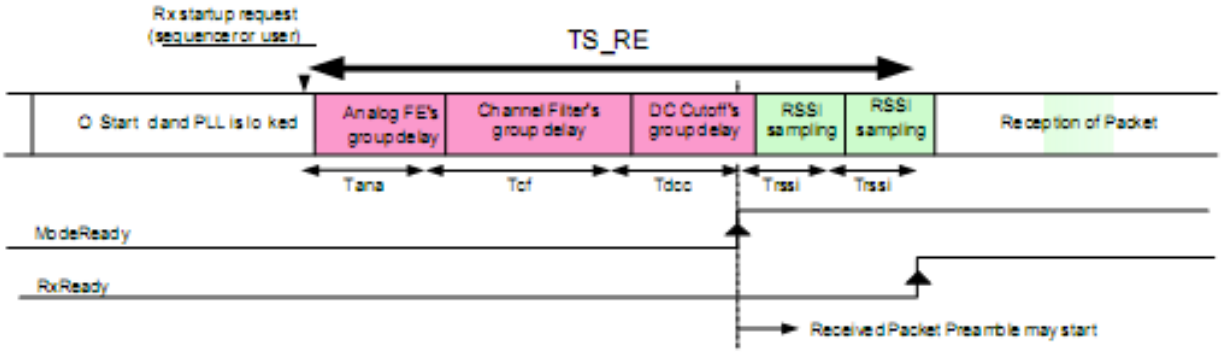

Figure 17. Rx Startup - No AGC, no AFC

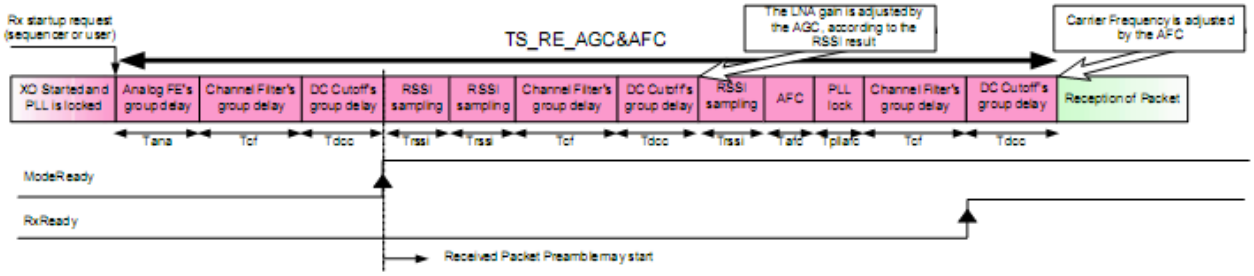

Figure 18. Rx Startup - AGC, no AFC

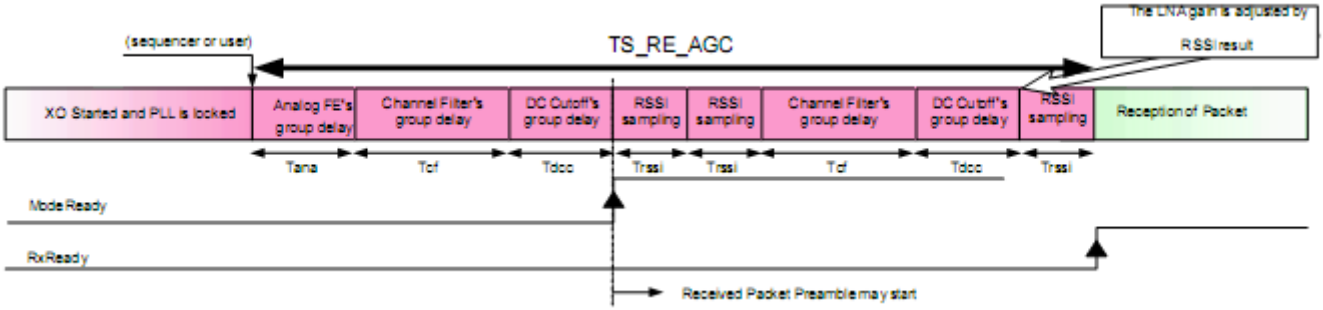

Figure 19. Rx Startup - AGC and AFC

The different timings shown above are as follows:

- Group delay of the analog front end: *Tana = 20 us*
- Channel filter"s group delay in FSK mode: *Tcf = 21 / (4.RxBw)*
- Channel filter"s group delay in OOK mode: *Tcf = 34 / (4.RxBw)*
- DC Cutoff"s group delay: *Tdcc = max(8 , 2^(round(log2(8.RxBw.Tbit)+1)) / (4.RxBw)*
- PLL lock time after AFC adjustment: *Tpllafc = 5 / PLLBW (PLLBW = 300 kHz)*
- AFC sample time: *Tafc = 4 x Tbit* (also denoted TS_AFC in the general specification)
- RSSI sample time: *Trssi = 2 x int(4.RxBw.Tbit)/(4.RxBw)* (aka TS_RSSI)

Note *The above timings represent maximum settling times, and shorter settling times may be observed in real cases*

4.2.4. Rx Start Procedure

As described in the former sections, the *RxReady* interrupt warns the uC that the receiver is ready.

- In Continuous mode with Bit Synchronizer, the receiver will start locking its Bit Synchronizer on a minimum or 12 bits of received preamble (see section 3.4.13 for details), before the reception of correct Data, or Sync W ord (if enabled) can occur.
- In Continuous mode without Bit Synchronizer, valid data will be available on DIO2/DATA right after the *RxReady* interrupt.
- In Packet mode, the receiver will start locking its Bit Synchronizer on a minimum or 12 bits of received preamble (see section 3.4.13 for details), before the reception of correct Data, or Sync W ord (if enabled) can occur.

4.2.5. Optimized Frequency Hopping Sequences

In a frequency hopping-like application, it is required to turn off the transmitter when hopping from one channel to another, to avoid spectral splatter and obtain the best spectral purity.

- Transmitter hop from Ch A to Ch B: it is advised to step through the Rx mode:
  （0）LJ1269H is in Tx mode in Ch A
  （1）Program the LJ1269H in Rx mode
  （2）Change the carrier frequency in the *RegFrf* register
  （3）Turn the transceiver back to Tx mode
  （4）Respect the Tx start procedure, described in section 4.2.2
- Receiver hop from Ch A to Ch B:
  （0）LJ1269H is in Rx mode in Ch A
  （1）Change the carrier frequency in the *RegFrf* registers
  （2）Program the LJ1269H in FS mode
  （3）Turn the transceiver back to Rx mode
  （4）Respect the Rx start procedure, described in section 4.2.4

Note all sequences described above are assuming that the sequencer is turned on (SequencerOff=0 in RegOpMode).

4.3 Listen Mode

The circuit can be set to Listen mode, by setting *ListenOn* in *RegOpMode* to 1 while in Standby mode. In this mode, LJ1269H spends most of the time in Idle mode, during which only the RC oscillator runs. Periodically the receiver is woken up and listens for an RF signal. If a wanted signal is detected, the receiver is kept on and the data is demodulated.
Otherwise, if a wanted signal hasn't been detected after a pre-defined period of time, the receiver is disabled until the next time period.
This periodical Rx wake-up requirement is very common in low power applications. On LJ1269H it is handled locally by the Listen mode block without using uC resources or energy.
The simplified timing diagram of this procedure is illustrated in Figure 21.

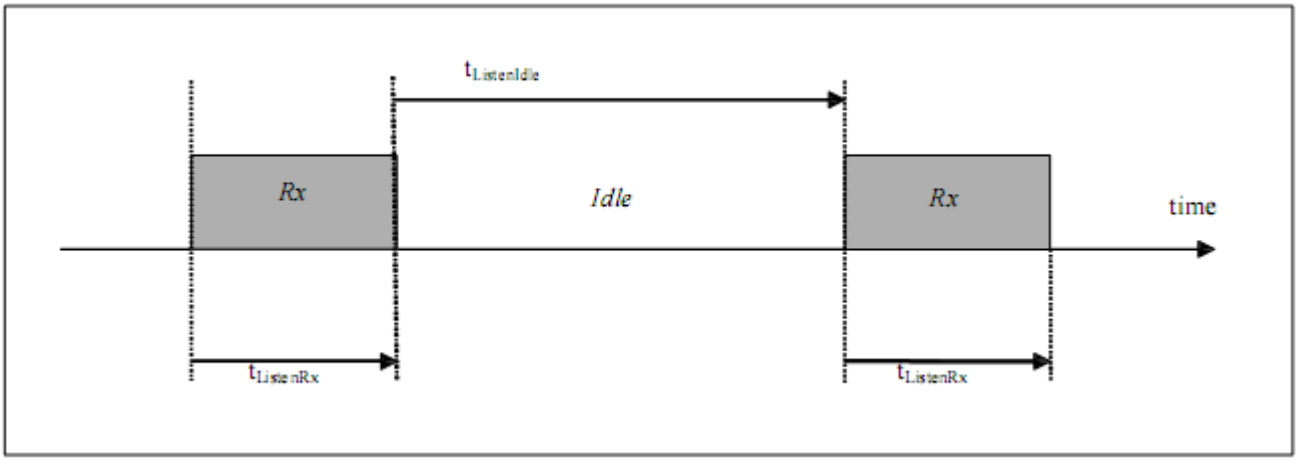

Figure 20. Listen Mode Sequence (no wanted signal is received)

4.3.1. Timings

The duration of the Idle phase is given by $t_{ListenIdle}$. The time during which the receiver is on and waits for a signal is given by $t_{ListenRx}$. $t_{ListenRx}$ includes the wake-up time of the receiver, described in section 4.2.3. This duration can be programmed in the configuration registers via the serial interface.

Both time periods $t_{ListenRx}$ and $t_{ListenIdle}$ (denoted $t_{ListenX}$ in the following text) are fixed by two parameters from the configuration register and are calculated as follows:

$$tListenX = ListenCoefX * Listen\ Re\ solX$$

where *ListenResolX* is the Rx or Idle resolution and is independently programmable on three values (64us, 4.1ms or 262ms), whereas *ListenCoefX* is an integer between 1 and 255. All parameters are located in *RegListen* registers.

The timing ranges are tabulated in Table 17 below.

Table 17 Range of Durations in Listen Mode

ListenResolX	Min duration (ListenCoef = 1)	Max duration (ListenCoef = 255)
01	64us	16ms
10	4.1ms	1.04s
11	0.26s	67s

Notes - the accuracy of the typical timings given in Table 17 will depend in the RC oscillator calibration
- RC oscillator calibration is required, and must be performed at power up. See section 4.3.5 for details

4.3.2. Criteria

The criteria taken for detecting a wanted signal and hence deciding to maintain the receiver on is defined by *ListenCriteria* in *RegListen1.*

Table 18 Signal Acceptance Criteria in Listen Mode

ListenCriteria	Input Signal Power >=RssiThreshold	SyncAddressMatch
0	Required	Not Required
1	Required	Required

4.3.3. End of Cycle Actions

The action taken after detection of a packet, is defined by *ListenEnd* in *RegListen3*, as described in the table below.

Table 19 End of Listen Cycle Actions

ListenEnd	Description
00	Modulestays in Rx mode. Listen mode stops and must be disabled.
01	Modulestays in Rx mode until PayloadReady or Timeout interrupt occurs. It then goes to the mode defined by Mode. Listen mode stops and must be disabled.
10	Modulestays in Rx mode until *PayloadReady* or *Timeout* interrupt occurs. Listen mode then resumes in Idle state. FIFO content is lost at next Rx wakeup.

Upon detection of a valid packet, the sequencing is altered, as shown below:

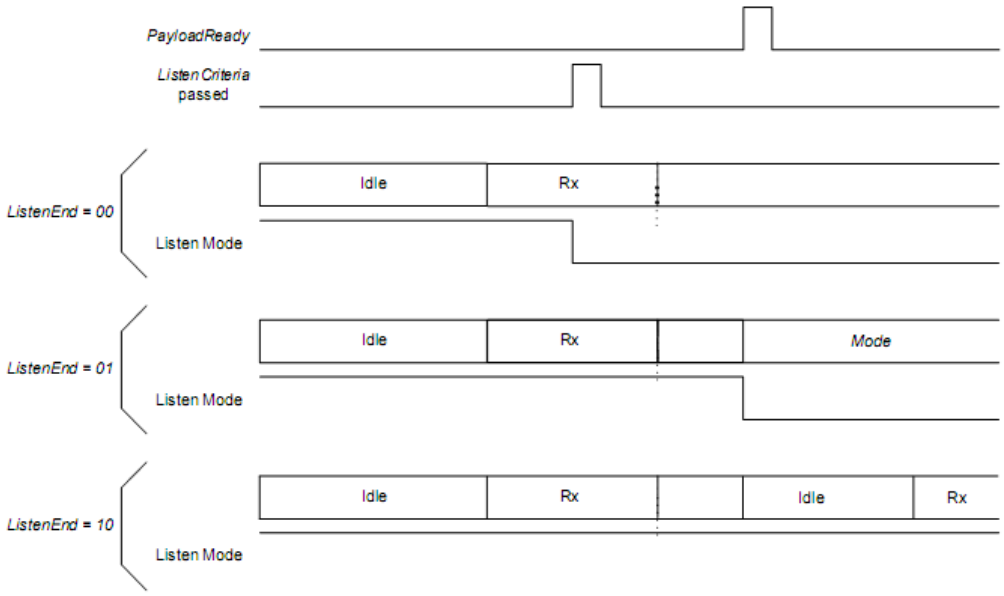

Figure 21. Listen Mode Sequence (wanted signal is received)

4.3.4. Stopping Listen Mode

To abort Listen mode operation, the following procedure must be respected:

- Program RegOpMode with ListenOn=0, ListenAbort=1, and the desired setting for the Mode bits (Sleep, Stdby, FS, Rx or Tx mode) in a single SPI access
- Program RegOpMode with ListenOn=0, ListenAbort=0, and the desired setting for the Mode bits (Sleep, Stdby, FS, Rx or Tx mode) in a second SPI access

4.3.5. RC Timer Accuracy

All timings of the Listen Mode rely on the accuracy of the internal low-power RC oscillator. This oscillator is automatically calibrated at the device power-up, and it is a user-transparent process.

For applications enduring large temperature variations, and for which the power supply is never removed, RC calibration can be performed upon user request. *RcCalStart* in *RegOsc1* can be used to trigger this calibration, and the flag *RcCalDone* will be set automatically when the calibration is over.

4.4. AutoModes

Automatic modes of packet handler can be enabled by configuring the related parameters in RegAutoModes. The intermediate mode of the Moduleis called IntermediateMode and the enter and exit conditions to/from this intermediate mode can be configured through the parameters EnterCondition & ExitCondition.
The enter and exit conditions cannot be used independently of each other i.e. both should be enabled at the same time. The initial and the final state is the one configured in Mode in RegOpMode. The initial & final states can be different by configuring the modes register while the Moduleis in intermediate mode. The pictorial description of the auto modes is shown below.

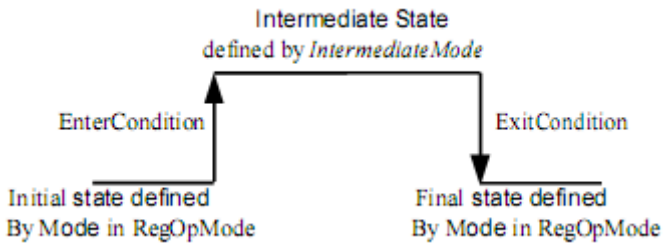

Figure 22. Auto Modes of Packet Handler

Some typical examples of AutoModes usage are described below:

- Automatic transmission (AutoTx) : Mode = Sleep, IntermediateMode = Tx, EnterCondition = FifoLevel, ExitCondition = PacketSent
- Automatic reception (AutoRx) : Mode = Rx, IntermediateMode = Sleep, EnterCondition = CrcOk, ExitCondition = falling edge of FifoNotEmpty
- Automatic reception of acknowledge (AutoRxAck): Mode = Tx, IntermediateMode = Rx, EnterCondition = PacketSent, ExitCondition = CrcOk
- ...

5. Data Processing

5.1. Overview

5.1.1. Block Diagram

Figure below illustrates the LJ1269H data processing circuit. Its role is to interface the data to/from the modulator/ demodulator and the uC access points (SPI and DIO pins). It also controls all the configuration registers.

The circuit contains several control blocks which are described in the following paragraphs.

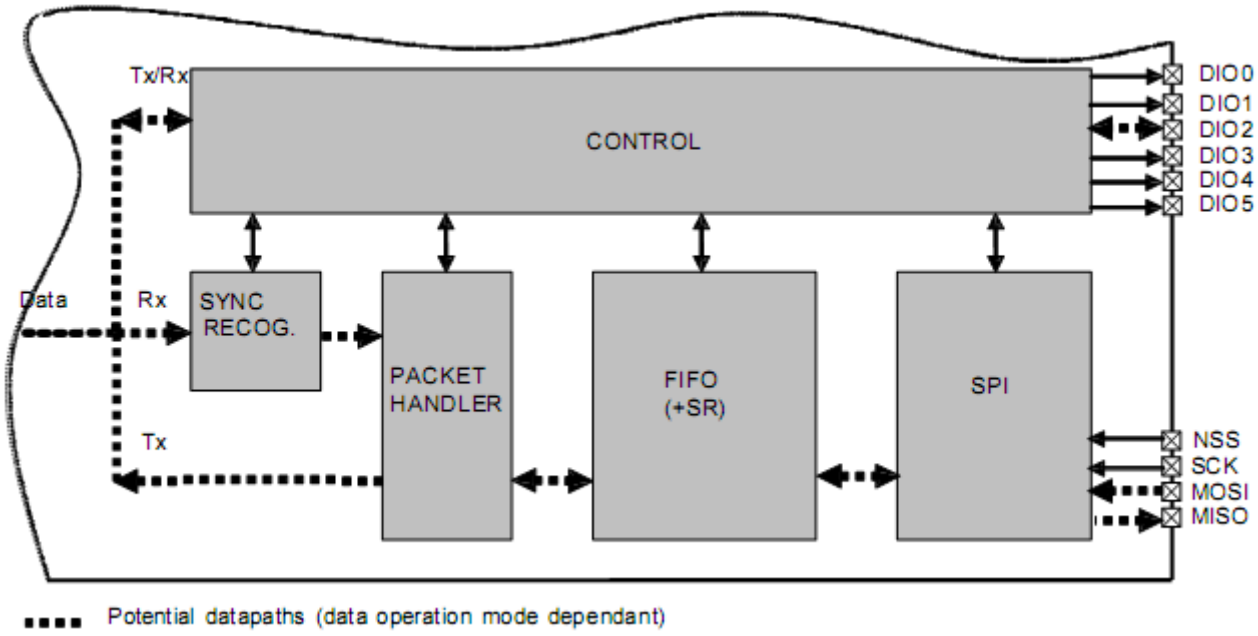

Figure 23. LJ1269H Data Processing Conceptual View

The LJ1269H implements several data operation modes, each with their own data path through the data processing section. Depending on the data operation mode selected, some control blocks are active whilst others remain disabled.

5.1.2. Data Operation Modes

The LJ1269H has two different data operation modes selectable by the user:

- Continuous mode: each bit transmitted or received is accessed in real time at the DIO2/DATA pin. This mode may be used if adequate external signal processing is available.

- Packet mode (recommended): user only provides/retrieves payload bytes to/from the FIFO. The packet is automatically built with preamble, Sync word, and optional AES, CRC, and DC-free encoding schemes The reverse operation is performed in reception. The uC processing overhead is hence significantly reduced compared to Continuous mode. Depending on the optional features activated (CRC, AES, etc) the maximum payload length is limited to FIFO size, 255 bytes or unlimited.

Each of these data operation modes is described fully in the following sections.

5.2. Control Block Description

5.2.1. SPI Interface

The SPI interface gives access to the configuration register via a synchronous full-duplex protocol corresponding to CPOL = 0 and CPHA = 0 in Motorola/Freescale nomenclature. Only the slave side is implemented.

Three access modes to the registers are provided:

- SINGLE access: an address byte followed by a data byte is sent for a write access whereas an address byte is sent and a read byte is received for the read access. The NSS pin goes low at the begin of the frame and goes high after the data byte.
- BURST access: the address byte is followed by several data bytes. The address is automatically incremented internally between each data byte. This mode is available for both read and write accesses. The NSS pin goes low at the beginning of the frame and stay low between each byte. It goes high only after the last byte transfer.
- FIFO access: if the address byte corresponds to the address of the FIFO, then succeeding data byte will address the FIFO. The address is not automatically incremented but is memorized and does not need to be sent between each data byte. The NSS pin goes low at the beginning of the frame and stay low between each byte. It goes high only after the last byte transfer.

Figure below shows a typical SPI single access to a register.

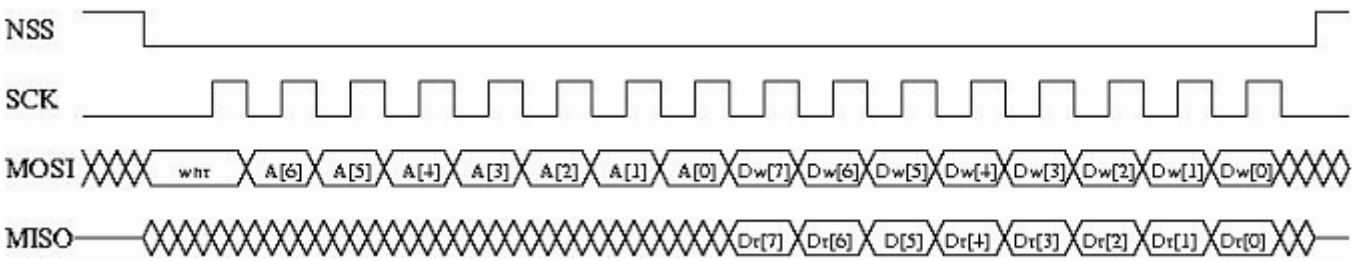

Figure 24. SPI Timing Diagram (single access)

MOSI is generated by the master on the falling edge of SCK and is sampled by the slave (i.e. this SPI interface) on the rising edge of SCK. MISO is generated by the slave on the falling edge of SCK.

A transfer always starts by the NSS pin going low. MISO is high impedance when NSS is high.

The first byte is the address byte. It is made of:

- wnr bit, which is 1 for write access and 0 for read access
- 7 bits of address, MSB first

The second byte is a data byte, either sent on MOSI by the master in case of a write access, or received by the master on MISO in case of read access. The data byte is transmitted MSB first.

Proceeding bytes may be sent on MOSI (for write access) or received on MISO (for read access) without rising NSS and re-sending the address. In FIFO mode, if the address was the FIFO address then the bytes will be written / read at the FIFO address. In Burst mode, if the address was not the FIFO address, then it is automatically incremented at each new byte received.
The frame ends when NSS goes high. The next frame must start with an address byte. The SINGLE access mode is actually a special case of FIFO / BURST mode with only 1 data byte transferred.

During the write access, the byte transferred from the slave to the master on the MISO line is the value of the written register before the write operation.

5.2.2. FIFO

Overview and Shift Register (SR)
In packet mode of operation, both data to be transmitted and that has been received are stored in a configurable FIFO (First In First Out) device. It is accessed via the SPI interface and provides several interrupts for transfer management.

The FIFO is 1 byte wide hence it only performs byte (parallel) operations, whereas the demodulator functions serially. A shift register is therefore employed to interface the two devices. In transmit mode it takes bytes from the FIFO and outputs them serially (MSB first) at the programmed bit rate to the modulator. Similarly, in Rx the shift register gets bit by bit data from the demodulator and writes them byte by byte to the FIFO. This is illustrated in figure below.

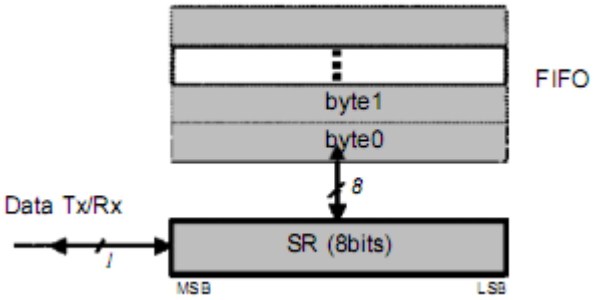

Figure 25. FIFO and Shift Register (SR)

Note When switching to Sleep mode, the FIFO can only be used once the ModeReady flag is set (quasi immediate from all modes except from Tx)

Size
The FIFO size is fixed to 66 bytes.

Interrupt Sources and Flags

- FifoNotEmpty: FifoNotEmpty interrupt source is low when byte 0, i.e. whole FIFO, is empty. Otherwise it is high. Note that when retrieving data from the FIFO, FifoNotEmpty is updated on NSS falling edge, i.e. when FifoNotEmpty is updated to low state the currently started read operation must be completed. In other words, FifoNotEmpty state must be checked after each read operation for a decision on the next one (FifoNotEmpty = 1: more byte(s) to read; FifoNotEmpty = 0: no more byte to read).
- FifoFull: FifoFull interrupt source is high when the last FIFO byte, i.e. the whole FIFO, is full. Otherwise it is low.

- FifoOverrunFlag: FifoOverrunFlag is set when a new byte is written by the user (in Tx or Standby modes) or the SR (inRx mode) while the FIFO is already full. Data is lost and the flag should be cleared by writing a 1, note that the FIFO will also be cleared.
- PacketSent: PacketSent interrupt source goes high when the SR's last bit has been sent.
- FifoLevel: Threshold can be programmed by FifoThreshold in RegFifoThresh. Its behavior is illustrated in figure below.

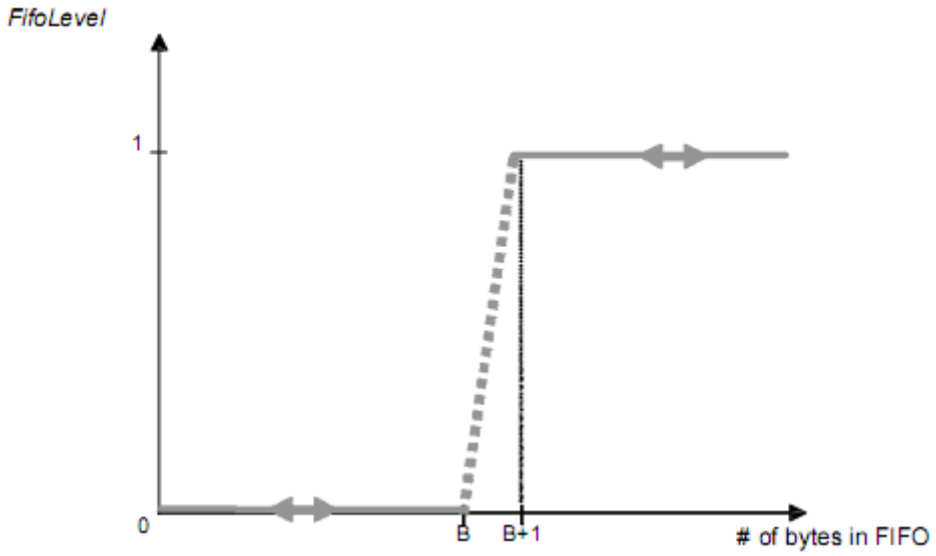

Figure 26. FifoLevel IRQ Source Behavior

Note - FifoLevel interrupt is updated only after a read or write operation on the FIFO. Thus the interrupt cannot be dynamically updated by only changing the FifoThreshold parameter
- FifoLevel interrupt is valid as long as FifoFull does not occur. An empty FIFO will restore its normal operation

FIFO Clearing

Table below summarizes the status of the FIFO when switching between different modes

Table 20 Status of FIFO when Switching Between Different Modes of the Module

From	To	FIFO status	Comments
Stdby	Sleep	Not cleared	
Sleep	Stdby	Not cleared	
Stdby/Sleep	Tx	Not cleared	To allow the user to write the FIFO in Stdby/Sleep before Tx
Stdby/Sleep	Rx	Cleared	
Rx	Tx	Cleared	
Rx	Stdby/Sleep	Not cleared	To allow the user to read FIFO in Stdby/Sleep mode after Rx
Tx	Any	Cleared	

5.2.3. Sync Word Recognition

Overview

Sync word recognition (also called Pattern recognition) is activated by setting SyncOn in RegSyncConfig. The bit synchronizer must also be activated in continuous mode (automatically done in Packet mode) .

The block behaves like a shift register; it continuously compares the incoming data with its internally programmed Sync word and sets SyncAddressMatch when a match is detected. This is illustrated in Figure 28 below.

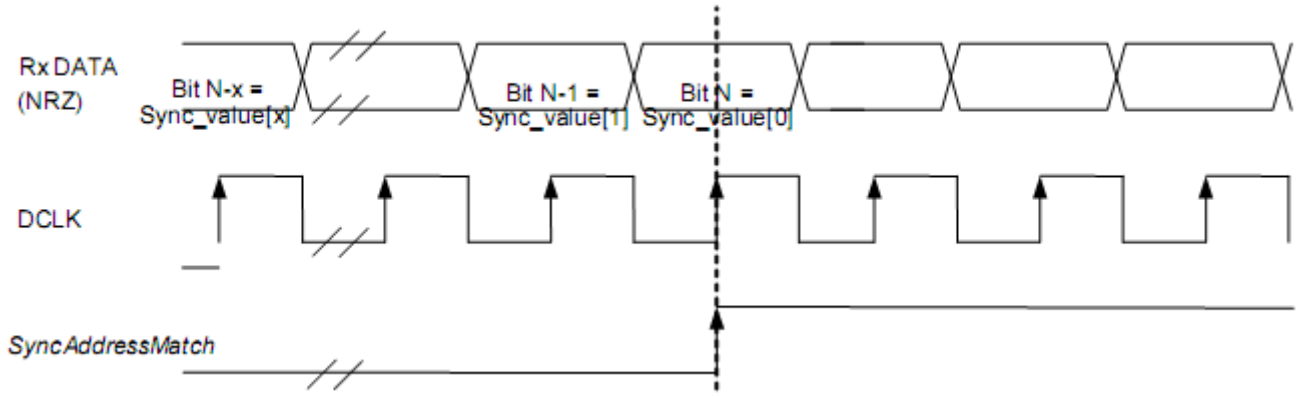

Figure 27. Sync Word Recognition

During the comparison of the demodulated data, the first bit received is compared with bit 7 (MSB) of *RegSyncValue1* and the last bit received is compared with bit 0 (LSB) of the last byte whose address is determined by the length of the Sync word.

W hen the programmed Sync word is detected the user can assume that this incoming packet is for the node and can be processed accordingly.

SyncAddressMatch is cleared when leaving Rx or FIFO is emptied.

Configuration

- Size: Sync word size can be set from 1 to 8 bytes (i.e. 8 to 64 bits) via SyncSize in RegSyncConfig. In Packet mode this field is also used for Sync word generation in Tx mode.
- Error tolerance: The number of errors tolerated in the Sync word recognition can be set from 0 to 7 bits to via SyncTol.
- Value: The Sync word value is configured in SyncValue(63:0). In Packet mode this field is also used for Sync word generation in Tx mode.

Note *SyncValue choices containing 0x00 bytes are not allowed*、

5.2.4. Packet Handler

The packet handler is the block used in Packet mode. Its functionality is fully described in section 5.5.

5.2.5. Control

The control block configures and controls the full module's behavior according to the settings programmed in the configuration registers.

5.3. Digital IO Pins Mapping

Six general purpose IO pins are available on the LJ1269H , and their configuration in Continuous or Packet mode is controlled through *RegDioMapping1* and *RegDioMapping2.*

5.3.1. DIO Pins Mapping in Continuous Mode

Table 21 DIO Mapping, Continuous Mode

Mode	Diox Mapping	DIO5	DIO4	DIO3	DIO2	DIO1	DIO0
Sleep	00	-	-	-	-	-	-
	01	-	-	-	-	-	-
	10	-	-	AutoMode	-	-	-
	11	ModeReady	-	-	-	-	ModeReady
Stdby	00	ClkOut	-	-	-	-	-
	01	-	-	-	-	-	-
	10	-	-	AutoMode	-	-	-
	11	ModeReady	-	-	-	-	ModeReady
FS	00	ClkOut	-	-	-	-	PllLock
	01	-	-	-	-	-	-
	10	-	-	AutoMode	-	-	-
	11	ModeReady	PllLock\	-	-	PllLock	ModeReady
Rx	00	ClkOut	Timeout	Rssi	Data	Dclk	SyncAddress
	01	Rssi	RxReady	RxReady	Data	RxReady	Timeout
	10	-	SyncAddress	AutoMode	Data	-	Rssi
	11	ModeReady	PllLock	Timeout	Data	SyncAddress	ModeReady
Tx	00	ClkOut	TxReady	TxReady	Data	Dclk	PllLock
	01	ClkOut	TxReady	TxReady	Data	TxReady	TxReady
	10	-	-	AutoMode	Data	-	-
	11	ModeReady	PllLock	TxReady	Data	PllLock	ModeReady

5.3.2. DIO Pins Mapping in Packet Mode

Table 22 DIO Mapping, Packet Mode

Mode	Diox Mapping	DIO5	DIO4	DIO3	DIO2	DIO1	DIO0
Sleep	00	-	-	FifoFull	FifoNotEmpty	FifoLevel	-
	01	-	-	-	-	FifoFull	-
	10	-	-	-	-	FifoNotEmpty	-
	11	ModeReady	-	-	AutoMode	-	-
Stdby	00	ClkOut	-	FifoFull	FifoNotEmpty	FifoLevel	-
	01	-	-	-	-	FifoFull	-
	10	-	-	-	-	FifoNotEmpty	-
	11	ModeReady	-	-	AutoMode	-	-
FS	00	ClkOut	-	FifoFull	FifoNotEmpty	FifoLevel	-
	01	-	-	-	-	FifoFull	-
	10	-	-	-	-	FifoNotEmpty	-
	11	ModeReady	PllLock	PllLock	AutoMode	PllLock	PllLock
Rx	00	ClkOut	Timeout	FifoFull	FifoNotEmpty	FifoLevel	CrcOk
	01	Data	Rssi	Rssi	Data	FifoFull	PayloadReady
	10	-	RxReady	SyncAddress	-	FifoNotEmpty	SyncAddress
	11	ModeReady	PllLock	PllLock	AutoMode	PllLock	Rssi
Tx	00	ClkOut	ModeReady	FifoFull	FifoNotEmpty	FifoLevel	PacketSent
	01	Data	TxReady	TxReady	Data	FifoFull	TxReady
	10	-	-	-	-	FifoNotEmpty	-
	11	ModeReady	PllLock	PllLock	AutoMode	PllLock	PllLock

Note Received Data is only shown on the Data signal between RxReady and PayloadReady's rising edges

5.4. Continuous Mode

5.4.1. General Description

As illustrated in Figure 29, in Continuous mode the NRZ data to (from) the (de)modulator is directly accessed by the uC on the bidirectional DIO2/DATA pin. The FIFO and packet handler are thus inactive.

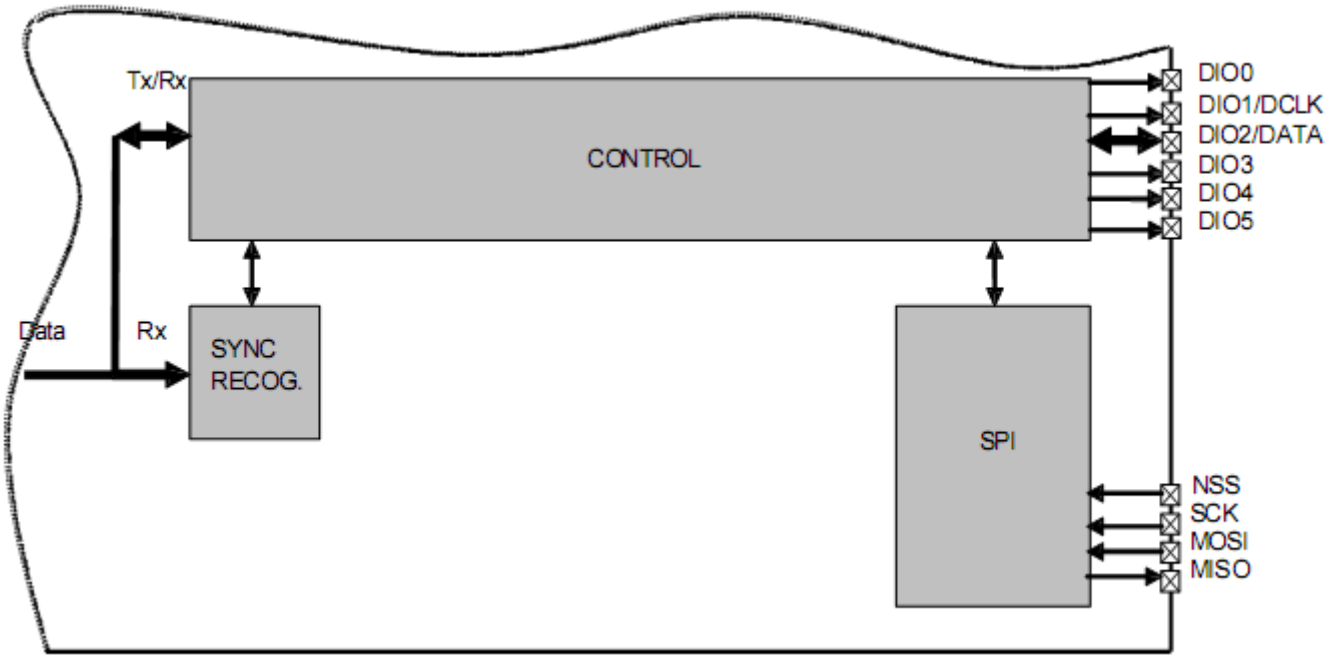

Figure 28. Continuous Mode Conceptual View

5.4.2. Tx Processing

In Tx mode, a synchronous data clock for an external uC is provided on DIO1/DCLK pin. Clock timing with respect to the data is illustrated in Figure 30. DATA is internally sampled on the rising edge of DCLK so the uC can change logic state anytime outside the grayed out setup/hold zone.

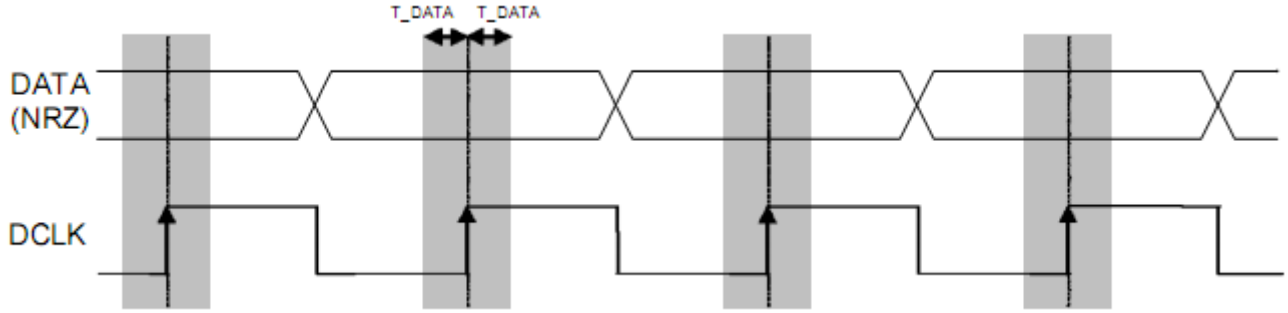

Figure 29. Tx Processing in Continuous Mode

Note the use of DCLK is required when the modulation shaping is enabled (see section 3.3.5).

5.4.3. Rx Processing

If the bit synchronizer is disabled, the raw demodulator output is made directly available on DATA pin and no DCLK signal is provided.

Conversely, if the bit synchronizer is enabled, synchronous cleaned data and clock are made available respectively on DIO2/DATA and DIO1/DCLK pins. DATA is sampled on the rising edge of DCLK and updated on the falling edge as illustrated below.

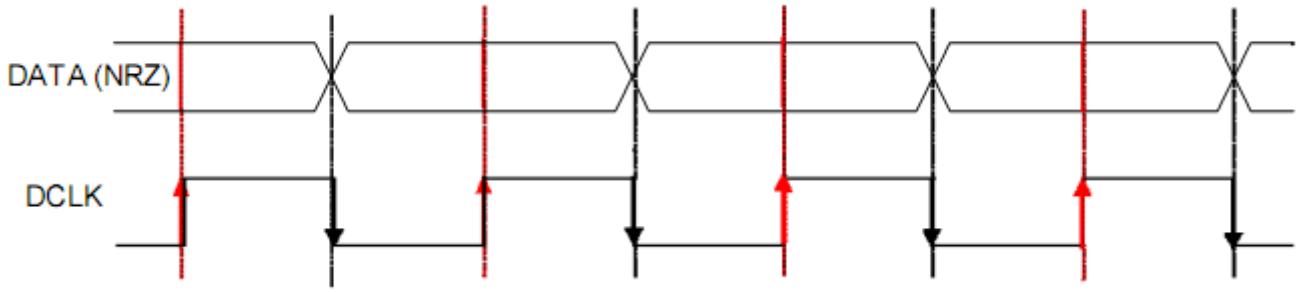

Figure 30. Rx Processing in Continuous Mode

Note in Continuous mode it is always recommended to enable the bit synchronizer to clean the DATA signal even if the DCLK signal is not used by the uC (bit synchronizer is automatically enabled in Packet mode).

5.5. Packet Mode

5.5.1. General Description

In Packet mode the NRZ data to (from) the (de)modulator is not directly accessed by the uC but stored in the FIFO and accessed via the SPI interface.

In addition, the LJ1269H packet handler performs several packet oriented tasks such as Preamble and Sync word generation, CRC calculation/check, whitening/dewhitening of data, Manchester encoding/decoding, address filtering, AES encryption/decryption, etc. This simplifies software and reduces uC overhead by performing these repetitive tasks within the RF Moduleitself.

Another important feature is ability to fill and empty the FIFO in Sleep/Stdby mode, ensuring optimum power consumption and adding more flexibility for the software.

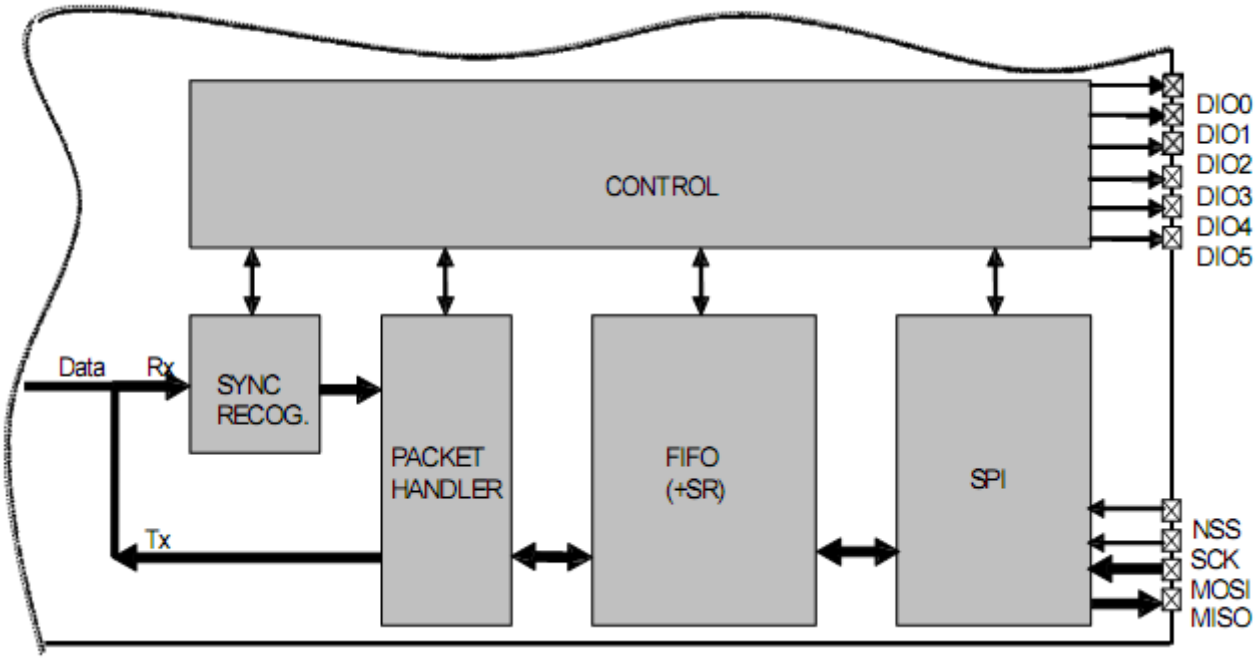

Figure 31. Packet Mode Conceptual View

Note *The Bit Synchronizer is automatically enabled in Packet mode.*

5.5.2. Packet Format

Fixed Length Packet Format

Fixed length packet format is selected when bit *PacketFormat* is set to 0 and *PayloadLength* is set to any value greater than 0.

In applications where the packet length is fixed in advance, this mode of operation may be of interest to minimize RF overhead (no length byte field is required). All nodes, whether Tx only, Rx only, or Tx/Rx should be programmed with the same packet length value.

The length of the payload is limited to 255 bytes if AES is not enabled else the message is limited to 64 bytes (i.e. max 65 bytes payload if Address byte is enabled).

The length programmed in *PayloadLength* relates only to the payload which includes the message and the optional address byte. In this mode, the payload must contain at least one byte, i.e. address or message byte.

An illustration of a fixed length packet is shown below. It contains the following fields:

- Preamble (1010...)
- Sync word (Network ID)
- Optional Address byte (Node ID)
- Message data
- Optional 2-bytes CRC checksum

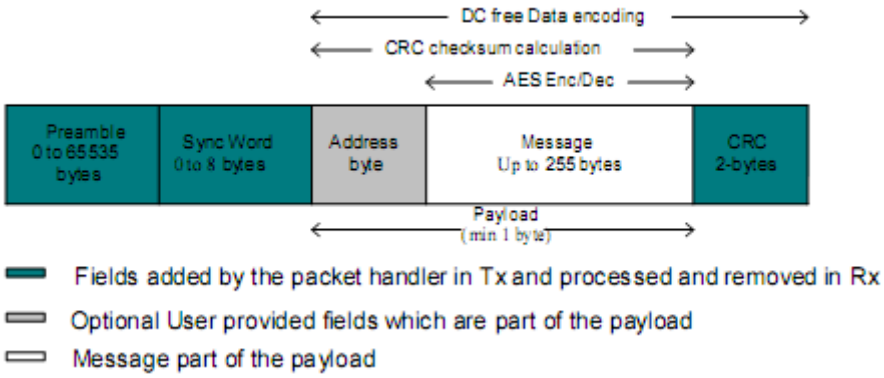

Figure 32. Fixed Length Packet Format

Variable Length Packet Format

Variable length packet format is selected when bit *PacketFormat* is set to 1.

This mode is useful in applications where the length of the packet is not known in advance and can vary over time. It is then necessary for the transmitter to send the length information together with each packet in order for the receiver to operate properly.

In this mode the length of the payload, indicated by the length byte, is given by the first byte of the FIFO and is limited to 255 bytes if AES is not enabled else the message is limited to 64 bytes (i.e. max 66 bytes payload if Address byte is enabled). Note that the length byte itself is not included in its calculation. In this mode, the payload must contain at least 2 bytes, i.e. length + address or message byte.

An illustration of a variable length packet is shown below. It contains the following fields:

- Preamble (1010...)
- Sync word (Network ID)
- Length byte
- Optional Address byte (Node ID)
- Message data
- Optional 2-bytes CRC checksum

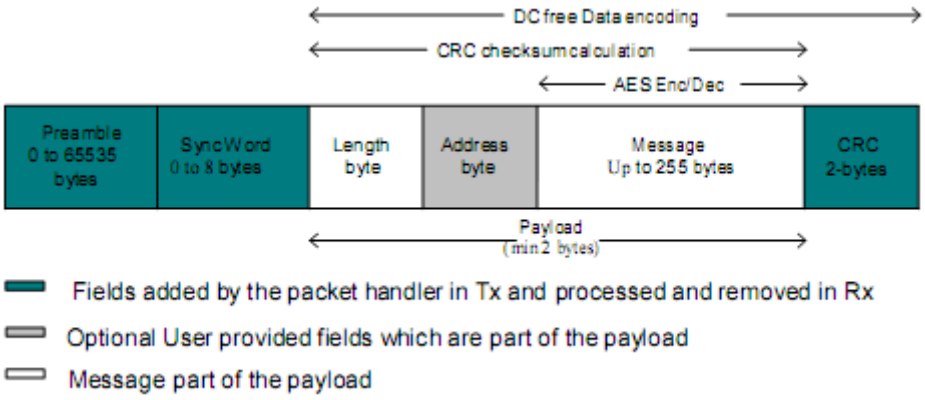

Figure 33. Variable Length Packet Format

Unlimited Length Packet Format

Unlimited length packet format is selected when bit *PacketFormat* is set to 0 and *PayloadLength* is set to 0.

The user can then transmit and receive packet of arbitrary length and PayloadLength register is not used in Tx/Rx modes for counting the length of the bytes transmitted/received. This mode is a replacement for the legacy buffered mode in RF63/RF64 transceivers.

In Tx the data is transmitted depending on the TxStartCondition bit. On the Rx side the data processing features like Address filtering, Manchester encoding and data whitening are not available if the sync pattern length is set to zero (SyncOn = 0). The filling of the FIFO in this case can be controlled by the bit FifoFillCondition. The CRC detection in Rx is also not supported in this mode of the packet handler, however CRC generation in Tx is operational. The interrupts like CrcOk & PayloadReady are not available either.

An unlimited length packet shown in is made up of the following fields:

- Preamble (1010...).
- Sync word (Network ID).
- Optional Address byte (Node ID).
- Message data
- Optional 2-bytes CRC checksum (Tx only)

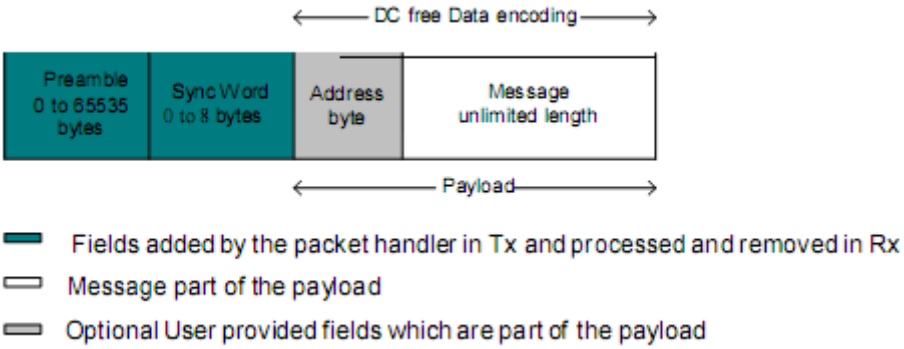

Figure 34. Unlimited Length Packet Format

5.5.3. Tx Processing (without AES)

In Tx mode the packet handler dynamically builds the packet by performing the following operations on the payload available in the FIFO:

- Add a programmable number of preamble bytes
- Add a programmable Sync word
- Optionally calculating CRC over complete payload field (optional length byte + optional address byte + message) andappending the 2 bytes checksum.
- Optional DC-free encoding of the data (Manchester or whitening)

Only the payload (including optional address and length fields) is required to be provided by the user in the FIFO.

The transmission of packet data is initiated by the Packet Handler only if the Moduleis in Tx mode and the transmission condition defined by *TxStartCondition* is fulfilled. If transmission condition is not fulfilled then the packet handler transmits a preamble sequence until the condition is met. This happens only if the preamble length /= 0, otherwise it transmits a zero or one until the condition is met to transmit the packet data.

The transmission condition itself is defined as:

- if *TxStartCondition* = 1, the packet handler waits until the first byte is written into the FIFO, then it starts sending the preamble followed by the sync word and user payload
- If TxStartCondition = 0, the packet handler waits until the number of bytes written in the FIFO is equal to the number defined in *RegFifoThresh* + 1
- If the condition for transmission was already fulfilled i.e. the FIFO was filled in Sleep/Stdby then the transmission of packet starts immediately on enabling Tx

5.5.4. Rx Processing (without AES)

In Rx mode the packet handler extracts the user payload to the FIFO by performing the following operations:

- Receiving the preamble and stripping it off
- Detecting the Sync word and stripping it off
- Optional DC-free decoding of data
- Optionally checking the address byte
- Optionally checking CRC and reflecting the result on *CrcOk.*

Only the payload (including optional address and length fields) is made available in the FIFO.

W hen the Rx mode is enabled the demodulator receives the preamble followed by the detection of sync word. If fixed length packet format is enabled then the number of bytes received as the payload is given by the *PayloadLength* parameter.
In variable length mode the first byte received after the sync word is interpreted as the length of the received packet. The internal length counter is initialized to this received length. The *PayloadLength* register is set to a value which is greater than the maximum expected length of the received packet. If the received length is greater than the maximum length stored in *PayloadLength* register the packet is discarded otherwise the complete packet is received.

If the address check is enabled then the second byte received in case of variable length and first byte in case of fixed length is the address byte. If the address matches to the one in the *NodeAddress* field, reception of the data continues otherwise it's stopped. The CRC check is performed if *CrcOn* = 1 and the result is available in *CrcOk* indicating that the CRC was successful. An interrupt (*PayloadReady*) is also generated on DIO0 as soon as the payload is available in the FIFO. The payload available in the FIFO can also be read in Sleep/Standby mode.
If the CRC fails the *PayloadReady* interrupt is not generated and the FIFO is cleared. This function can be overridden by setting *CrcAutoClearOff* = 1, forcing the availability of *PayloadReady* interrupt and the payload in the FIFO even if the CRC fails.

5.5.5. AES

AES is the symmetric-key block cipher that provides the cryptographic capabilities to the transceiver. The system proposed can work with 128-bit long fixed keys. The fixed key is stored in a 16-byte write only user configuration register, which retains its value in Sleep mode.

As shown in Figure 33 and Figure 34 above the message part of the Packet can be encrypted and decrypted with the cipher 128- cipher key stored in the configuration registers.

Tx Processing
User enters the data to be transmitted in FIFO in Stdby/Sleep mode and gives the transmit command.
On Tx command the Packet handler state machine takes over the control and If encryption is enabled then the message inside the FIFO is read in blocks of 16 bytes (padded with 0s if needed), encrypted and stored back to FIFO. All this processing is done in Tx mode before enabling the packet handling state machine. Only the Message part of the packet is encrypted and preamble, sync word, length byte, address byte and CRC are not encrypted.
Once the encryption is done the Packet handling state machine is enabled to transmit the data.

Rx Processing
The data received is stored in the FIFO, The address, CRC interrupts are generated as usual because these parameters were not encrypted.
Once the complete packet has been received. The data is read from the FIFO, decrypted and written back to FIFO. The *PayloadReady* interrupt is issued once the decrypted data is ready in the FIFO for reading via the SPI interface.

The AES encryption/decryption cannot be used on the fly i.e. while transmitting and receiving data. Thus when AES encryption/decryption is enabled, the FIFO acts as a simple buffer. This buffer is filled before initiating any transmission. The data in the buffer is then encrypted before the transmission can begin. On the receive side the decryption is initiated only once the complete packet has been received in the buffer.

The encryption/decryption process takes approximately 7.0 us per 16-byte block. Thus for a maximum of 4 blocks (i.e. 64 bytes) it can take up to 28 us for completing the cryptographic operations.

The receive side sees the AES decryption time as a sequential delay before the *PayloadReady* interrupt is available.

The Tx side sees the AES encryption time as a sequential delay in the startup of the Tx chain, thus the startup time of the Tx will increase according to the length of data.

In Fixed length mode the Message part of the payload that can be encrypted/decrypted can be 64 bytes long. If the address filtering is enabled, the length of the payload should be at max 65 bytes in this case.

In Variable length mode the Max message size that can be encrypted/decrypted is also 64 bytes when address filtering is disabled, else it is 48 bytes. Thus, including length byte, the length of the payload is max 65 or 50 bytes (the latter when address filtering is enabled).

If the address filtering is expected then *AddressFiltering* must be enabled on the transmitter side as well to prevent address byte to be encrypted.

Crc check being performed on encrypted data, *CrcOk* interrupt will occur "decryption time" before *PayloadReady* interrupt.

5.5.6. Handling Large Packets

When Payload length exceeds FIFO size (66 bytes) whether in fixed, variable or unlimited length packet format, in addition to PacketSent in Tx and PayloadReady or CrcOk in Rx, the FIFO interrupts/flags can be used as described below:

- For Tx:

FIFO can be prefilled in Sleep/Standby but must be refilled "on-the-fly" during Tx with the rest of the payload.

（1） Prefill FIFO (in Sleep/Standby first or directly in Tx mode) until FifoThreshold or FifoFull is set
（2） In Tx, wait for FifoThreshold or FifoNotEmpty to be cleared (i.e. FIFO is nearly empty)
（3） W rite bytes into the FIFO until FifoThreshold or FifoFull is set.
（4） Continue to step 2 until the entire message has been written to the FIFO (PacketSent will fire when the last bit of the packet has been sent).

- For Rx:

FIFO must be unfilled "on-the-fly" during Rx to prevent FIFO overrun.

（1） Start reading bytes from the FIFO when FifoNotEmpty or FifoThreshold becomes set.
（2） Suspend reading from the FIFO if FifoNotEmpty clears before all bytes of the message have been read
（3） Continue to step 1 until PayloadReady or CrcOk fires
（4） Read all remaining bytes from the FIFO either in Rx or Sleep/Standby mode

Note AES encryption is not feasible on large packets, since all Payload bytes need to be in the FIFO at the same time to perform encryption

5.5.7. Packet Filtering

LJ1269H 's packet handler offers several mechanisms for packet filtering, ensuring that only useful packets are made available to the uC, reducing significantly system power consumption and software complexity.

Sync Word Based

Sync word filtering/recognition is used for identifying the start of the payload and also for network identification. As previously described, the Sync word recognition block is configured (size, error tolerance, value) in *RegSyncValue* registers. This information is used, both for appending Sync word in Tx, and filtering packets in Rx.

Every received packet which does not start with this locally configured Sync word is automatically discarded and no interrupt is generated.

When the Sync word is detected, payload reception automatically starts and *SyncAddressMatch* is asserted.

Note Sync Word values containing 0x00 byte(s) are forbidden

Address Based

Address filtering can be enabled via the *AddressFiltering* bits. It adds another level of filtering, above Sync word (i.e. Sync must match first), typically useful in a multi-node networks where a network ID is shared between all nodes (Sync word) and each node has its own ID (address).

Two address based filtering options are available:

- *AddressFiltering = 01*: Received address field is compared with internal register *NodeAddress*. If they match then thepacket is accepted and processed, otherwise it is discarded.
- *AddressFiltering = 10: Received address field is compared with internal registers NodeAddress and BroadcastAddress.If either is a match, the received packet is accepted and processed, otherwise it is discarded. This additional check with a constant is useful for implementing broadcast in a multi-node networks*

Please note that the received address byte, as part of the payload, is not stripped off the packet and is made available in the FIFO. In addition, *NodeAddress* and *AddressFiltering* only apply to Rx. On Tx side, if address filtering is expected, the address byte should simply be put into the FIFO like any other byte of the payload.

As address filtering requires a Sync word match, both features share the same interrupt flag *SyncAddressMatch*.

Length Based

In variable length Packet mode, *PayloadLength* must be programmed with the maximum payload length permitted. If received length byte is smaller than this maximum then the packet is accepted and processed, otherwise it is discarded.

Please note that the received length byte, as part of the payload, is not stripped off the packet and is made available in the FIFO.

To disable this function the user should set the value of the *PayloadLength* to 255.

CRC Based

The CRC check is enabled by setting bit *CrcOn* in *RegPacketConfig1*. It is used for checking the integrity of the message.

- *On Tx side a two byte CRC checksum is calculated on the payload part of the packet and appended to the end of the message*
- *On Rx side the checksum is calculated on the received payload and compared with the two checksum bytes received.The result of the comparison is stored in bit CrcOk.*

By default, if the CRC check fails then the FIFO is automatically cleared and no interrupt is generated. This filtering function can be disabled via *CrcAutoClearOff* bit and in this case, even if CRC fails, the FIFO is not cleared and only *PayloadReady* interrupt goes high. Please note that in both cases, the two CRC checksum bytes are stripped off by the packet handler and only the payload is made available in the FIFO.

The CRC is based on the CCITT polynomial as shown below. This implementation also detects errors due to leading and trailing zeros.

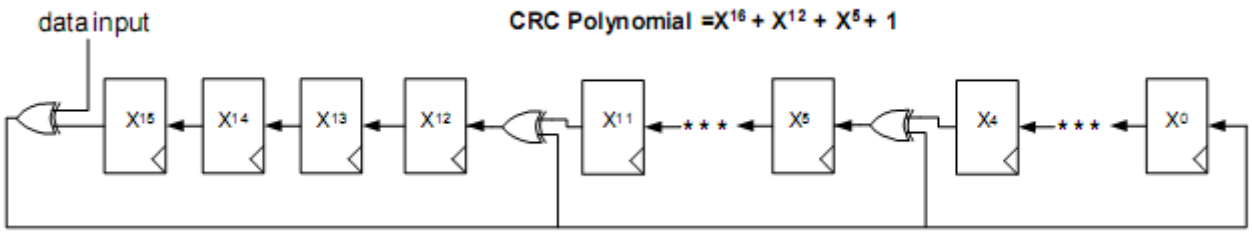

Figure 35. CRC Implementation

5.5.8. DC-Free Data Mechanisms

The payload to be transmitted may contain long sequences of 1's and 0's, which introduces a DC bias in the transmitted signal. The radio signal thus produced has a non uniform power distribution over the occupied channel bandwidth. It also introduces data dependencies in the normal operation of the demodulator. Thus it is useful if the transmitted data is random and DC free.

For such purposes, two techniques are made available in the packet handler: Manchester encoding and data whitening.

Note Only one of the two methods should be enabled at a time.

Manchester Encoding
Manchester encoding/decoding is enabled if *DcFree = 01* and can only be used in Packet mode.

The NRZ data is converted to Manchester code by coding '1' as "10" and '0' as "01".

In this case, the maximum chip rate is the maximum bit rate given in the specifications section and the actual bit rate is half the chip rate.
Manchester encoding and decoding is only applied to the payload and CRC checksum while preamble and Sync word are kept NRZ. However, the chip rate from preamble to CRC is the same and defined by *BitRate* in *RegBitRate* (Chip Rate = Bit Rate NRZ = 2 x Bit Rate Manchester).

Manchester encoding/decoding is thus made transparent for the user, who still provides/retrieves NRZ data to/from the FIFO

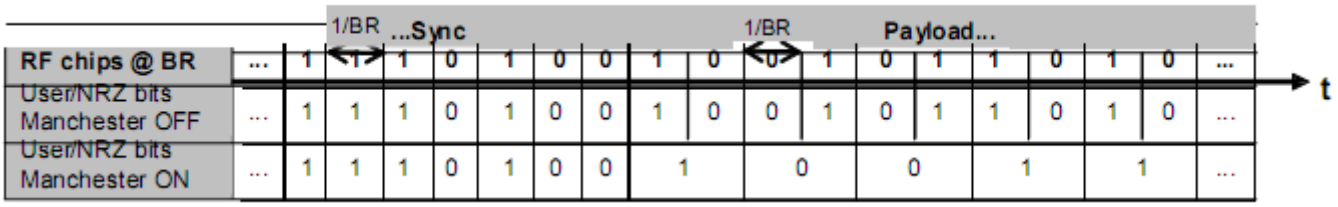

Figure 36. Manchester Encoding/Decoding

Data Whitening

Another technique called whitening or scrambling is widely used for randomizing the user data before radio transmission. The data is whitened using a random sequence on the Tx side and de-whitened on the Rx side using the same sequence. Comparing to Manchester technique it has the advantage of keeping NRZ data rate i.e. actual bit rate is not halved.

The whitening/de-whitening process is enabled if *DcFree = 10*. A 9-bit LFSR is used to generate a random sequence. The payload and 2-byte CRC checksum is then XORed with this random sequence as shown below. The data is de-whitened on the receiver side by XORing with the same random sequence.

Payload whitening/de-whitening is thus made transparent for the user, who still provides/retrieves NRZ data to/from the FIFO.

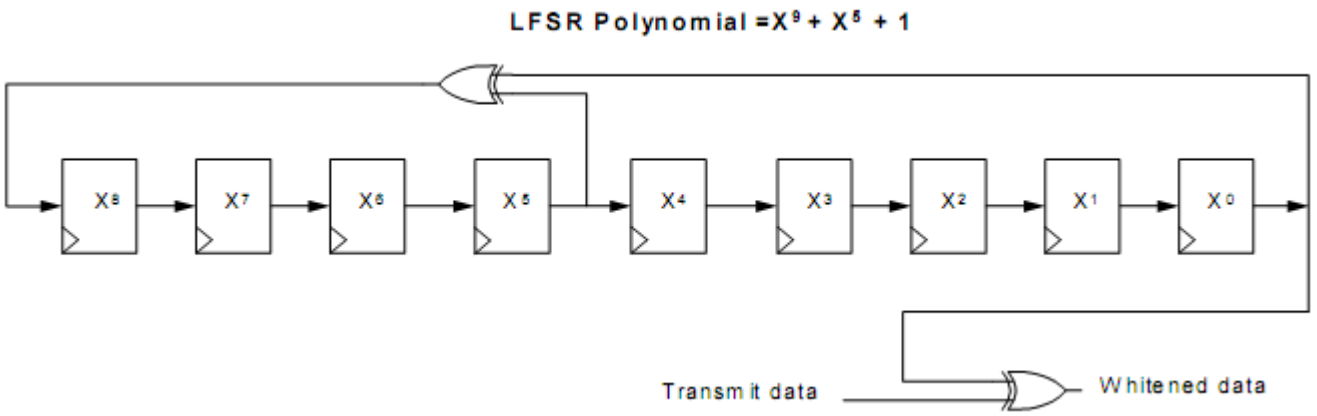

Figure 37. Data Whitening

6. Configuration and Status Registers

6.1. General Description

Table 23 Registers Summary

Address	Register Name	Reset (built-in)	Default (recommended)	Description
0x00	RegFifo	0x00		FIFO read/write access
0x01	RegOpMode	0x04		Operating modes of the transceiver
0x02	RegDataModul	0x00		Data operation mode and Modulation settings
0x03	RegBitrateMsb	0x1A		Bit Rate setting, Most Significant Bits
0x04	RegBitrateLsb	0x0B		Bit Rate setting, Least Significant Bits
0x05	RegFdevMsb	0x00		Frequency Deviation setting, Most Significant Bits
0x06	RegFdevLsb	0x52		Frequency Deviation setting, Least Significant Bits
0x07	RegFrfMsb	0xE4		RF Carrier Frequency, Most Significant Bits
0x08	RegFrfMid	0xC0		RF Carrier Frequency, Intermediate Bits
0x09	RegFrfLsb	0x00		RF Carrier Frequency, Least Significant Bits
0x0A	RegOsc1	0x41		RC Oscillators Settings
0x0B	RegAfcCtrl	0x00		AFC control in low modulation index situations
0x0C	Reserved0C	0x02		-
0x0D	RegListen1	0x92		Listen Mode settings
0x0E	RegListen2	0xF5		Listen Mode Idle duration
0x0F	RegListen3	0x20		Listen Mode Rx duration
0x010	RegVersion	0x24		
0x011	RegPaLevel	0x9F		PA selection and Output Power control
0x012	RegPaRamp	0x09		Control of the PA ramp time in FSK mode
0x013	RegOcp	0x1A		Over Current Protection control
0x014	Reserved14	0x40		-
0x015	Reserved15	0xB0		-
0x016	Reserved16	0x7B		-
0x017	Reserved17	0x9B		-
0x018	RegLna	0x08	0x88	LNA settings
0x019	RegRxBw	0x86	0x55	Channel Filter BW Control

Address	Register Name	Reset (built-in)	Default (recommended)	Description
0x1A	RegAfcBw	0x8A	0x8B	Channel Filter BW control during the AFC routine
0x1B	RegOokPeak	0x40		OOK demodulator selection and control in peak mode
0x1C	RegOokAvg	0x80		Average threshold control of the OOK demodulator
0x1D	RegOokFix	0x06		Fixed threshold control of the OOK demodulator
0x1E	RegAfcFei	0x10		AFC and FEI control and status
0x1F	RegAfcMsb	0x00		MSB of the frequency correction of the AFC
0x20	RegAfcLsb	0x00		LSB of the frequency correction of the AFC
0x21	RegFeiMsb	0x00		MSB of the calculated frequency error
0x22	RegFeiLsb	0x00		LSB of the calculated frequency error
0x23	RegRssiConfig	0x02		RSSI-related settings
0x24	RegRssiValue	0xFF		RSSI value in dBm
0x25	RegDioMapping1	0x00		Mapping of pins DIO0 to DIO3
0x26	RegDioMapping2	0x05	0x07	Mapping of pins DIO4 and DIO5, ClkOut frequency
0x27	RegIrqFlags1	0x80		Status register: PLL Lock state, Timeout, RSSI > Threshold...
0x28	RegIrqFlags2	0x00		Status register: FIFO handling flags...
0x29	RegRssiThresh	0xFF	0xE4	RSSI Threshold control
0x2A	RegRxTimeout1	0x00		Timeout duration between Rx request and RSSI detection
0x2B	RegRxTimeout2	0x00		Timeout duration between RSSI detection and PayloadReady
0x2C	RegPreambleMsb	0x00		Preamble length, MSB
0x2D	RegPreambleLsb	0x03		Preamble length, LSB
0x2E	RegSyncConfig	0x98		Sync Word Recognition control
0x2F-0x36	RegSyncValue1-8	0x00	0x01	Sync Word bytes, 1 through 8
0x37	RegPacketConfig1	0x10		Packet mode settings
0x38	RegPayloadLength	0x40		Payload length setting
0x39	RegNodeAdrs	0x00		Node address
0x3A	RegBroadcastAdrs	0x00		Broadcast address
0x3B	RegAutoModes	0x00		Auto modes settings
0x3C	RegFifoThresh	0x0F	0x0F	Fifo threshold, Tx start condition
0x3D	RegPacketConfig2	0x02		Packet mode settings

Address	Register Name	Reset (built-in)	Default (recommended)	Description
0x3E-0x4D	RegAesKey1-16	0x00		16 bytes of the cypher key
0x4E	RegTemp1	0x01		Temperature Sensor control
0x4F	RegTemp2	0x00		Temperature readout
0x58	RegTestLna	0x1B		Sensitivity boost
0x5A	RegTestPa1	0x55		High Power PA settings
0x5C	RegTestPa2	0x70		High Power PA settings
0x6F	RegTestDagc	0x00	0x30	Fading Margin Improvement
0x71	RegTestAfc	0x00		AFC offset for low modulation index AFC
0x50 +	RegTest			Internal test registers

Note - Reset values are automatically refreshed in the chip at Power On Reset

- Default values are recommended register values, optimizing the device operation

*- Registers for which the Default value differs from the Reset value are denoted by a * in the tables of section 6*

6.2. Common Configuration Registers

Table 24 Common Configuration Registers

Name (Address)	Bits	Variable Name	Mode	Default Value	Description
RegFifo (0x00)	7-0	Fifo	rw	0x00	FIFO data input/output
RegOpMode (0x01)	7	SequencerOff	rw	0	Controls the automatic Sequencer (see section 4.2): 0 → Operating mode as selected with Mode bits in RegOpMode is automatically reached with the Sequence 1 → Mode is forced by the user
	6	ListenOn	rw	0	Enables Listen mode, should be enabled whilst in Standby mode: 0 → Off (see section 4.3) 1 → On
	5	ListenAbort	w	0	Aborts Listen mode when set together with ListenOn=0 See section 4.3.4 for details Always reads 0.
	4-2	Mode	rw	001	Transceiver"s operating modes: 000 → Sleep mode (SLEEP) 001 → Standby mode (STDBY) 010 → Frequency Synthesizer mode (FS) 011 → Transmitter mode (TX) 100 → Receiver mode (RX) others → reserved; Reads the value corresponding to the current Modulemode
	1-0	-	r	00	unused
RegDataModul (0x02)	7	-	r	0	unused
	6-5	DataMode	rw	00	Data processing mode: 00 → Packet mode 01 → reserved 10 → Continuous mode with bit synchronizer 11 → Continuous mode without bit synchronizer
	4-3	ModulationType	rw	00	Modulation scheme: 00 → FSK 01 → OOK 10 - 11 → reserved
	2	-	r	0	unused
	1-0	ModulationShaping	rw	00	Data shaping: in FSK: 00 → no shaping 01 → Gaussian filter, BT = 1.0 10 → Gaussian filter, BT = 0.5 11 → Gaussian filter, BT = 0.3 in OOK: 00 → no shaping 01 → filtering with fcutoff = BR 10→ filtering with fcutoff = 2*BR 11 → reserved
RegBitrateMsb (0x03)	7-0	BitRate(15:8)	rw	0x1a	MSB of Bit Rate (Chip Rate when Manchester encoding is enabled)

RegBitrateLsb (0x04)	7-0	BitRate(7:0)	rw	0x0b	LSB of Bit Rate (Chip Rate if Manchester encoding is enabled) $BitRate = \frac{FXO\ SC}{BitRate\ (15,0)}$ Default value: 4.8 kb/s
RegFdevMsb (0x05)	7-6	-		00	unused
	5-0	Fdev(13:8)	rw	000000	MSB of the frequency deviation
RegFdevLsb (0x06)	7-0	Fdev(7:0)	rw	0x52	LSB of the frequency deviation $Fdev = Fstep \cdot Fdev(15,0)$ Default value: 5 kHz
RegFrfMsb (0x07)	7-0	Frf(23:16)	rw	0xe4	MSB of the RF carrier frequency
RegFrfMid (0x08)	7-0	Frf(15:8)	rw	0xc0	Middle byte of the RF carrier frequency
RegFrfLsb (0x09)	7-0	Frf(7:0)	rw	0x00	LSB of the RF carrier frequency Frf = F ste p × F r f□□ 23 ;0 □□ Default value: Frf = 915 MHz (32 MHz XO)
RegOsc1 (0x0A)	7	RcCalStart	w	0	Triggers the calibration of the RC oscillator when set. Always reads 0. RC calibration must be triggered in Standby mode.
	6	RcCalDone	r	1	0 → RC calibration in progress 1 → RC calibration is over
	5-0	-	r	000001	unused
RegAfcCtrl (0x0B)	7-6	-	r	00	unused
	5	AfcLowBetaOn	rw	0	Improved AFC routine for signals with modulation index lower than 2. Refer to section 3.4.16 for details 0 → Standard AFC routine 1 → Improved AFC routine
	4-0	-	r	00000	unused
Reserved0C (0x0C)	7-0	-	r	0x02	unused

RegListen1 (0x0D)	7-6	ListenResolIdle	rw	10	Resolution of Listen mode Idle time (calibrated RC osc): 00 → reserved 01 → 64 us 10 → 4.1 ms 11 → 262 ms
	5-4	ListenResolRx	rw	01	Resolution of Listen mode Rx time (calibrated RC osc): 00 → reserved 01 → 64 us 10 → 4.1 ms 11 → 262 ms
	3	ListenCriteria	rw	0	Criteria for packet acceptance in Listen mode: 0 → signal strength is above *RssiThreshold* 1 → signal strength is above *RssiThreshold* and *SyncAddress matched*
	2-1	ListenEnd	rw	01	Action taken after acceptance of a packet in Listen mode: 00 → chip stays in Rx mode. Listen mode stops and must be disabled (see section 4.3). 01 → chip stays in Rx mode until *PayloadReady* or *Timeout* interrupt occurs. It then goes to the mode defined by *Mode*. Listen mode stops and must be disabled (see section 4.3). 10 → chip stays in Rx mode until *PayloadReady* or *Timeout interrupt occurs. Listen mode then resumes in* Idle state. FIFO content is lost at next Rx wakeup. 11 → Reserved
	0	-	r	0	unused
RegListen2 (0x0E)	7-0	ListenCoefIdle	rw	0xf5	Duration of the Idle phase in Listen mode. $t\ ListenIdle = ListenCoefIdle * ListenResolIdle$
RegListen3 (0x0F)	7-0	ListenCoefRx	rw	0x20	Duration of the Rx phase in Listen mode (startup time included, see section 4.2.3) $t\ ListenRx = ListenCoefRx * ListenResolRx$
RegVersion (0x10)	7-0	Version	r	0x24	Version code of the chip. Bits 7-4 give the full revisio number; bits 3-0 give the metal mask revision number.

6.3. Transmitter Registers

Table 25 Transmitter Registers

Name (Address)	Bits	Variable Name	Mode	Default Value	Description
RegPaLevel (0x11)	7	Pa0On *	rw	1	Enables PA0, connected to RFIO and LNA Enables PA0, connected to RFIO and LNA
	6	Pa1On *	rw	0	Enables PA1, on PA_BOOST pin
	5	Pa2On *	rw	0	Enables PA2, on PA_BOOST pin
	4-0	OutputPower	rw	11111	Output power setting, with 1 dB steps Pout = -18 + OutputPower [dBm] , with PA0 Pout = -18 + OutputPower [dBm] , with PA1** Pout = -14+ OutputPower [dBm] , with PA1 and PA2** Pout = -11 + OutputPower [dBm] , with PA1 and PA2, and high Power PA settings (refer to section 3.3.7)**
RegPaRamp (0x12)	7-4	-	r	0000	unused
	3-0	PaRamp	rw	1001	Rise/Fall time of ramp up/down in FSK 0000 → 3.4 ms 0001 → 2 ms 0010 → 1 ms 0011 → 500 us 0100 → 250 us 0101 → 125 us 0110 → 100 us 0111 → 62 us 1000 → 50 us 1001 → 40 us 1010 → 31 us 1011 → 25 us 1100 → 20 us 1101 → 15 us 1110 → 12 us 1111 → 10 us
RegOcp (0x13)	7-5	-	r	000	unused
	4	OcpOn	rw	1	Enables overload current protection (OCP) for the PA: 0 → OCP disabled 1 → OCP enabled
	3-0	OcpTrim	rw	1010	Trimming of OCP current: Ima x = 45 + 5 · OcpTrim□ mA □ 95 mA OCP by default

Note **Power Amplifier truth table is available in Table 10*

*** Only the16 upper values of OutputPower are accessible*

6.4. Receiver Registers

Table 26 Receiver Registers

Name (Address)	Bits	Variable Name	Mode	Default Value	Description
Reserved14 (0x14)	7-0	-	r	0x40	unused
Reserved15 (0x15)	7-0	-	r	0xB0	unused
Reserved16 (0x16)	7-0	-	r	0x7B	unused
Reserved17 (0x17)	7-0	-	r	0x9B	unused
RegLna (0x18)	7	LnaZin	rw	1 *	LNA"s input impedance 0 → 50 ohms 1 → 200 ohms
	6	-	r	0	unused
	5-3	LnaCurrentGain	r	001	Current LNA gain, set either manually, or by the AGC
	2-0	LnaGainSelect	rw	100	LNA gain setting: 000 → gain set by the internal AGC loop 001 → G1 = highest gain 010 → G2 = highest gain – 6 dB 011 → G3 = highest gain – 12 dB 100 → G4 = highest gain – 24 dB 101 → G5 = highest gain – 36 dB 101 → G5 = highest gain – 36 dB 111 → reserved
RegRxBw (0x19)	7-5	DccFreq	rw	010 *	Cut-off frequency of the DC offset canceller (DCC): $fc = \frac{4RxBw}{2\pi \times 2^{DccFreq\ +2}}$ ~4% of the RxBw by default
	4-3	RxBwMant	rw	10 *	Channel filter bandwidth control: 00 → RxBwMant = 16 10 → RxBwMant = 24 01 → RxBwMant = 20 11 → reserved
	2-0	RxBwExp	rw	101 *	Channel filter bandwidth control: FSK Mode: $RxBw = \frac{FXOSC}{RxBwMant\ \times 2^{RxBwExp\ +2}}$ OOK Mode: $RxBw = \frac{FXOSC}{RxBwMant\ \times 2^{RxBwExp\ +3}}$ See Table 14 for tabulated values
RegAfcBw (0x1A)	7-5	DccFreqAfc	rw	100	DccFreq parameter used during the AFC
	4-3	RxBwMantAfc	rw	01	RxBwMant parameter used during the AFC
	2-0	RxBwExpAfc	rw	011*	RxBwExp parameter used during the AFC

RegOokPeak (0x1B)	7-6	OokThreshType	rw	01	Selects type of threshold in the OOK data slicer: 00 → fixed 10 → average 01 → peak 11 → reserved
	5-3	OokPeakTheshStep	rw	000	Size of each decrement of the RSSI threshold in the OOK demodulator: 000 → 0.5 dB 001 → 1.0 dB 010 → 1.5 dB 011 → 2.0 dB 100 → 3.0 dB 101 → 4.0 dB 110 → 5.0 dB 111 → 6.0 dB
	2-0	OokPeakThreshDec	rw	000	Period of decrement of the RSSI threshold in the OOK demodulator: 000 → once per chip 001 → once every 2 chips 010 → once every 4 chips 011 → once every 8 chips 100 → twice in each chip 101 → 4 times in each chip 110 → 8 times in each chip 111 → 16 times in each chip
RegOokAvg (0x1C)	7-6	OokAverageThreshFilt	rw	10	Filter coefficients in average mode of the OOK demodulator: 00 → fC ≈ chip rate / 32.π 01 → fC ≈ chip rate / 8.π 10 → fC ≈ chip rate / 4.π 11 →fC ≈ chip rate / 2.π
	5-0	-	r	000000	unused
RegOokFix (0x1D)	7-0	OokFixedThresh	rw	0110 (6dB)	Fixed threshold value (in dB) in the OOK demodulator. Used when OokThresType = 00
RegAfcFei (0x1E)	7	-	r	0	unused
	6	FeiDone	r	0	0 → FEI is on-going 1 → FEI finished
	5	FeiStart	w	0	Triggers a FEI measurement when set. Always reads 0.
	4	AfcDone	r	1	0 → AFC is on-going 1 → AFC has finished
	3	AfcAutoclearOn	rw	0	Only valid if AfcAutoOn is set 0 → AFC register is not cleared before a new AFC phase 1 → AFC register is cleared before a new AFC phase
	2	AfcAutoOn	rw	0	0 → AFC is performed each time AfcStart is set 1 → AFC is performed each time Rx mode is entered
	1	AfcClear	w	0	Clears the AfcValue if set in Rx mode. Always reads 0
	0	AfcStart	w	0	Triggers an AFC when set. Always reads 0.
RegAfcMsb (0x1F)	7-0	AfcValue(15:8)	r	0x00	MSB of the AfcValue, 2"s complement format
RegAfcLsb (0x20)	7-0	AfcValue(7:0)	r	0x00	LSB of the AfcValue, 2"s complement format Frequency correction = AfcValue x Fstep
RegFeiMsb (0x21)	7-0	FeiValue(15:8)	r	-	MSB of the measured frequency offset, 2"s complement
RegFeiLsb (0x22)	7-0	FeiValue(7:0)	r	-	LSB of the measured frequency offset, 2"s complement Frequency error = FeiValue x Fstep
RegRssiConfig (0x23)	7-2	-	r	000000	unused
	1	RssiDone	r	1	0 → RSSI is on-going 1 → RSSI sampling is finished, result available
	0	RssiStart	w	0	Trigger a RSSI measurement when set. Always reads 0.
RegRssiValue (0x24)	7-0	RssiValue	r	0xFF	Absolute value of the RSSI in dBm, 0.5dB steps. RSSI = -RssiValue/2 [dBm]

6.5. IRQ and Pin Mapping Registers

Table 27 IRQ and Pin Mapping Registers

Name(Address)	Bits	Variable Name	Mode	Default Value	Description
RegDioMapping1 (0x25)	7-6	Dio0Mapping	rw	00	Mapping of pins DIO0 to DIO5 See Table 21 for mapping in Continuous mode See Table 22 for mapping in Packet mode
	5-4	Dio1Mapping	rw	00	
	3-2	Dio2Mapping	rw	00	
	1-0	Dio3Mapping	rw	00	
RegDioMapping2 (0x26)	7-6	Dio4Mapping	rw	00	
	5-4	Dio5Mapping	rw	00	
	3	-	r	0	unused
	2-0	ClkOut	rw	111 *	Selects CLKOUT frequency: 000 → FXOSC 001 → FXOSC / 2 010 → FXOSC / 4 011 → FXOSC / 8 100 → FXOSC / 16 101 → FXOSC / 32 110 → RC (automatically enabled) 111 → OFF
RegIrqFlags1 (0x27)	7	ModeReady	r	1	Set when the operation mode requested in *Mode*, is ready - Sleep: Entering Sleep mode - Standby: XO is running- Standby: XO is running - FS: PLL is locked - Rx: RSSI sampling starts - Tx: PA ramp-up completed Cleared when changing operating mode.
	6	RxReady	r	0	Set in Rx mode, after RSSI, AGC and AFC. Cleared when leaving Rx.
	5	TxReady	r	0	Set in Tx mode, after PA ramp-up. Cleared when leaving Tx.
	4	PllLock	r	0	Set (in FS, Rx or Tx) when the PLL is locked. Cleared when it is not.
	3	Rssi	rwc	0	Set in Rx when the *RssiValue* exceeds *RssiThreshold.* Cleared when leaving Rx.
	2	Timeout	r	0	Set when a timeout occurs (see *TimeoutRxStart* and *TimeoutRssiThresh*) Cleared when leaving Rx or FIFO is emptied.
	1	AutoMode	r	0	Set when entering Intermediate mode. Cleared when exiting Intermediate mode. Please note that in Sleep mode a small delay can be observed between *AutoMode* interrupt and the corresponding enter/exit condition.
	0	SyncAddressMatch	r/rwc	0	Set when Sync and Address (if enabled) are detected. Cleared when leaving Rx or FIFO is emptied. This bit is read only in Packet mode, rwc in Continuous mode

RegIrqFlags2 (0x28)	7	FifoFull	r	0	Set when FIFO is full (i.e. contains 66 bytes), else cleared.
	6	FifoNotEmpty	r	0	Set when FIFO contains at least one byte, else cleared
	5	FifoLevel	r	0	Set when the number of bytes in the FIFO strictly exceeds FifoThreshold, else cleared.
	4	FifoOverrun	rwc	0	Set when FIFO overrun occurs. (except in Sleep mode) Flag(s) and FIFO are cleared when this bit is set. The FIFO then becomes immediately available for the next transmission / reception.
	3	PacketSent	r	0	Set in Tx when the complete packet has been sent. Cleared when exiting Tx.
	2	PayloadReady	r	0	Set in Rx when the payload is ready (i.e. last byte received and CRC, if enabled and CrcAutoClearOff is cleared, is Ok). Cleared when FIFO is empty.
	1	CrcOk	r	0	Set in Rx when the CRC of the payload is Ok. Cleared when FIFO is empty.
	0	-	r	0	unused
RegRssiThresh (0x29)	7-0	RssiThreshold	rw	0xE4 *	RSSI trigger level for Rssi interrupt : - RssiThreshold / 2 [dBm]
RegRxTimeout1 (0x2A)	7-0	TimeoutRxStart	rw	0x00	Timeout interrupt is generated TimeoutRxStart*16*Tbit after switching to Rx mode if Rssi interrupt doesn"t occur (i.e. RssiValue > RssiThreshold) 0x00: TimeoutRxStart is disabled
RegRxTimeout2 (0x2B)	7-0	TimeoutRssiThresh	rw	0x00	Timeout interrupt is generated TimeoutRssiThresh*16*Tbit after Rssi interrupt if PayloadReady interrupt doesn"t occur. 0x00: TimeoutRssiThresh is disabled

6.6. Packet Engine Registers

Table 28 Packet Engine Registers

Name (Address)	Bits	Variable Name	Mode	Default Value	Description
RegPreambleMsb (0x2c)	7-0	PreambleSize(15:8)	rw	0x00	Size of the preamble to be sent (from TxStartCondition fulfilled). (MSB byte)
RegPreambleLsb (0x2d)	7-0	PreambleSize(7:0)	rw	0x03	Size of the preamble to be sent (from TxStartCondition fulfilled). (LSB byte)
RegSyncConfig (0x2e)	7	SyncOn	rw	1	Enables the Sync word generation and detection: 0 → Off 1 → On
	6	FifoFillCondition	rw	0	FIFO filling condition: 0 → if SyncAddress interrupt occurs 1 → as long as FifoFillCondition is set
	5-3	SyncSize	rw	011	Size of the Sync word: (SyncSize + 1) bytes
	2-0	SyncTol	rw	000	Number of tolerated bit errors in Sync word
RegSyncValue1 (0x2f)	7-0	SyncValue(63:56)	rw	0x01 *	1st byte of Sync word. (MSB byte) Used if SyncOn is set.
RegSyncValue2 (0x30)	7-0	SyncValue(55:48)	rw	0x01 *	2nd byte of Sync word Used if SyncOn is set and (SyncSize +1) >= 2.
RegSyncValue3 (0x31)	7-0	SyncValue(47:40)	rw	0x01 *	3rd byte of Sync word. Used if SyncOn is set and (SyncSize +1) >= 3.
RegSyncValue4 (0x32)	7-0	SyncValue(39:32)	rw	0x01 *	4th byte of Sync word. Used if SyncOn is set and (SyncSize +1) >= 4.
RegSyncValue5 (0x33)	7-0	SyncValue(31:24)	rw	0x01 *	5th byte of Sync word. Used if SyncOn is set and (SyncSize +1) >= 5.
RegSyncValue6 (0x34)	7-0	SyncValue(23:16)	rw	0x01 *	6th byte of Sync word. Used if SyncOn is set and (SyncSize +1) >= 6.
RegSyncValue7 (0x35)	7-0	SyncValue(15:8)	rw	0x01 *	7th byte of Sync word. Used if SyncOn is set and (SyncSize +1) >= 7.
RegSyncValue8 (0x36)	7-0	SyncValue(7:0)	rw	0x01 *	8th byte of Sync word. Used if SyncOn is set and (SyncSize +1) = 8.

RegPacketConfig1 (0x37)	7	PacketFormat	rw	0	Defines the packet format used: 0 → Fixed length 1 → Variable length
	6-5	DcFree	rw	00	Defines DC-free encoding/decoding performed: 00 → None (Off) 01 → Manchester 10 → W hitening 11 → reserved
	4	CrcOn	rw	1	Enables CRC calculation/check (Tx/Rx): 0 → Off 1 → On
	3	CrcAutoClearOff	rw	0	Defines the behavior of the packet handler when CRC check fails: 0 → Clear FIFO and restart new packet reception. No PayloadReady interrupt issued. 1 → Do not clear FIFO. PayloadReady interrupt issued.
	2-1	AddressFiltering	rw	00	Defines address based filtering in Rx: 00 → None (Off) 01 → Address field must match NodeAddress 10 → Address field must match NodeAddress or BroadcastAddress 11 → reserved
	0	-	rw	0	unused
RegPayloadLength (0x38)	7-0	PayloadLength	rw	0x40	If PacketFormat = 0 (fixed), payload length. If PacketFormat = 1 (variable), max length in Rx, not used in Tx.
RegNodeAdrs (0x39)	7-0	NodeAddress	rw	0x00	Node address used in address filtering.
RegBroadcastAdrs (0x3A)	7-0	BroadcastAddre ss	rw	0x00	Broadcast address used in address filtering.
RegAutoModes (0x3B)	7-5	EnterCondition	rw	0x00	Interrupt condition for entering the intermediate mode: 000 → None (AutoModes Off) 001 → Rising edge of FifoNotEmpty 010 → Rising edge of FifoLevel 011 → Rising edge of CrcOk 100 → Rising edge of PayloadReady 101 → Rising edge of SyncAddress 110 → Rising edge of PacketSent 111 → Falling edge of FifoNotEmpty (i.e. FIFO empty)
	4-2	ExitCondition	rw	0x00	Interrupt condition for exiting the intermediate mode: 000 → None (AutoModes Off) 001 → Falling edge of FifoNotEmpty (i.e. FIFO empty) 010 → Rising edge of FifoLevel or Timeout 011 → Rising edge of CrcOk or Timeout 100 → Rising edge of PayloadReady or Timeout 101 → Rising edge of SyncAddress or Timeout 110 → Rising edge of PacketSent 111 → Rising edge of Timeout
	1-0	IntermediateMod e	rw	00	Intermediate mode: 00 → Sleep mode (SLEEP) 01 → Standby mode (STDBY) 10 → Receiver mode (RX) 11 → Transmitter mode (TX)

RegFifoThresh (0x3C)	7	TxStartCondition	rw	1 *	Defines the condition to start packet transmission : 0 → FifoLevel (i.e. the number of bytes in the FIFO exceeds FifoThreshold) 1 → FifoNotEmpty (i.e. at least one byte in the FIFO)
	6-0	FifoThreshold	rw	000111	Used to trigger FifoLevel interrupt.
RegPacketConfig2 (0x3D)	7-4	InterPacketRxDelay	rw	0000	After PayloadReady occurred, defines the delay between FIFO empty and the start of a new RSSI phase for next packet. Must match the transmitter"s PA ramp-down time. - Tdelay = 0 if InterpacketRxDelay >= 12 - Tdelay = (2InterpacketRxDelay) / BitRate otherwise
	3	-	rw	0	unused
	2	RestartRx	w	0	Forces the Receiver in WAIT mode, in Continuous Rx mode. Always reads 0.
	1	AutoRxRestartOn	rw	1	Enables automatic Rx restart (RSSI phase) after PayloadReady occurred and packet has been completely read from FIFO: 0 → Off. RestartRx can be used. 1 → On. Rx automatically restarted after InterPacketRxDelay.
	0	AesOn	rw	0	Enable the AES encryption/decryption: 0 → Off 1 → On (payload limited to 66 bytes maximum)
RegAesKey1 (0x3E)	7-0	AesKey(127:120)	w	0x00	1st byte of cipher key (MSB byte)
RegAesKey2 (0x3F) RegAesKey2 (0x3F)	7-0	AesKey(119:112)	w	0x00	2nd byte of cipher key
RegAesKey3 (0x40)	7-0	AesKey(111:104)	w	0x00	3rd byte of cipher key
RegAesKey4 (0x41)	7-0	AesKey(103:96)	w	0x00	4th byte of cipher key
RegAesKey5 (0x42)	7-0	AesKey(95:88)	w	0x00	5th byte of cipher key
RegAesKey6 (0x43)	7-0	AesKey(87:80)	w	0x00	6th byte of cipher key
RegAesKey7 (0x44)	7-0	AesKey(79:72)	w	0x00	7th byte of cipher key
RegAesKey8 (0x45)	7-0	AesKey(71:64)	w	0x00	8th byte of cipher key
RegAesKey9 (0x46)	7-0	AesKey(63:56)	w	0x00	9th byte of cipher key
RegAesKey10 (0x47)	7-0	AesKey(55:48)	w	0x00	10th byte of cipher key
RegAesKey11 (0x48)	7-0	AesKey(47:40)	w	0x00	11th byte of cipher key
RegAesKey12 (0x49)	7-0	AesKey(39:32)	w	0x00	12th byte of cipher key
RegAesKey13 (0x4A)	7-0	AesKey(31:24)	w	0x00	13th byte of cipher key

RegAesKey14 (0x4B)	7-0	AesKey(23:16)	w	0x00	14th byte of cipher key
RegAesKey15 (0x4C)	7-0	AesKey(15:8)	w	0x00	15th byte of cipher key
RegAesKey16 (0x4D)	7-0	AesKey(7:0)	w	0x00	16th byte of cipher key (LSB byte)

6.7. Temperature Sensor Registers

Table 29 Temperature Sensor Registers

Name (Address)	Bits	Variable Name	Mode	Default Value	Description
RegTemp1 (0x4E)	7-4	-	r	0000	unused
	3	TempMeasStart	w	0	Triggers the temperature measurement when set. Always reads 0.
	2	TempMeasRunning	r	0	Set to 1 while the temperature measurement is running. Toggles back to 0 when the measurement has completed. The receiver can not be used while measuring temperature
	1-0	-	r	01	unused
RegTemp2 (0x4F)	7-0	TempValue	r	-	Measured temperature -1°C per Lsb Needs calibration for accuracy

6.8. Test Registers

Table 30 Test Registers

Name (Address)	Bits	Variable Name	Mode	Default Value	Description
RegTestLna (0x58)	7-0	SensitivityBoost	rw	0x1B	High sensitivity or normal sensitivity mode: 0x1B → Normal mode 0x2D → High sensitivity mode
RegTestPa1 (0x5A) RegTestPa1 (0x5A)	7-0	Pa20dBm1	rw	0x55	Set to 0x5D for +20 dBm operation on PA_BOOST. 0x55 → Normal mode and Rx mode 0x5D → +20 dBm mode Revert to 0x55 when receiving or using PA0
RegTestPa2 (0x5C)	7-0	Pa20dBm2	rw	0x70	Set to 0x7C for +20 dBm operation on PA_BOOST 0x70 → Normal mode and Rx mode 0x7C → +20 dBm mode Revert to 0x70 when receiving or using PA0
RegTestDagc (0x6F)	7-0	ContinuousDagc	rw	0x30 *	Fading Margin Improvement, refer to 3.4.4 0x00 → Normal mode 0x20 → Improved margin, use if AfcLowBetaOn=1 0x30 → Improved margin, use if AfcLowBetaOn=0
RegTestAfc (0x71)	7-0	LowBetaAfcOffset	rw	0x00	AFC offset set for low modulation index systems, used if AfcLowBetaOn=1. Offset = LowBetaAfcOffset x 488 Hz

7. Application Information

7.1. Crystal Resonator Specification

Table 31 shows the crystal resonator specification for the crystal reference oscillator circuit of the LJ1269H . This specification covers the full range of operation of the LJ1269H and is employed in the reference design.

Table 31 Crystal Specification

Symbol	Description	Conditions	Min	Typ	Max	Unit
FXOSC	XTAL Frequency		26	-	32	MHz
RS	XTAL Serial Resistance		-	30	140	ohms
C0	XTAL Shunt Capacitance		-	2.8	7	pF
CLOAD	External Foot Capacitance	On each pin XTA and XTB	8	16	22	pF

Notes - the initial frequency tolerance, temperature stability and ageing performance should be chosen in accordance with the target operating temperature range and the receiver bandwidth selected.
- the loading capacitance should be applied externally, and adapted to the actual Cload specification of the XTAL.
- A minimum XTAL frequency of 28 MHz is required to cover the 863-870 MHz band, 29 MHz for the 902-928 MHz band

7.2. Reset of the Module

A power-on reset of the LJ1269H is triggered at power up. Additionally, a manual reset can be issued by controlling pin RESET.

7.2.1. POR

If the application requires the disconnection of VDD from the LJ1269H , despite of the extremely low Sleep Mode current, the user should wait for 10 ms from of the end of the POR cycle before commencing communications over the SPI bus. Pin 6 (Reset) should be left floating during the POR sequence.

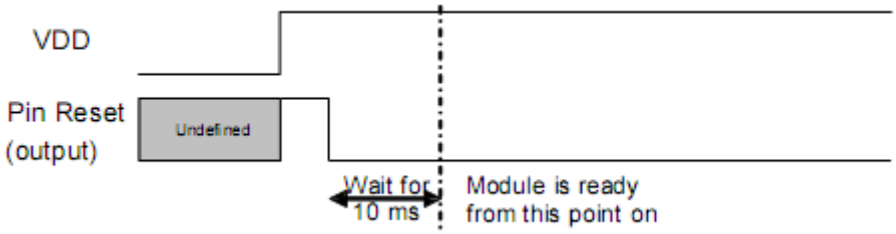

Figure 38. POR Timing Diagram

Please note that any CLKOUT activity can also be used to detect that the Moduleis ready.

7.2.2. Manual Reset

A manual reset of the LJ1269H is possible even for applications in which VDD cannot be physically disconnected. Pin RESET should be pulled high for a hundred microseconds, and then released. The user should then wait for 5 ms before using the module.

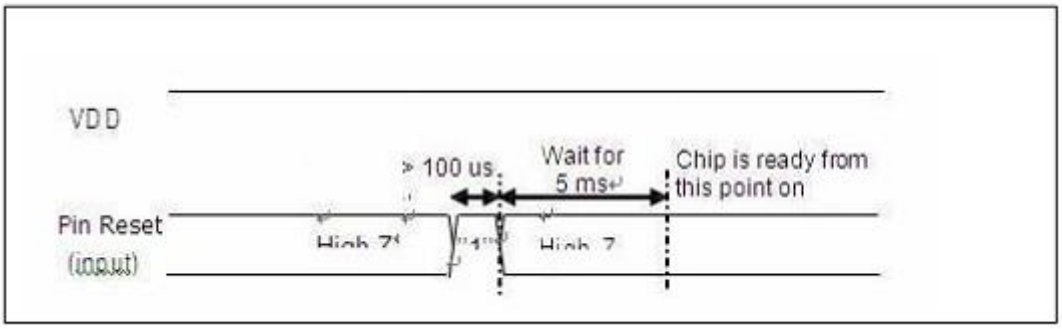

Figure 39. Manual Reset Timing Diagram

Note whilst pin RESET is driven high, an over current consumption of up to ten milliamps can be seen on VDD.

7.3. Reference Design

Please contact your representative for evaluation tools, reference designs and design assistance. Note that all schematics shown in this section are full schematics, listing ALL required components, including decoupling capacitors.

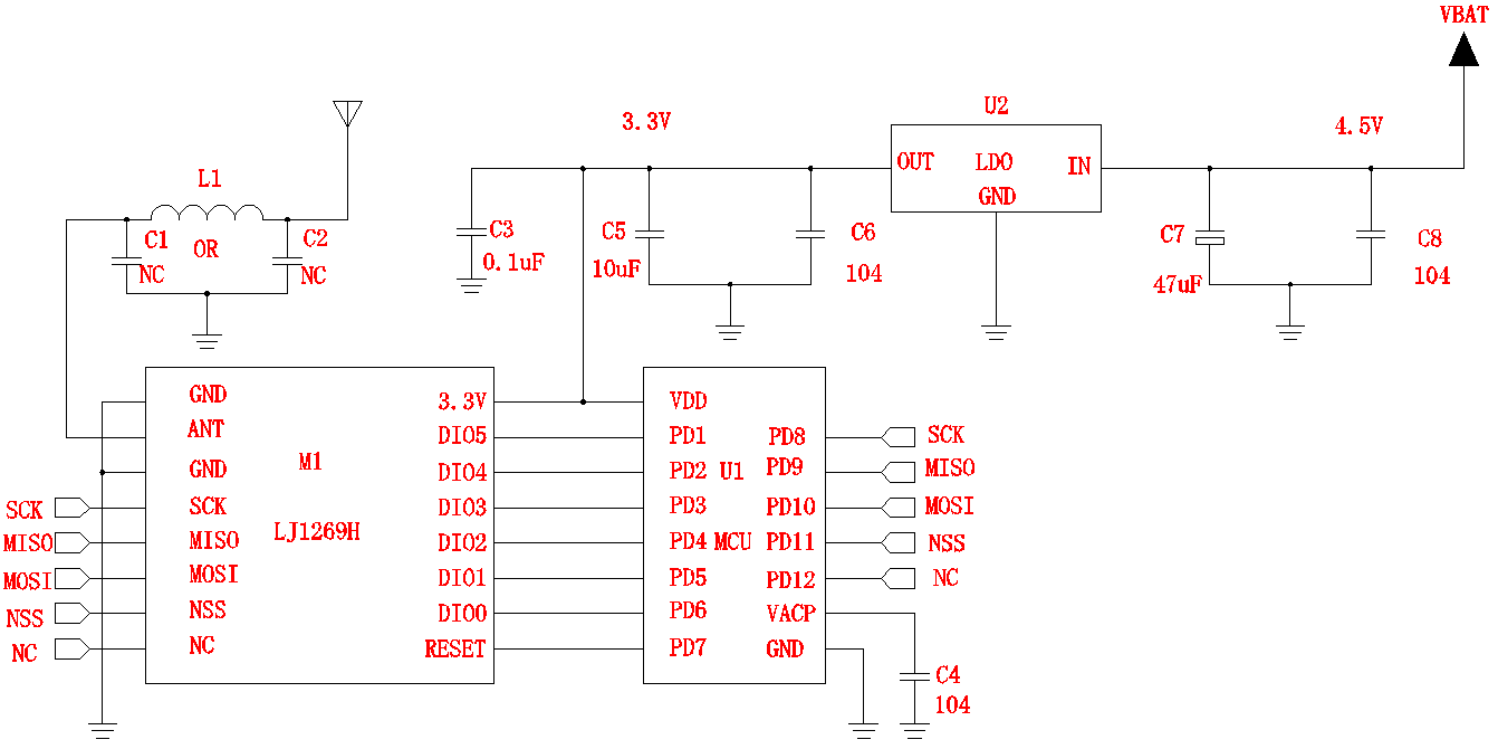

Figure 40. Typical Application Schematic

Table 32. BOM of Typical Application

Designator	Descriptions	Manufacturer
M1	ModuleLJ1269H 19.7*16*2.2mm RoHS	LJ ELECTRONICS
U1	IC 8 BIT MCU STM8S003F3 SSOP20 RoHS	MICROICHIP
U2	IC LDO XC6206P33PR 3.3V SOT-23 RoHS	TOREX
L1	Thick film resistor0R 5% 1/16W 0402 RoHS	ROHM
C1	CAP CER 0402 DO NOT FIT	
C2	CAP CER 0402 DO NOT FIT	
C3	CAP CER 0.1uF/25V 20% X7R 0402 RoHS	MURATA
C4	CAP CER 0.1uF/25V 20% X7R 0402 RoHS	MURATA
C5	CAP CER 10uF/16V 20% X5R 0402 RoHS	MURATA
C6	CAP CER 0.1uF/25V 20% X7R 0402 RoHS	MURATA
C7	CAP CER 47uF/16V 20% X5R 1206 RoHS	MURATA
C8	CAP CER 0.1uF/25V 20% X7R 0402 RoHS	MURATA

8. Packaging Information

8.1. Package Outline Drawing

Unit: mm

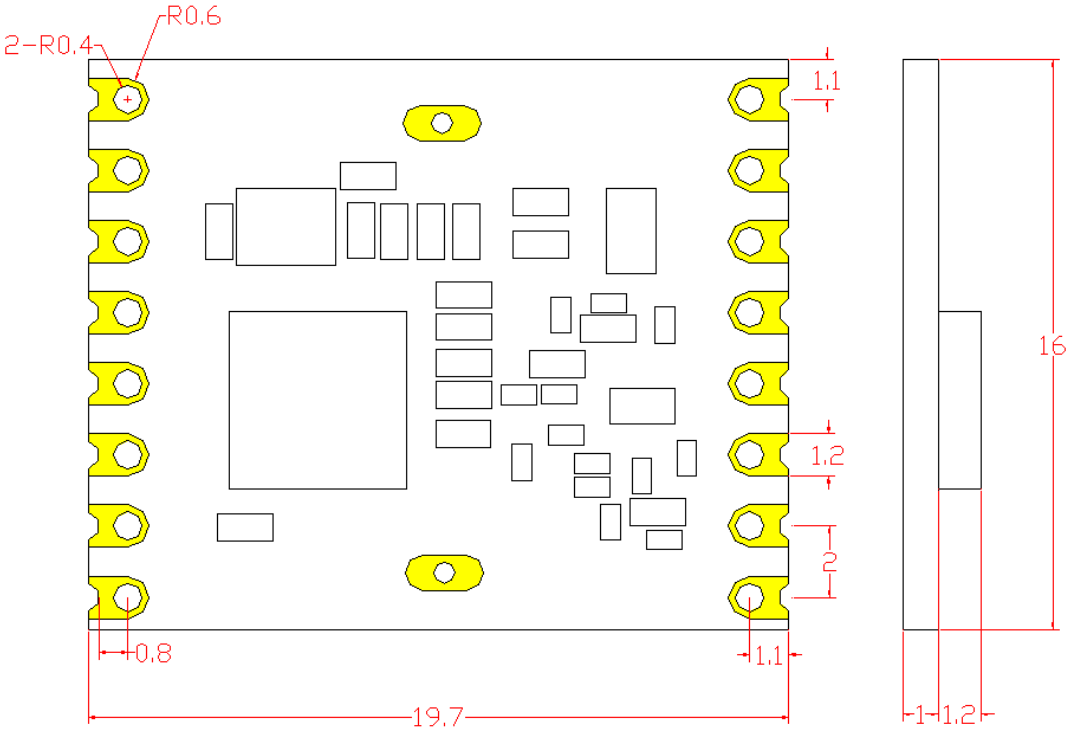

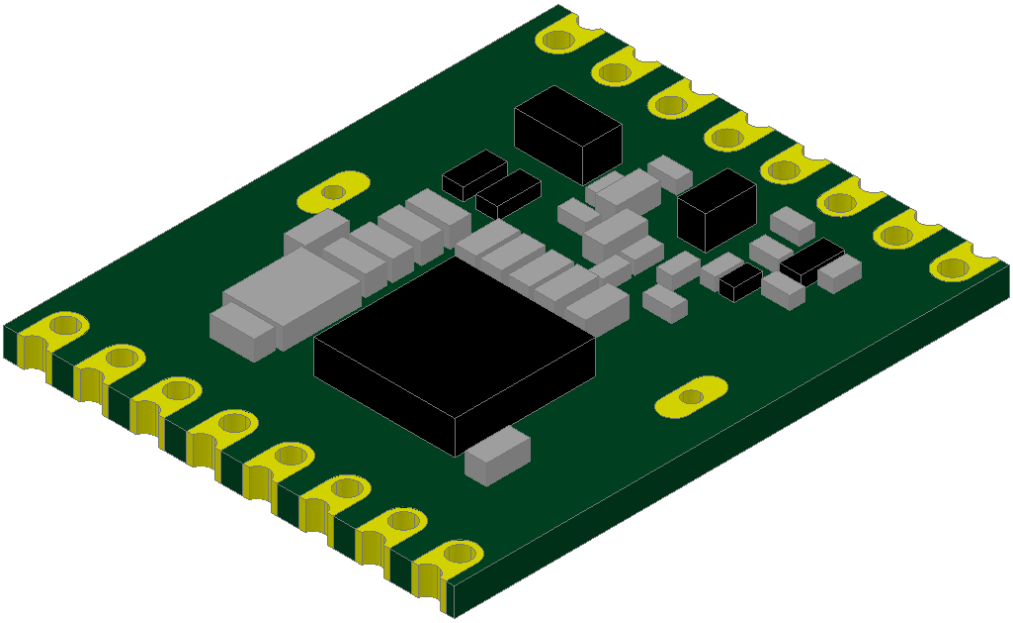

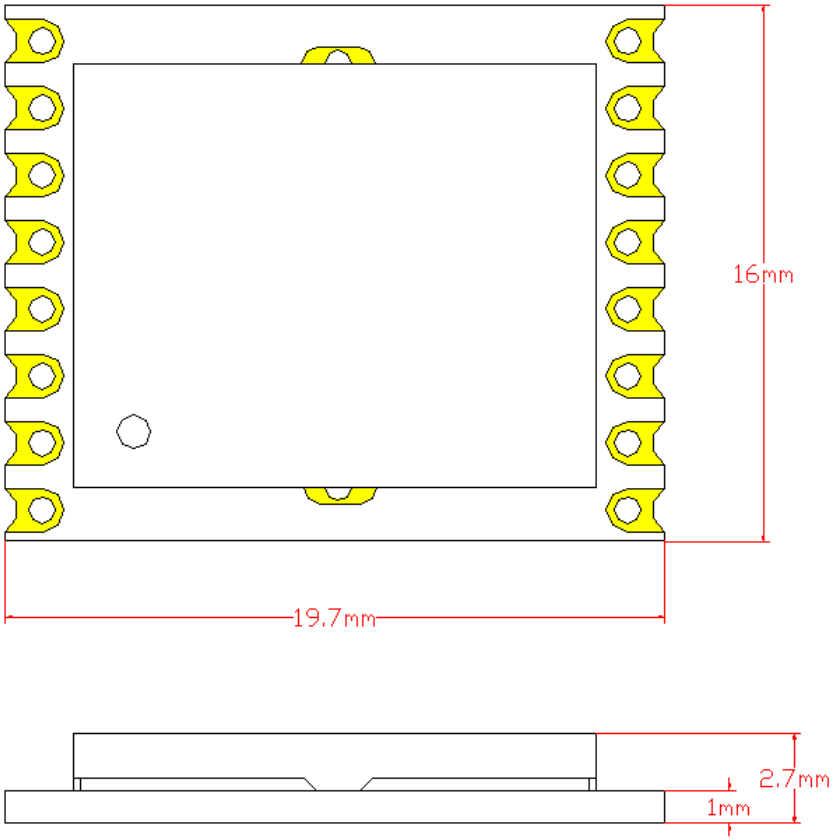

8.2 Tray packaging

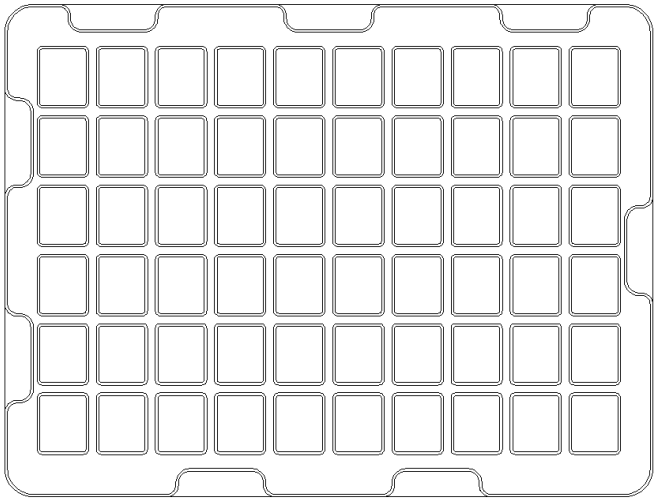

Figure 41. Package Outline Drawing

Note:

tray packaging, 60pcs/tray.

9. Recommended PCB Land Pattern

Unit: mm

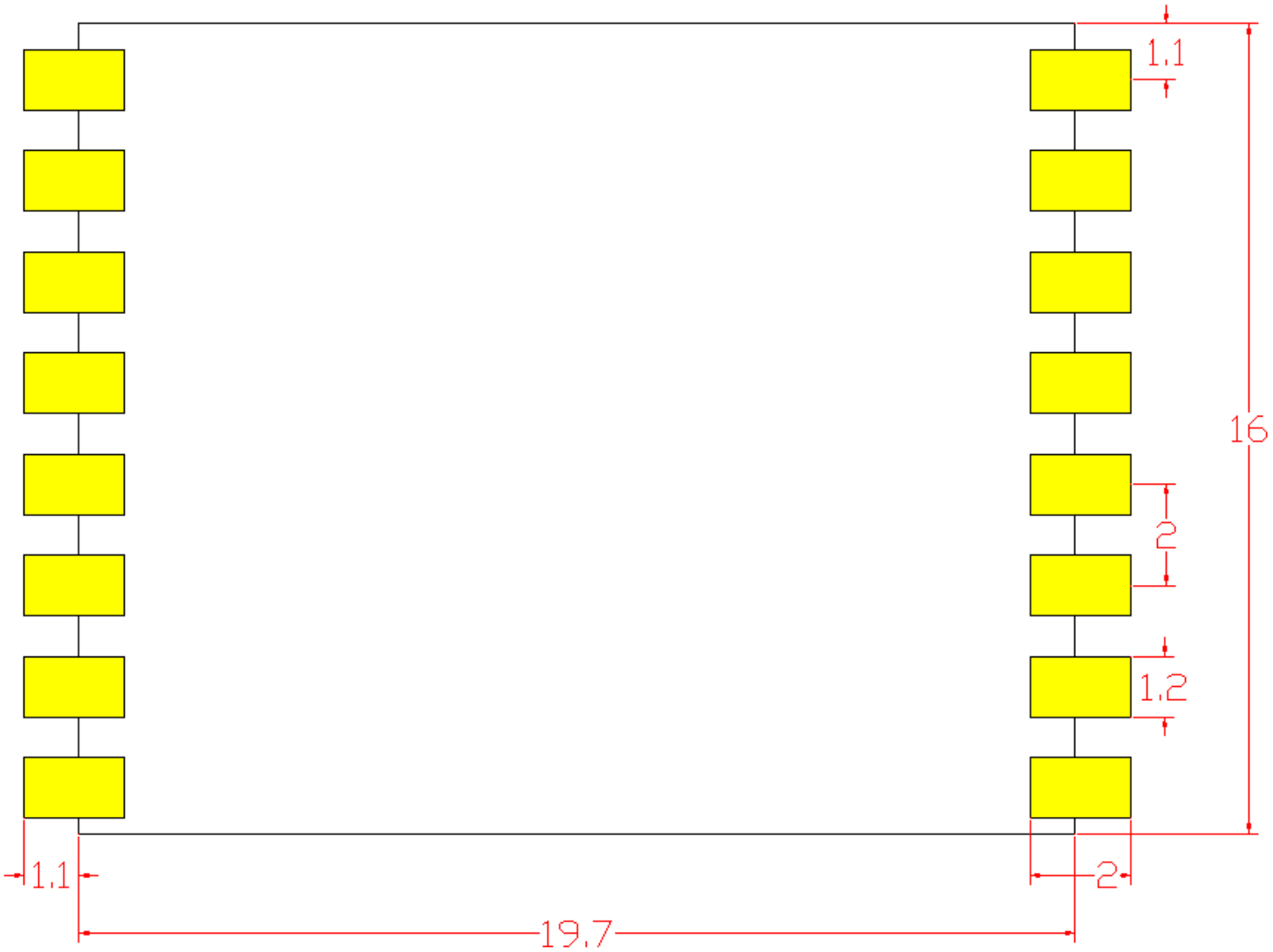

10. Ordering Information

LJ1269H — 433 — X

Package

Blank: tray packaging

R: Reel Packaging

Operation Band

315MHz

433MHz

868MHz

915MHz

Model

11. Revision History

Table 33 Revision History

Revision	Date	Updated History
Rev1.0	March 2014	The first final release

Appendix

This document covers the Regulatory Compliance information and related documents shared with customers.

1.1 Antenna Considerations: The list of Approved antennas: three Antennas, SMA Antenna, Line Antenna and Spring Antenna, the use of a standard antenna jack or electrical connector is prohibited, and the max Antenna Gain is 1.8 dBi.

1.2 Usage Instructions under Limited Modular Approval

When used in USA, will only work on the 902-928 MHz Frequency band. The Host product manufacturer must ensure that the RF behavior adheres to the certification requirements when the module is installed in the final Host product.

2.1 United States

The module has received Federal Communications Commission (FCC) CFR47 Telecommunications, Part 15 Subpart C "Intentional Radiators" limited single-modular approval in accordance with Part 15.212 Modular Transmitter approval. Single modular transmitter approval is defined as a complete RF transmission sub-assembly, designed to be incorporated into another device, that must demonstrate compliance with FCC rules and policies independent of any host. A transmitter with a modular grant can be installed in different end-use products (referred to as a host, host product, or host device) by the grantee or other equipment manufacturer, then the host product may not require additional testing or equipment authorization for the transmitter function provided by that specific module or limited module device.

The user must comply with all of the instructions provided by the Grantee, which indicate installation and/or operating conditions necessary for compliance.

A host product itself is required to comply with all other applicable FCC equipment authorization regulations, requirements, and equipment functions that are not associated with the transmitter module portion. For example, compliance must be demonstrated: to regulations for other transmitter components within a host product; to requirements for unintentional radiators (Part 15 Subpart B), such as digital devices, computer peripherals, radio receivers, etc.; and to additional authorization requirements for the non-transmitter functions on the transmitter module (i.e., SDoC or Certification) as appropriate (e.g., Bluetooth and Wi-Fi transmitter modules may also contain digital logic functions).

2.1.1 Labeling and User Information Requirements

The module has been labeled with their own FCC ID number. If the FCC ID is not visible when the module is installed inside another device, then the outside of the finished product into which the module is installed must display a label referring to the enclosed module. This exterior label can use wording as follows:

Contains Transceiver Module FCC ID: 2ATKS-1269H **or Contains FCC ID:** 2ATKS-1269H

This device complies with Part 15 of the FCC Rules. Operation is subject to the following two conditions: (1) this device may not cause harmful interference, and (2) this device must accept any interference received, including interference that may cause undesired operation.

A user's manual for the finished product should include the following statement:

This equipment has been tested and found to comply with the limits for a Class B digital device, pursuant to part 15 of the FCC Rules. These limits are designed to provide reasonable protection against harmful interference in a residential installation. This equipment generates, uses and can radiate radio frequency energy, and if not installed and used in accordance with the instructions, may cause harmful interference to radio communications. However, there is no guarantee interference will not occur in a particular installation. If this equipment does cause harmful interference to radio or television reception, which can be determined by turning the equipment off and on, the user is encouraged to try to correct the interference by one or more of the following measures:

• Reorient or relocate the receiving antenna
• Increase the separation between the equipment and receiver
• Connect the equipment into an outlet on a circuit different from that to which the receiver is connected • Consult the dealer or an experienced radio/TV technician for help

Requirement per KDB996369 D03

2.2 List of applicable FCC rules

List the FCC rules that are applicable to the modular transmitter. These are the rules that specifically establish the bands of operation, the power, spurious emissions, and operating fundamental frequencies. DO NOT list compliance to unintentional-radiator rules (Part 15 Subpart B) since that is not a condition of a module grant that is extended to a host manufacturer. See also Section 2.10 below concerning the need to notify host manufacturers that further testing is required.3

Explanation: This module meets the requirements of FCC part 15C(15.249).

2.3 Summarize the specific operational use conditions

Describe use conditions that are applicable to the modular transmitter, including for example any limits on antennas, etc. For example, if point-to-point antennas are used that require reduction in power or compensation for cable loss, then this information must be in the instructions. If the use condition limitations extend to professional users, then instructions must state that this information also extends to the host manufacturer's instruction manual. In addition, certain information may also be needed, such as peak gain per frequency band and minimum gain, specifically for master devices in 5 GHz DFS bands.

Explanation: The list of Approved antennas: three Antennas, SMA Antenna, Line Antenna and Spring Antenna, the use of a standard antenna jack or electrical connector is prohibited, and the max Antenna Gain is 1.8 dBi.

2.4 Limited module procedures

If a modular transmitter is approved as a "limited module," then the module manufacturer is responsible for approving the host environment that the limited module is used with. The manufacturer of a limited module must describe, both in the filing and in the installation instructions, the alternative means that the limited module manufacturer uses to verify that the host meets the necessary requirements to satisfy the module limiting conditions.

A limited module manufacturer has the flexibility to define its alternative method to address the conditions that limit the initial approval, such as: shielding, minimum signaling amplitude, buffered modulation/data inputs, or power supply regulation. The alternative method could include that the limited module manufacturer reviews detailed test data or host designs prior to giving the host manufacturer approval.

This limited module procedure is also applicable for RF exposure evaluation when it is necessary to demonstrate compliance in a specific host. The module manufacturer must state how control of the product into which the modular transmitter will be installed will be maintained such that full compliance of the product is always ensured. For additional hosts other than the specific host originally granted with a limited module, a Class II permissive change is required on the module grant to register the additional host as a specific host also approved with the module.

Explanation: The module is a Single Modular

2.5 Trace antenna designs

For a modular transmitter with trace antenna designs, see the guidance in Question 11 of KDB Publication 996369 D02 FAQ – Modules for Micro-Strip Antennas and traces. The integration information shall include for the TCB review the integration instructions for the following aspects: layout of trace design, parts list (BOM), antenna, connectors, and isolation requirements.

a) Information that includes permitted variances (e.g., trace boundary limits, thickness, length, width, shape(s), dielectric constant, and impedance as applicable for each type of antenna);

b) Each design shall be considered a different type (e.g., antenna length in multiple(s) of frequency, the wavelength, and antenna shape (traces in phase) can affect antenna gain and must be considered);

c) The parameters shall be provided in a manner permitting host manufacturers to design the printed circuit (PC) board layout;

d) Appropriate parts by manufacturer and specifications;

e) Test procedures for design verification; and

f) Production test procedures for ensuring compliance.

The module grantee shall provide a notice that any deviation(s) from the defined parameters of the antenna trace, as described by the instructions, require that the host product manufacturer must notify the module grantee that they wish to change the antenna trace design. In this case, a Class II permissive change application is required to be filed by the grantee, or the host manufacturer can take responsibility through the change in FCC ID (new application) procedure followed by a Class II permissive change application.

Explanation: Not applicable, The module without trace antenna designs.

2.6 RF exposure considerations

It is essential for module grantees to clearly and explicitly state the RF exposure conditions that permit a host product manufacturer to use the module. Two types of instructions are required for RF exposure information: (1) to the host product manufacturer, to define the application conditions (mobile, portable – xx cm from a person's body); and (2) additional text needed for the host product manufacturer to provide to end users in their end-product manuals. If RF exposure statements and use conditions are not provided, then the host product manufacturer is required to take responsibility of the module through a change in FCC ID (new application).

Explanation: This module complies with FCC RF radiation exposure limits set forth for an uncontrolled environment. This module is designed to comply with the FCC statement, FCC ID is: 2ATKS-1269H.

2.7 Antennas

A list of antennas included in the application for certification must be provided in the instructions. For modular transmitters approved as limited modules, all applicable professional installer instructions must be included as part of the information to the host product manufacturer. The antenna list shall also identify the antenna types (monopole, PIFA, dipole, etc. (note that for example an "omni-directional antenna" is not considered to be a specific "antenna type")).

For situations where the host product manufacturer is responsible for an external connector, for example with an RF pin and antenna trace design, the integration instructions shall inform the installer that unique antenna connector must be used on the Part 15 authorized transmitters used in the host product. The module manufacturers shall provide a list of acceptable unique connectors.

Explanation: The list of Approved antennas: three Antennas, SMA Antenna, Line Antenna and Spring Antenna, the use of a standard antenna jack or electrical connector is prohibited, and the max Antenna Gain is 1.8 dBi.

2.8 Label and compliance information

Grantees are responsible for the continued compliance of their modules to the FCC rules. This includes advising host product manufacturers that they need to provide a physical or e-label stating "Contains FCC ID" with their finished product. See Guidelines for Labeling and User Information for RF Devices – KDB Publication 784748.

Explanation: The host system using this module, should have label in a visible area indicated the following texts: "Contains FCC ID: 2ATKS-1269H.

2.9 Information on test modes and additional testing requirements[5]

Additional guidance for testing host products is given in KDB Publication 996369 D04 Module Integration Guide. Test modes should take into consideration different operational conditions for a stand-alone modular transmitter in a host, as well as for multiple simultaneously transmitting modules or other transmitters in a host product.

The grantee should provide information on how to configure test modes for host product evaluation for different operational conditions for a stand-alone modular transmitter in a host, versus with multiple, simultaneously transmitting modules or other transmitters in a host.

Grantees can increase the utility of their modular transmitters by providing special means, modes, or instructions that simulates or characterizes a connection by enabling a transmitter. This can greatly simplify a host manufacturer's determination that a module as installed in a host complies with FCC requirements.

Explanation: Data transfer module demo board can control the EUT work in RF test mode at spcified test channel.

2.10 Additional testing, Part 15 Subpart B disclaimer

The grantee should include a statement that the modular transmitter is **only** FCC authorized for the specific rule parts (i.e., FCC transmitter rules) listed on the grant, and that the host product manufacturer is responsible for compliance to any other FCC rules that apply to the host not covered by the modular transmitter grant of certification. If the grantee markets their product as being Part 15 Subpart B compliant (when it also contains unintentional-radiator digital circuity), then the grantee shall provide a notice stating that the final host product still requires Part 15 Subpart B compliance testing with the modular transmitter installed.

Explanation: The module without unintentional-radiator digital circuity, so the module does not require an evaluation by FCC Part 15 Subpart B. The host shoule be evaluated by the FCC Subpart B.

12. Contact us:

LJ ELECTRONICS TECHNOLOGY LIMITED

Address: The 2nd Floor (west side),JieAn Industrial Park, The 1st Industrial Road,

TuTang Village,ChangPing Town,DongGuan City, GuangDong, China

TEL: 0769-81096302 0769-81096303 FAX: 0769-81096306

E-mail: sales@ljelect.com

Http://www. ljelect.com

All Rights Reserved. LJelect reserves the right to make changes without further notice to any products or data herein to improve reliability, function, or design. The information contained within is believed to be accurate and reliable. However, LJelect does not assume any liability arising out of the application or use of this information, nor the application or use of any product or circuit described herein.