SHOWER SPEAKER USER MANUAL

ban.dō

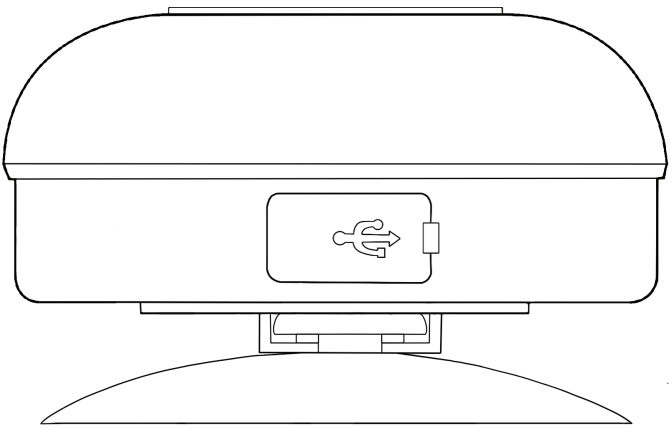

SAFETY INSTRUCTIONS:

Read this manual carefully before using the speaker and keep this manual for future reference.

- **Keep the ban.dō shower speaker away from heat, direct flame, direct sunlight, and sharp edges.**
- **To avoid risk of short circuit do not insert any unintended metal object into the ban.dō shower speaker.**
- **To avoid a static charge, do not use the ban.dō shower speaker in an extremely dry climate.**
- **Do not submerge in water.**
- **Slightly moisten suction cup with water and firmly press to flat, clean, dry surface making sure there are no air bubbles.**
- **Not a toy. Keep out of children's reach.**

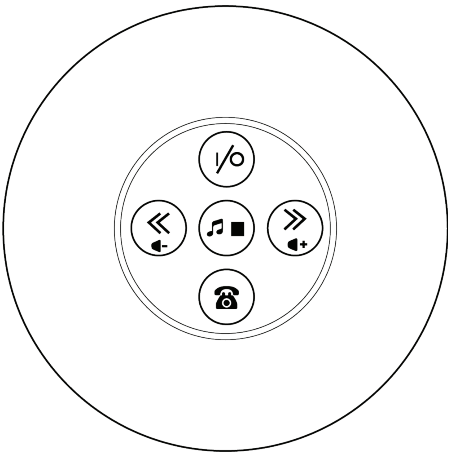

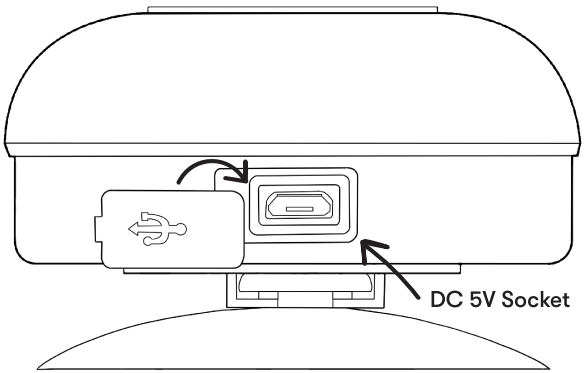

Accessories included: 1 USB charging cable

TO CHARGE INTEGRATED LITHIUM BATTERY:

1. **Insert the charging cable into the DC 5V socket on the speaker. Connect the USB plug into a computer or AC/DC adaptor with DC 5V 500mA.**

2. **The LED indicator turns red when the battery is being charged.**

3. **The red LED indicator turns off when the battery is fully charged.**

4. **When not charging, place cover securely over DC 5V socket to ensure water resistance.**

5. **Do not charge in the shower or other wet environments.**

PAIRING BAN.DO SHOWER SPEAKER BLUETOOTH® TO A MOBILE PHONE/DEVICE:

Ban.dō shower speaker

1. **Important! Start with your ban.dō shower speaker in the off mode.**

2. **Press and hold the on/off button for about 3 seconds until the blue LED is flashing alternately.**

3. **The ban.dō shower speaker is now ready for pairing.**

MOBILE PHONE OR DEVICE:

1. Turn on your mobile phone/ device and activate the Bluetooth® function.

2. Search for Bluetooth® devices until you see “ban.dō”.

3. Pair your device with “ban.dō”. If a password is needed, type in “0000”.

4. After “ban.dō” is paired, connect it to your device.

5. Once the speaker is paired and connected to your mobile phone/device, the next time the speaker is on, it will connect to your mobile phone/device automatically as long as the Bluetooth® in your mobile phone is on.

BUTTON DESCRIPTION:

On/Off

Short press for the previous song, long press to turn down the volume

Short press for next song, long press to turn up the volume

Play/pause music

Answer incoming call

- **You can press the phone button twice quickly to redial the last phone call.**

TROUBLESHOOTING:

SYMPTOMS	CAUSES	SOLUTIONS
Speaker will not turn on	Battery not charged	Charge battery
Unable to pair the speaker	Speaker is switched on, but it is not in pairing mode	Refer to the section “Pairing the ban.dō shower speaker to Mobile Phone/Device”

TECHNICAL SPECIFICATIONS:

Bluetooth® Support Range	**5.0**
Range	**32 feet/10 meters**
Transmitting Frequency	**2.4 GHz**
Power Supply	**DC5V/500mA**
Battery	**3.7V 500mAh Lithium Polymer**
Charging Time	**Approx. 2 hours**
Operating Time	**Approx. 3 hours at 75% volume**
IP Grade	**IPx4**
Unit Weight	**Approx. 0.13kg**

FCC compliance statement

This device complies with Part 15 of the FCC Rules. Operation is subject to the following two conditions: (1) this device may not cause harmful interference, and (2) this device must accept any interference received, including interference that may cause undesired operation.

Important: Changes or modifications not expressly approved by the part responsible for compliance could void the user's authority to operate the equipment.

This equipment complies with FCC radiation exposure limits set forth for an uncontrolled environment.

FCC Statement:
NOTE: This equipment has been tested and found to comply with the limits for a Class B digital device, pursuant to part 15 of the FCC Rules. These limits are designed to provide reasonable protection against harmful interference in a residential installation. This equipment generates, uses and can radiate radio frequency energy and, if not installed and used in accordance with the instructions, may cause harmful interference to radio communications. However, there is no guarantee that interference will not occur in a particular installation. If this equipment does cause harmful interference to radio or television reception, which can be determined by turning the equipment off and on, the user is encouraged to try to correct the interference by one or more of the following measures:

- Reorient or relocate the receiving antenna.
- Increase the separation between the equipment and receiver.
- Connect the equipment into an outlet on a circuit different from that to which the receiver is connected.
- Consult the dealer or an experienced radio/TV technician for help.

IC statement:

This device complies with Industry Canada licence-exempt RSS standard(s).
Operation is subject to the following two conditions: (1) this device may not cause interference, and (2) this device must accept any interference, including interference that may cause undesired operation of the device. This equipment complies with Industry Canada radiation exposure limits set forth for an uncontrolled environment.

Made in China