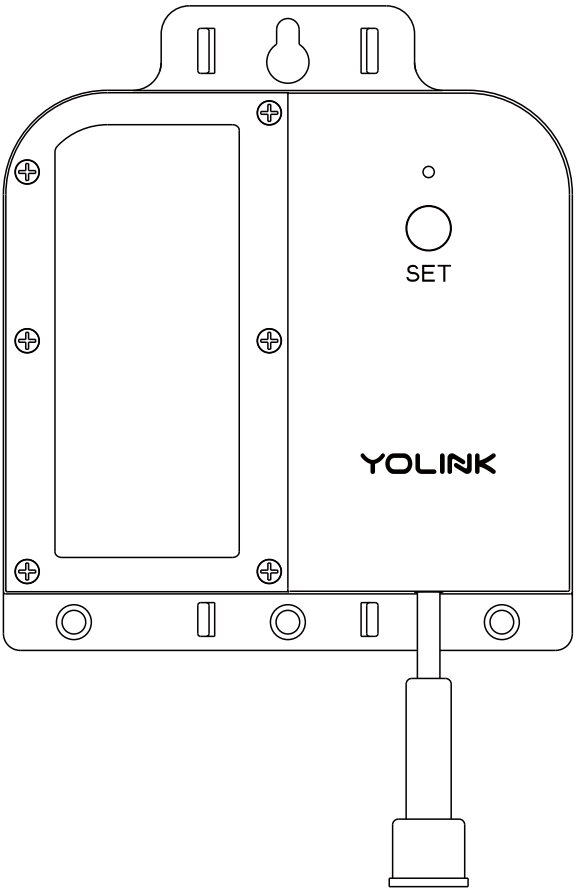

X3 Valve Controller

YS7105-UC

Installation & User Guide

Revision May. 31, 2023

TABLE OF CONTENTS

A . Welcome! 01
B . Before You Begin 02
C . What's Included 04
D . Required Items 06
E . Get to Know Your X3 Valve Controller 08
F . Power Up 09
G . Install the App 10
H . Add Your X3 Valve Controller to the App 11
I . Install the X3 Valve Controller 13

J . Get to Know Your Bulldog Valve Robot 15
K . Install the Bulldog Valve Robot 16
L . Final Connections 22
M . Manual Operation 23
N . Testing 24
O . Troubleshooting 25

P . Get to Know Your Motorized Valve 27
Q . Install the Motorized Valve 28
R . Final Connections 32
S . Manual Operation 32
T . Testing 33
U . Troubleshooting 34

V . Control-D2D Device-to-Device Pairing 36
W . Using the App & 3rd-Party Services 39
X . Factory Reset 39
Y . Firmware Update 40
Z . Warnings 41
AA. Warranty 43
AB. FCC Statement 44
AC. Contact Us 46

A Welcome!

Thank you for purchasing YoLink products! We appreciate you trusting YoLink for your smart home & automation needs. Your 100% satisfaction is our goal. If you experience any problems with your installation, with our products or if you have any questions that this manual does not answer, please contact us right away. See the Contact Us section for more info.

Thank you!

Eric Vanzo
Customer Experience Manager

User Guide Conventions

The following icons are used in this guide to convey specific types of information:

⚠ Very important information (can save you time!)

🤔 Good to know info but may not apply to you

B Before You Begin

Visit our X3 Valve Controller support page on our website, for the latest installation guides, additional resources, information and videos by visiting:

www.shop.yosmart.com/pages/x3-valve-controller-product-support

Or by scanning the QR code:

Download the most current version of the user guide by scanning the QR code:

B Before You Begin

Please note: the existing ball valve must be in good working order. It must open and close smoothly, with minimal effort, and it must close fully, shutting off the water completely. The Bulldog Valve Robot is not able to correct mechanical issues of the ball valve.

Your X3 Valve Controller connects to the internet via a YoLink Hub or SpeakerHub, and it does not directly connect to your WiFi or local network. In order for remote access to the device from the app, and for full-functionality, a YoLink hub is required. This guide assumes the YoLink app has been installed on your phone, and a YoLink Hub or SpeakerHub is installed and online.

If installing the X3 Valve Controller and Bulldog Valve Robot outdoors, please refer to the environmental range specifications found on the Valve Controller product support page. While these devices can be installed outdoors, it should be protected from rain and direct sunlight by an enclosure or overhead cover, such as a rain hood.

C What's Included

YS5001(S) Items:

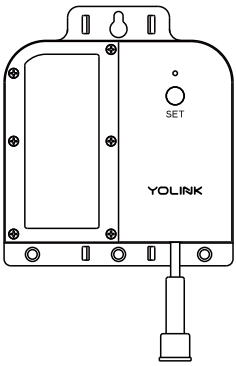

X3 Valve Controller

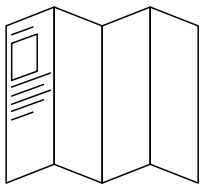

Quick Start Guide

C What's Included, Continued

Bulldog Valve Robot Kit Items:

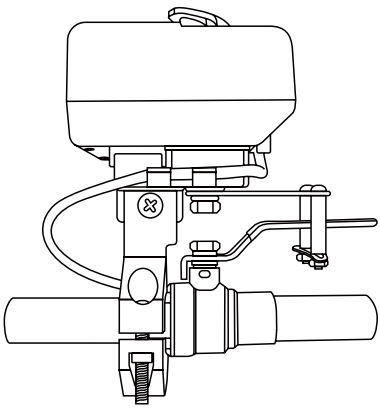

Bulldog Valve Robot

24-36x50

36-52x54

Large & Small Brackets

Motorized Valve Kit Items:

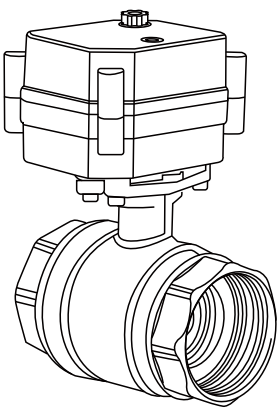

Motorized Valve

D Required Items

These tools or items may be required:

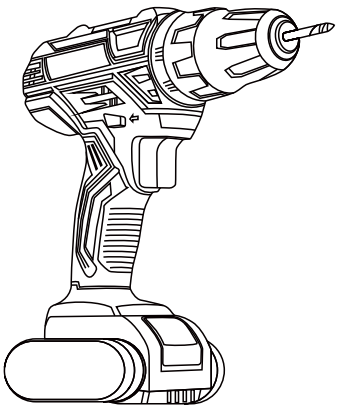

Drill with Drill Bits

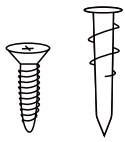

Wall Anchors

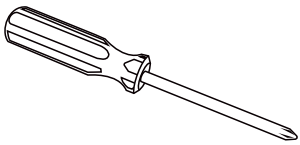

Medium Phillips Screwdriver

These items will be required to install the Bulldog Valve Robot:

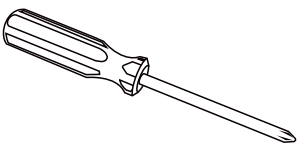

Medium Phillips Screwdriver

D Required Items, Continued

These items may be required to install the motorized valve:

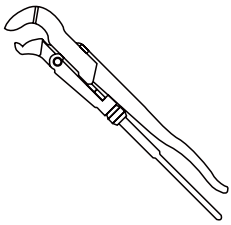

Pipe Wrench

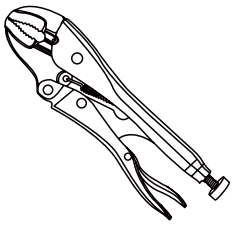

Locking Pliers

Copper Pipe Cutting Tool

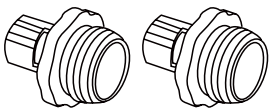

Pipe Fittings/Adapters

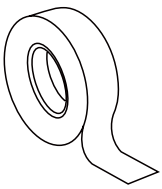

Thread Seal Tape

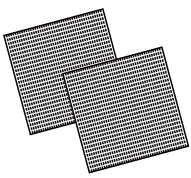

Sandpaper

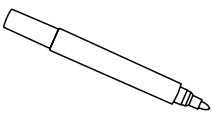

Marker or Pencil

E Get to Know Your X3 Valve Controller

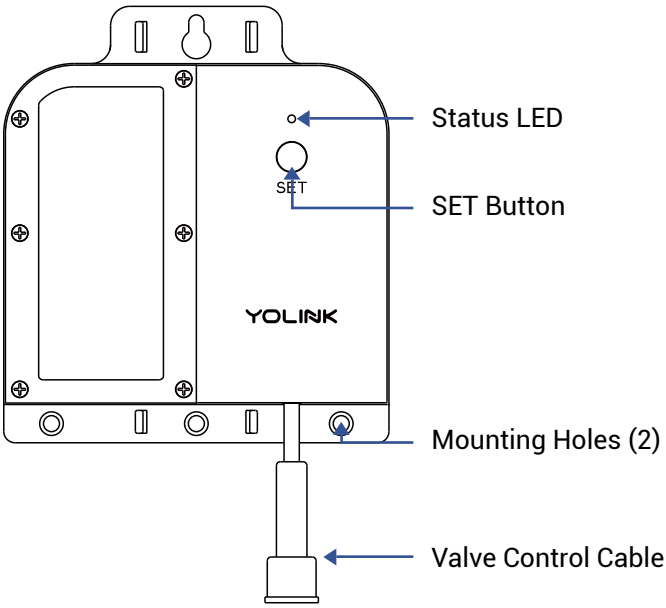

LED Behaviors

Blinking Red Once, Then Green Once
Device Start-Up

Blinking Red And Green Alternately
Restoring to Factory Defaults

Blinking Red Once
Valve Closing

Quick Blinking Red Twice
Valve is Closed

Blinking Green Once
Valve Opening

Quick Blinking Green Twice
Valve is Open

Quick Blinking Green
Control-D2D Pairing in Progress

Quick Blinking Red
Control-D2D Unpairing in Progress

Slow Blinking Green
Updating

Fast Blinking Red Once Every 30 Seconds
Low Battery, Replace Batteries Soon

F Power Up

Power up the X3 Valve Controller by briefly pressing the SET button, until the LED flashes (red, then green).

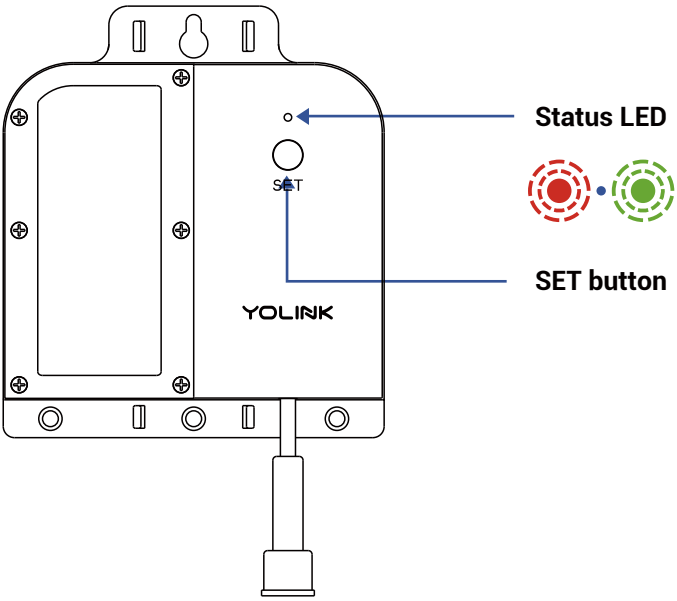

G Install the App

If you are new to YoLink, please install the app on your phone or tablet, if you have not already. Otherwise, please proceed to the next section.

Scan the appropriate QR code below or find the "YoLink app" on the appropriate app store.

Download on the App Store

Apple phone/tablet
iOS 9.0 or higher

Available on Google Play

Android phone/tablet
4.4 or higher

Open the app and tap **Sign up for an account**. You will be required to provide a username and a password. Follow the instructions, to set up a new account. Allow notifications, when prompted.

You will immediately receive a welcome email from no-reply@yosmart.com with some helpful information. Please mark the yosmart.com domain as safe, to ensure you receive important messages in the future.

Log in to the app using your new username and password.

The app opens to the **Favorite** screen. This is where your favorite devices and scenes will be shown. You can organize your devices by room, in the **Rooms** screen, later.

H Add Your X3 Valve Controller to the App

1. Tap **Add Device** (if shown) or tap the scanner icon:

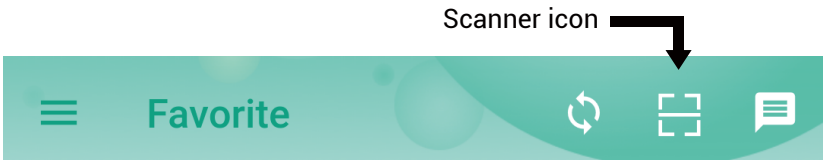

2. Approve access to your phone's camera, if requested. A viewfinder will be shown on the app.

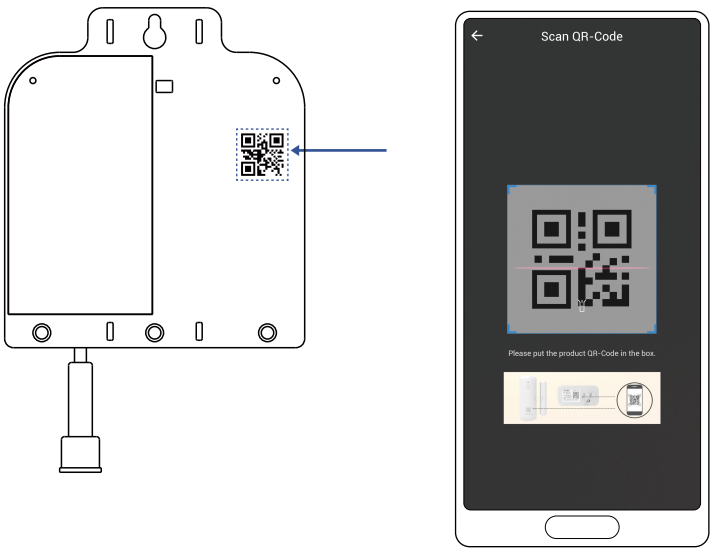

3. Hold the phone over the QR code so that the code appears in the viewfinder. If successful, the **Add Device** screen will be displayed.

H Add Your X3 Valve Controller to the App, Continued

4. You can change the device name and assign it to a room later. Tap **Bind device**.

5. If successful, the screen will appear as shown. Tap **Done**.

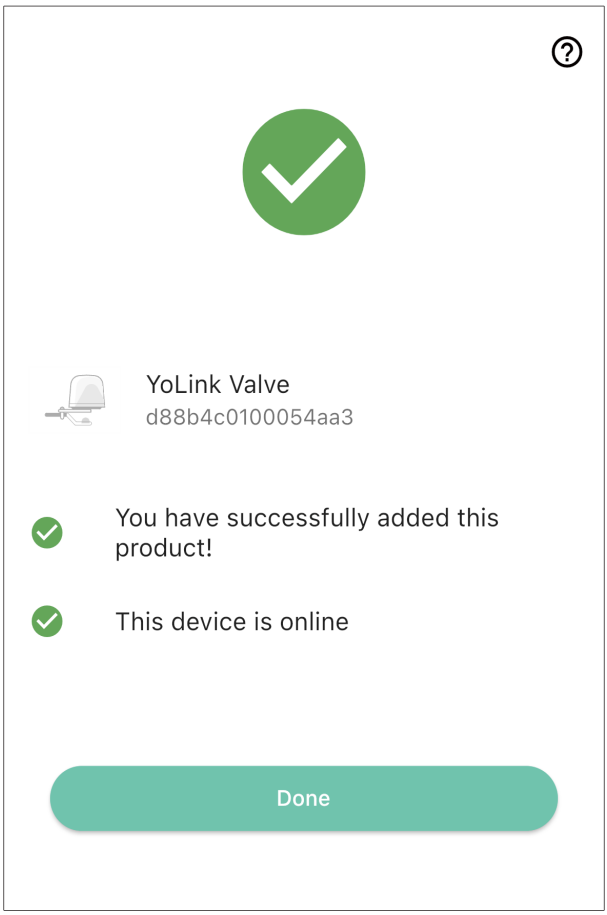

I Install the X3 Valve Controller

Preparing for installation:

Determine where you will mount the valve controller. The X3 Valve Controller was designed to be wall-mounted, at an indoor or outdoor location.

If installing your X3 Valve Controller and/or valve device at an outdoor location, please first refer to the environmental range specifications, found on the X3 Valve Controller product support page of our website. Also, while the X3 Valve Controller, the Bulldog Valve Controller and our motorized valves are rated for outdoor use, to ensure years of dependable operation, provide protection from rain and direct sunlight with overhead cover, in the form of an enclosure or rain hood.
Do not install your valve controller or valve device at a location where it will be submerged in water.

Install the X3 Valve Controller, Continued

With the use of optional extension cables, the valve controller can be installed remotely from the Bulldog or motorized valve. In some cases this may allow placing the controller at a more convenient or more accessible location (for battery replacement, etc.). The location of the valve controller must be within the limits of the cables. If in doubt, connect all applicable cables between the controller and the valve device and choose an appropriate location for the controller. (Extension cables can be purchased on our website.)

Determine how you will mount the valve controller to the wall, and ensure you have the appropriate mounting hardware (screws, anchors, etc.) for the wall surface.

Install the X3 Valve Controller:

1. Holding the valve controller at the desired location, and using a marker or pencil, transfer the valve controller's two mounting hole locations to the wall surface.

2. If using wall anchors, install them at this time, per the anchor manufacturer's instructions.

3. Holding the controller in place, insert the two screws in the anchors.

4. Tighten both screws, and confirm the valve controller is secured to the wall.

J Get to Know Your Bulldog Valve Robot

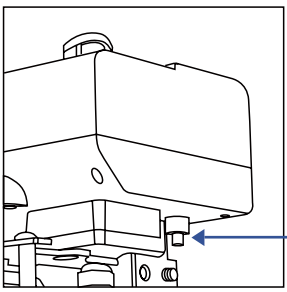

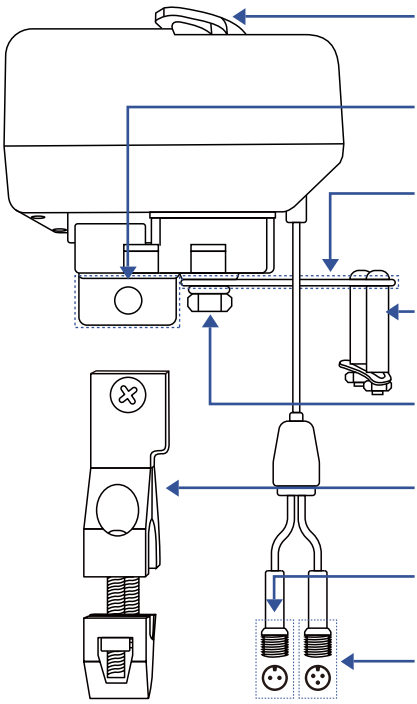

Please note: the existing ball valve must be in good working order. It must open and close smoothly, with minimal effort, and it must close fully, shutting off the water completely. The Bulldog Valve Robot is not able to correct mechanical issues of the ball valve.

K Install the Bulldog Valve Robot

1. Select the appropriate bracket for your application. The appropriate bracket fits over the ball valve (where it is connected to the pipe) and can subsequently be tightened securely to the ball valve. If the bracket does not fit over the ball valve, or seems to be too loose, try the other bracket.

2. Loosen the two screws on the bracket, to allow for separating it into two pieces, as shown.

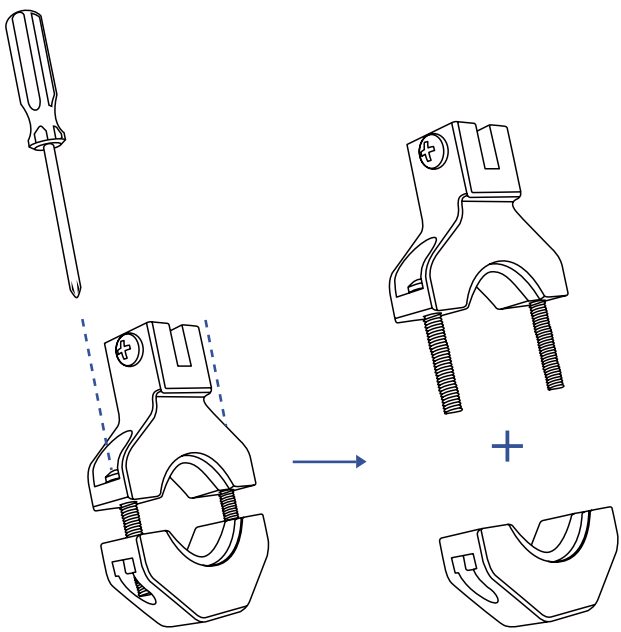

K Install the Bulldog Valve Robot, Continued

3. Place the upper bracket and lower bracket on the valve, as shown, and loosely tighten the screws.

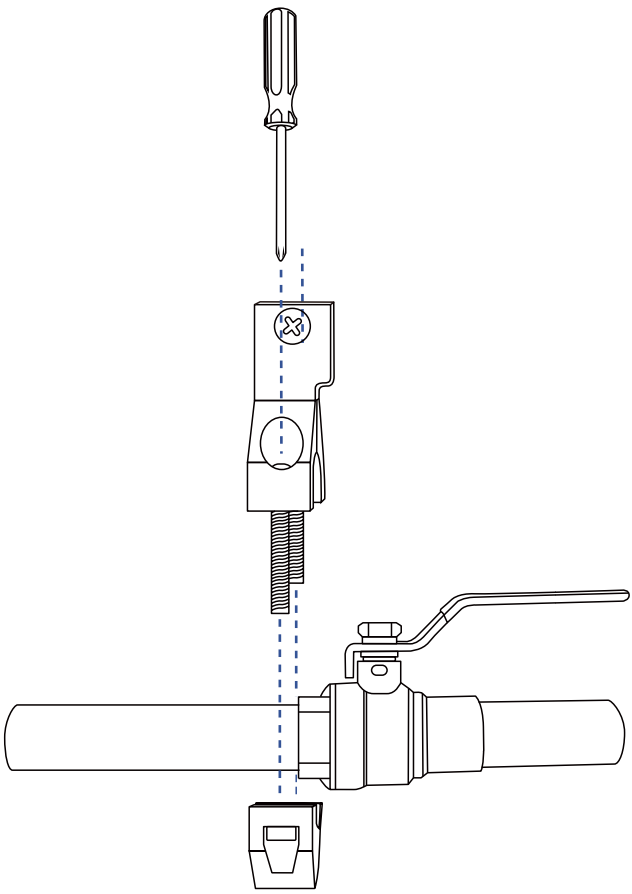

Important! The bracket must be mounted to the ball valve, not to the pipe. The ball valve should have at least one side shaped like a nut or bolt head. The brackets will not tighten to pipe or to a round portion of the ball valve.

K Install the Bulldog Valve Robot, Continued

4. Position the bracket so that it is aligned with the pivot point of the ball valve, by visualizing a line between the tab slot and the pivot point, as shown.

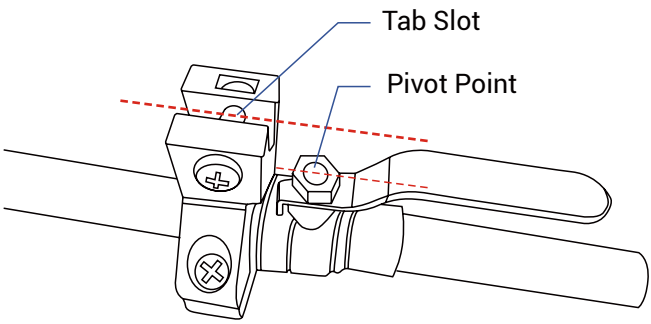

5. Remove the screw from the tab slot, then attach the Valve Robot to the bracket.

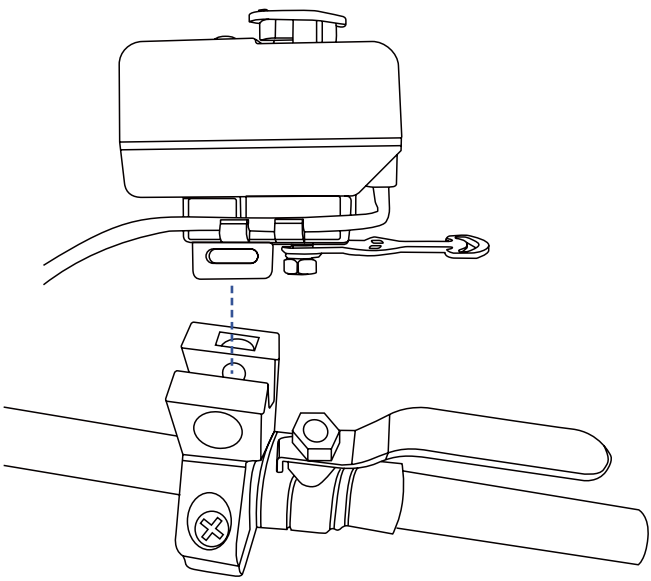

K Install the Bulldog Valve Robot, Continued

6. Keeping the center axis of the Valve Robot's motor shaft aligned with the ball valve shaft, as indicated by the red dashed line, reinsert and tighten the tab slot screw.

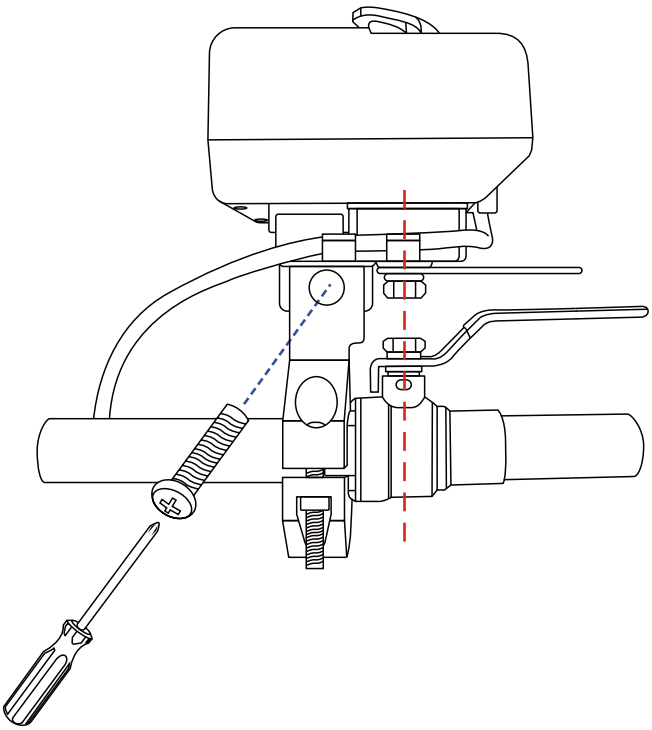

If it is not possible to align the parts as shown, or if the bracket can not be secured to the ball valve, consider rotating the ball valve handle 180°. After removing the Bulldog, this can be done by removing the ball valve handle, and then reinstalling it on the other side. Reinstall the Bulldog (on the other side of the ball valve) and check if alignment is better in this position.

K Install the Bulldog Valve Robot, Continued

7. Securely tighten the two screws on the bracket. Gently tug on the Bulldog, and tighten the screws until the Bulldog is firmly held in place by the bracket and tab screw.

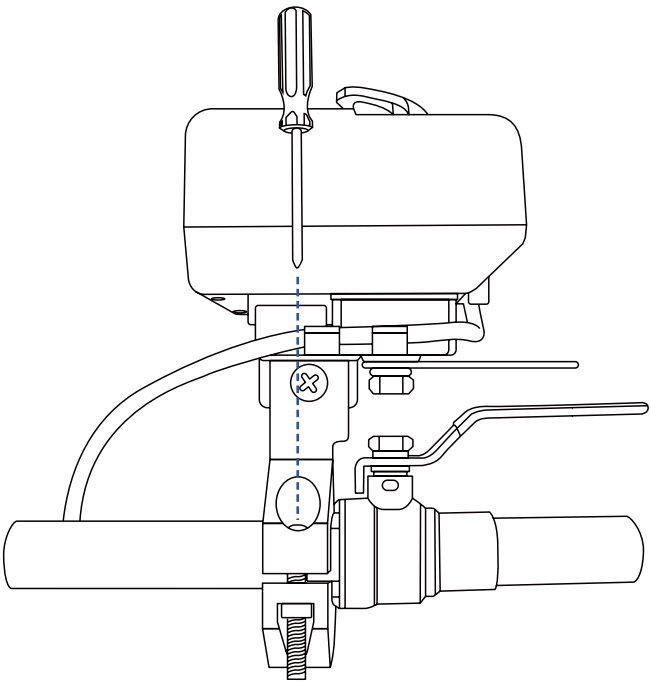

8. Remove the nuts and collars from the two handle supporting bolts, as shown.

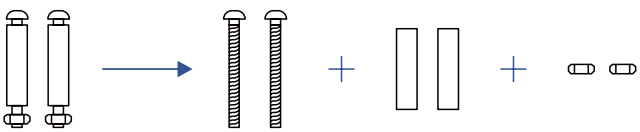

K Install the Bulldog Valve Robot, Continued

9. Place the bolts in the slot on the rocker arm, with one on each side of the valve handle, as shown.

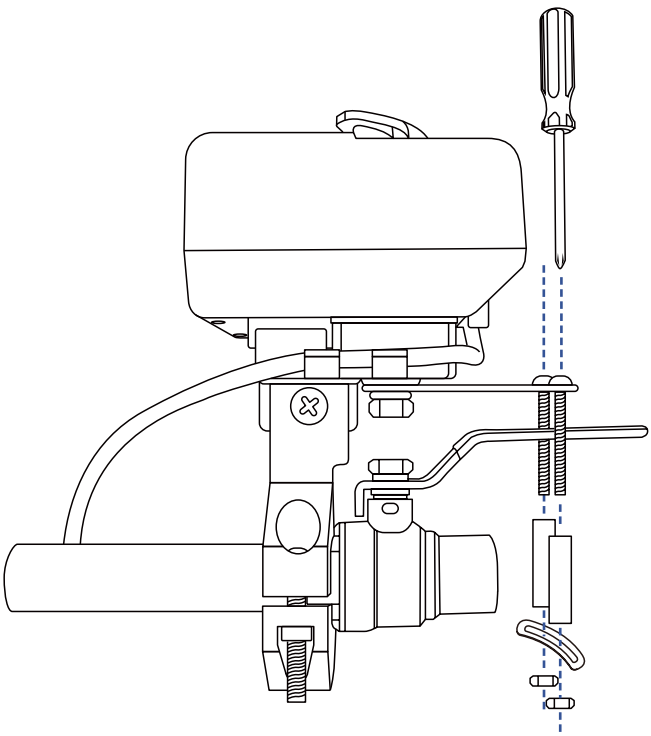

10. Put the collars back on the bolts. Holding them in place with one hand, insert the bottom supporting bracket over the end of each bolt, as shown. Insert and loosely tighten a nut on each bolt. Now, position each bolt/collar so that it is snug against the valve lever handle, with one on each side of the handle. Using a Phillips screwdriver, tighten the screw on each bolt/collar assembly, holding the nut in place, as needed. Confirm that each collar is snug against the handle.

L Final Connections

1. Connect the valve controller's valve control cable (2-pin) to the control cable of the Bulldog Valve Robot. Ensure the arrow of the cable connector aligns with the arrow of the other cable connector. Twist the collar of the connector tight.

2. Connect the valve controller's valve status cable (3-pin) to the valve status cable of the Bulldog Valve Robot. Ensure the arrow of the cable connector aligns with the arrow of the other cable connector. Twist the collar of the connector tight.

Use care to not connect a 2-pin connector to a 3-pin connector or vice versa. Never force two connectors together – the connectors should mate-up easily and not require force to tighten.

Manual Operation

It is recommended to always use the app or the valve controller SET button to operate the Bulldog Valve Robot. If you need to manually operate the Bulldog without using the app, you can press the SET button on the valve controller. If you need to operate the Bulldog Valve Robot without using the valve controller, you can do so by depressing the clutch pin as shown below. While depressing this pin, the motor and gears are disengaged from the ball valve, allowing it to be manually operated.

If you are not using the valve status feature or if your valve controller does not have the valve status feature, to avoid the app from indicating the wrong valve status, if you manually closed the valve, for example, manually open it again. Do not open it via the app, after manually closing it and vice versa, otherwise the app will incorrectly indicate the valve is closed.

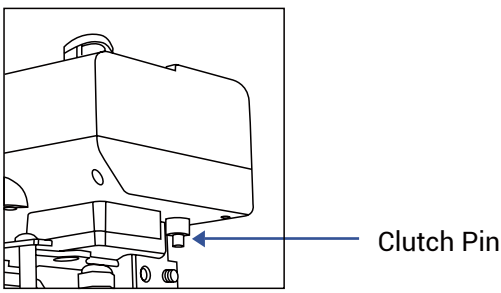

Do not attempt to move the ball valve without first depressing the clutch pin, as damage to the Bulldog may occur.

N Testing

1. Test the X3 Valve Controller and Bulldog Valve Robot by pressing the SET button on the controller, and by watching the closing or opening action of the Bulldog and the ball valve. The valve should open and close completely (verify no water is flowing through the valve while closed). Also, listen for an even sound of the motor operating. If the Bulldog sound increases or appears to be straining, this may indicate incorrect or suboptimal Bulldog installation and/or a mechanical issue with the ball valve (such as too stiff or too much resistance to turning). Return to the installation section, if needed.

2. Test the operation of the X3 Valve Controller from the app. From the **Rooms** or **Favorite** screen, locate your X3 Valve Controller, tap the image, then tap **Close** to turn off the water, and tap **Open** to turn it on.

Proceed to the next page for troubleshooting steps, otherwise go to page 38, Control-D2D Device-to-Device Pairing

0 Troubleshooting

Problem:

The valve controller is offline

Possible Solutions:

- Ensure the X3 Valve Controller is on. Repeat the Power Up section steps, if needed
- Replace the batteries

Problem:

The valve controller does not respond to the SET button being pressed and/or the Bulldog Valve Robot is unresponsive

Possible Solutions:

- Ensure the X3 Valve Controller is on. Repeat the Power Up section steps, if needed
- Double check the cable connectors for correct and tight connections
- Replace the batteries

Problem:

The Bulldog Valve Robot moves or slides off of the ball valve while in operation

Possible Solution:

- Ensure the Bulldog's bracket is mounted to the correct (non-round) part of the ball valve, and is tightly secured to the ball valve. Return to the installation section, if needed

Problem:

The Bulldog Valve Robot does not close the valve completely and/or appears to strain, shakes, or makes a loud and/or grinding noise while operating

Possible Solutions:

- Ensure the Bulldog's bracket is properly installed on the ball valve, and is tight
- Ensure the axis of the ball valve is aligned as much as possible with the axis of the Bulldog output shaft

P Get to Know Your Motorized Valve

The valve included in this kit is a 12V DC non-smart motorized valve. Use only this valve or YoLink-approved valve control products, such as the Bulldog Valve Robot. Do not use with non-YoLink valve products.

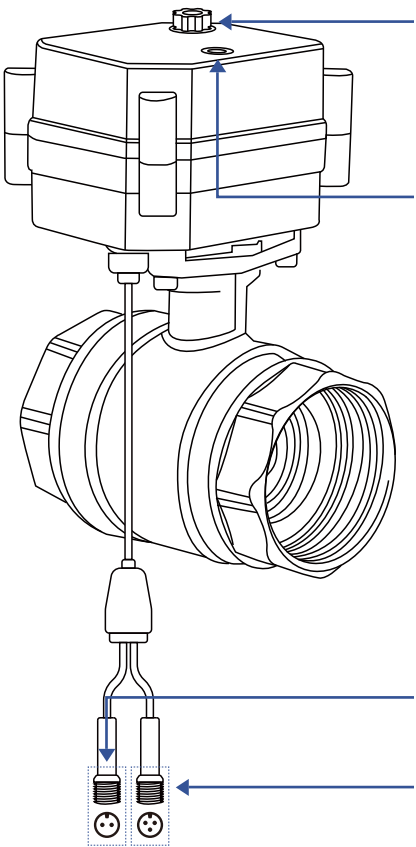

Manual Control Knob
Lift, then turn either clockwise to shut the valve or counterclockwise to open the valve

Valve Position Indicator
Window indicates the current position of the valve. "O" indicates open, "S" indicates shut

Valve Control Cable

Valve Status Cable
(Specific models: your valve may not have this cable)

Install the Motorized Valve

Preparing for installation:

Determine the installed location of your new motorized valve. Please consider these factors when choosing the location for the motorized valve:

- This location must be within reach of the cables of the X3 Valve Controller (see Install the X3 Valve Controller section, on page 12.
- Ensure that there is physical room for the valve, that other pipes, a wall or other objects will prevent installing it at the desired location.
- The manual control knob and Open/Shut indicator window should be visible and accessible.
- Please note, the valve can be installed in any orientation; sideways, inverted, etc.
- Local plumbing or building codes may require a non-electronic means of water shut-off. If this is the case, or if in doubt on the requirements, install the motorized valve in line (before or after) the existing shut-off valve (ball valve, etc.)

Q Install the Motorized Valve, Continued

1. Shut-off the water serving the pipe where the valve is to be installed. Drain the water from the pipe, by turning on a faucet, or by other method as required.

2. Depending on the adapter fitting used, measure the length of pipe that must be cut, and mark the cut lines on the pipe, as shown below.

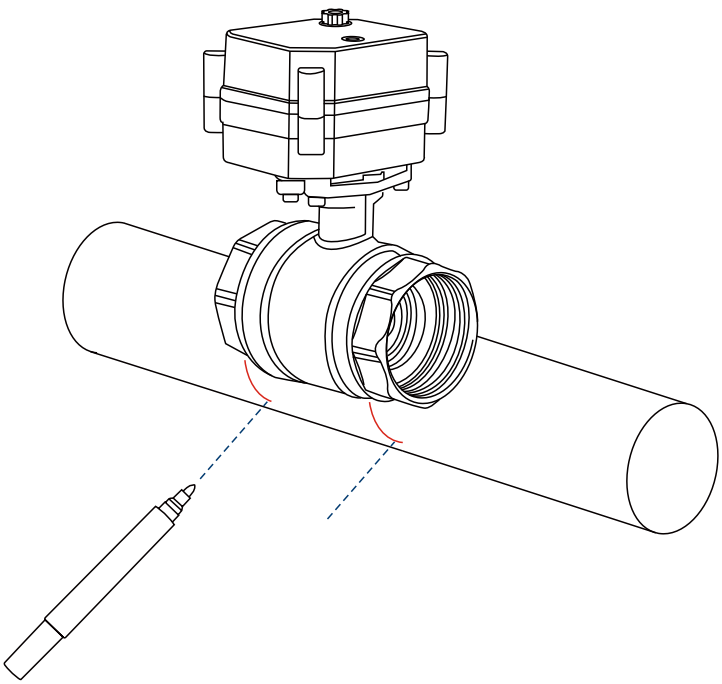

Install the Motorized Valve, Continued

3. Cut the water pipe through the mark using a pipe cutting tool, then remove the cut section of pipe, as shown below.

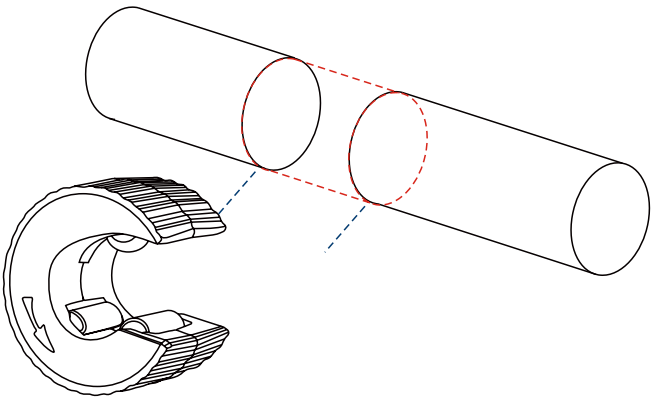

4. Sand both ends of cut pipe, removing any burrs or rough edges. Use care handling the cut edges, which may be sharp! Wipe off the cut section of pipe with a clean cloth.

5. Install your adapter fittings in the pipe ends, per the manufacturer instructions.

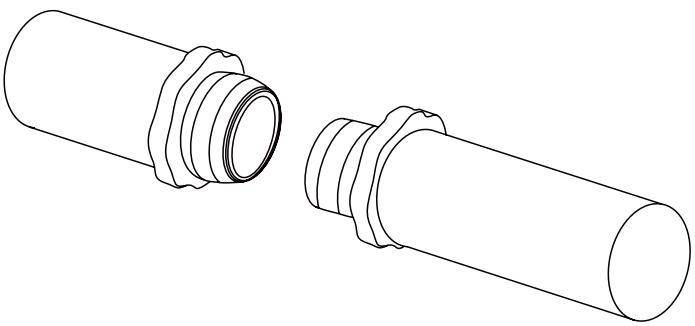

Q Install the Motorized Valve, Continued

6. Wrap each adapter's threaded end with thread seal tape, per the tape manufacturer's instructions, as shown below.

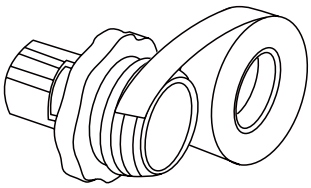

7. Install the Motorized Valve on the adapter fittings, ensuring a secure connection at each fitting, as shown below.

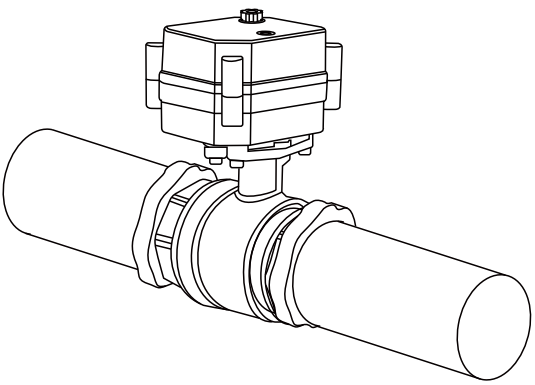

8. At the water valve or point of disconnection, turn the water on again.

9. Verify there are no leaks and no visible water on the motorized valve.

R Final Connections

1. Connect the valve controller's valve control cable (2-pin) to the control cable of the motorized valve. Ensure the arrow of the cable connector aligns with the arrow of the other cable connector. Twist the collar of the connector tight.

2. YS5003S, only: Connect the valve controller's valve status cable (3-pin) to the valve status cable of the motorized valve, if applicable. Ensure the arrow of the cable connector aligns with the arrow of the other cable connector. Twist the collar of the connector tight.

S Manual Operation

It is recommended to always use the app or the valve controller's SET button to operate your motorized valve.

Lift the knob on the top of the motorized valve and turn it by hand, until it can not be turned. Check the valve position indicator.

If you are not using the valve status feature or if your valve controller does not have the valve status feature, to avoid the app from indicating the wrong valve status, if you manually closed the valve, for example, manually open it again. Do not open it via the app, after manually closing it and vice versa, otherwise the app will incorrectly indicate the valve is closed.

T Testing

1. Test the X3 Valve Controller and motorized valve by pressing the SET button on the controller. Listen for a smooth even sound from the motorized valve. Once closed, ensure that no water is flowing through the valve (the water flowing through the valve may make an audible sound). Check that no water flows from an open faucet served by this valve.

2. Test the operation of the X3 Valve Controller from the app. From the **Rooms** or **Favorite** screen, locate your X3 Valve Controller, tap the image, then tap **Close** to turn off the water, and tap **Open** to turn it on.

U Troubleshooting

Problem:

The valve controller is offline

Possible Solutions:

- Ensure the X3 Valve Controller is on. Repeat the Power Up section steps, if needed
- Replace the batteries

Problem:

The valve controller does not respond to the SET button being pressed and/or the Motorized Valve Robot is unresponsive

Possible Solutions:

- Ensure the X3 Valve Controller is on. Repeat the Power Up section steps, if needed
- Double check the cable connectors for correct and tight connections
- Replace the batteries

Problem:

The valve is indicated as closed in the app, but it is actually open (or vice versa)

Possible Solution:

- Non-valve-status controllers only: disconnect the valve controller from the Motorized Valve. Manually operate the Motorized Valve, moving it to the open position if it was closed, and to the closed position if it was open. Reconnect the valve controller to the Motorized Valve. Test the Motorized Valve and valve controller from the app, and verify it is now correctly indicated as open or closed

V Control-D2D Device-to-Device Pairing

YoLink Control-D2D is our unique device-to-device control technology. Using Control-D2D, compatible YoLink devices can control or be controlled by other YoLink devices, without a hub or internet connection. One device can control another device, directly.

A device that controls or sends out commands is called the **controller**. A device that is controlled or receives the commands is called the **responder**. An example of a controller are a Water Leak Sensor, while examples of a responder are a Siren Alarm or a X3 Valve Controller.

Use of YoLink Control-D2D is optional.

One device can be Control-D2D-paired to up to 128 other devices.

Pairing is separate from the app and any automation, scenes or alarm strategies you may have configured in the app. Use care to not create automations that conflict with Control-D2D-pairing and vice-versa.

During pairing, the controlled device must be in the state (open, on, unlocked, etc.) that it should transfer to when signalled by the controller.

V Control-D2D Device-to-Device Pairing, Continued

Pairing

1. To configure a Water Leak Sensor 1 as a controller, press and hold the leak sensor's SET button for 5-10 seconds, until the LED quickly blinks green, then release the button.

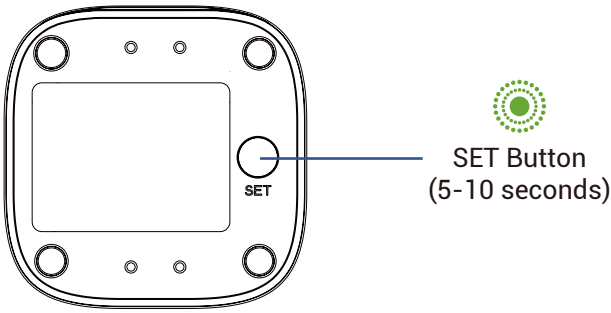

2. To configure the X3 Valve Controller as a responder, first ensure that the valve or Bulldog is in the closed position. Press and hold the controller's SET button for 5-10 seconds until the LED quickly blinks green, then release the button.

Upon pairing, the LED will stop blinking. This may happen after only blinking two or three times.

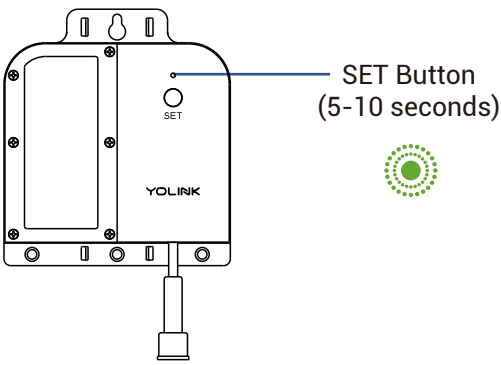

V Control-D2D Device-to-Device Pairing, Continued

Testing

1. Ensure the valve is in the normal (open) position.

2. Test the water leak sensor (if needed, refer to the sensor user guide for testing instructions).

3. Verify that the valve closes immediately when the leak sensor is activated.

Unpairing

1. At the Water Leak Sensor, press and hold the SET button for **10-15** seconds, until the LED quickly blinks green then red, then release the button.

2. At the X3 Valve Controller, press and hold the SET button for **10-15** seconds, until the LED quickly blinks green then red, then release the button.

Upon unpairing, either the Water Leak Sensor LED or the X3 Valve Controller LED will stop blinking and turn off.

At this time, you can test the leak sensor to confirm it no longer activates the valve controller. If you also have any automations or alarm strategies that may also control the valve controller, disable them before testing.

W Using the App & 3rd-Party Services

Please visit our website's Support page for the YoLink app guide and for product-specific app settings and instructions:

www.yosmart.com/support-and-service

X Factory Reset

Factory reset will erase device settings and restore it to factory default settings. Doing a factory reset will not remove the device from your account and it will not harm the device, or lose any data or require you to redo your automations, etc.

Instructions:

Hold the SET button down for 20-30 seconds, until the LED blinks red and green alternately. Then, release the button. (Holding the button down longer than 30 seconds will abort the factory reset operation)

Factory reset will be complete when the LED stops blinking.

Only deleting a device from the app will remove it from your account. Factory reset will not delete the device from the app.

Firmware Update

Your YoLink products are constantly being improved, with new features added. It is periodically necessary to make changes to your device's firmware. For optimal performance of your system, and to give you access to all available features for your devices, these firmware updates should be installed when they become available.

In the Detail screen of each device, at the bottom, you will see the Firmware section, as shown in the image below. A firmware update is available for your device if it says "#### ready now"

Tap in this area to start the update.

The device will update automatically, indicating progress by percentage-complete. You may use your device during the update, as the update is performed "in the background". The LED will slowly blink green during the update, and the update may continue for several minutes beyond the LED turning off.

Z Warnings

- Please install, operate and maintain the X3 Valve Controller (and Motorized Valve or Bulldog Valve Robot) only as outlined in this manual. Improper installation or use may damage the unit and/or void the warranty.

- Do not install or use the device outside of the temperature and humidity range listed in the environmental specifications.

- If used outdoors, for the maximum life of the device, provide overhead cover or a protective enclosure. This can protect it from the damaging effects of intense direct sunlight and/or rain over a period of years.

- Do not immerse or allow the devices to be immersed or submerged in water.

- Avoid placing the devices in extremely dirty or dusty environments.

- If the device does get dirty, please clean it by wiping it down with a clean dry cloth. Do not use strong chemicals or detergents, which may damage or discolor the exterior and/or damage the electronics, voiding the warranty.

- Do not install the device where it may be subjected to vandalism, abuse, physical impacts or strong vibrations. Physical damage is not covered by the warranty.

Z Warnings, Continued

- Power the controller only with new ER34615 lithium battery. Do not use rechargeable battery, do not use other type battery (e.g. zinc blend).

- If storing the controller for extended periods, remove the battery.

- Replace the battery only with one new ER34615 lithium battery. Do not use other types of batteries, such as zinc blend or rechargeable batteries.

Warranty

1 Year Limited Mechanical Device Warranty
2 Year Limited Electrical Device Warranty

YoSmart warrants to the original user of this product that it will be free from defects in materials and manufacturing workmanship, under normal use, for 1 year from the date of purchase for motorized valves and the Bulldog Valve Robot and for 2 years from the date of purchase for the X3 Valve Controller.

The warranty does not cover abuse or misused products, nor does this warranty apply to products that have been improperly installed, were modified, or put to a use other than designed. This warranty does not cover products subjected to acts of God (such as floods, lightning strike or electrical surge, or earthquakes, etc.).

This warranty is limited to repair or replacement of the product only at YoSmart's sole discretion. YoSmart will NOT be liable for any costs associated with removing or reinstalling the product. YoSmart will NOT be liable for direct or indirect or consequential damages to persons or property resulting from the use of this product.

The warranty only covers the cost of replacement products or parts. It does not cover shipping and handling charges or fees.

To implement this warranty, please refer to the Contact Us section of this guide.

AB FCC Statement

This equipment has been tested and found to comply with the limits for a Class B digital device, pursuant to part 15 of the FCC Rules. These limits are designed to provide reasonable protection against harmful interference in a residential installation. This equipment generates, uses and can radiate radio frequency energy and, if not installed and used in accordance with the instructions, may cause harmful interference to radio communications. However, there is no guarantee that interference will not occur in a particular installation. If this equipment does cause harmful interference to radio or television reception, which can be determined by turning the equipment off and on, the user is encouraged to try to correct the interference by one or more of the following measures: Reorient or relocate the receiving antenna, connect the equipment into an outlet on a circuit different from that to which the receiver is connected, increase the separation between the equipment and receiver, consult the dealer or an experienced radio/ TV technician for help.

This device complies with part 15 of the FCC Rules. Operation is subject to the following two conditions:

1) This device may not cause harmful interference
2) This device must accept any interference received, including interference that may cause undesired operation. Any changes or modifications not expressly approved by the party responsible for compliance could void the user's authority to operate the equipment.

To maintain compliance with FCC's RF Exposure guidelines, This equipment should be installed and operated with minimum 20cm distance between the radiator and your body: Use only the supplied antenna.

FCC Statement, Continued

PRODUCT NAME:
X3 Valve Controller

PARTY:
YOSMART, INC.

TELEPHONE:
831-292-4831

MODEL NUMBER:
YS7105-UC

ADDRESS:
15375 BARRANCA PKWY SUITE J-107, IRVINE, CA 92618 USA

EMAIL:
SERVICE@YOSMART.COM

AC Contact Us

We are here for you, if you ever need any assistance installing, setting up or using a YoLink app or product!

Need help? For fastest service, please email us 24/7 at **service@yosmart.com**

Or call us at **831-292-4831** (US phone support hours: **Monday - Friday, 9AM to 5PM** Pacific)

You can also find additional support and ways to contact us at:
www.yosmart.com/support-and-service

Or scan the QR code:

Support Home Page

Finally, if you have any feedback or suggestions for us, please email us at
feedback@yosmart.com

Thank you for trusting YoLink!

Eric Vanzo
Customer Experience Manager

YOLINK

15375 Barranca Parkway Ste. J-107 | Irvine, California 92618
© 2023 YOSMART, INC IRVINE, CALIFORNIA