CLIM8ZONE II – 120V
SPA HEAT PUMP

User and Service manual

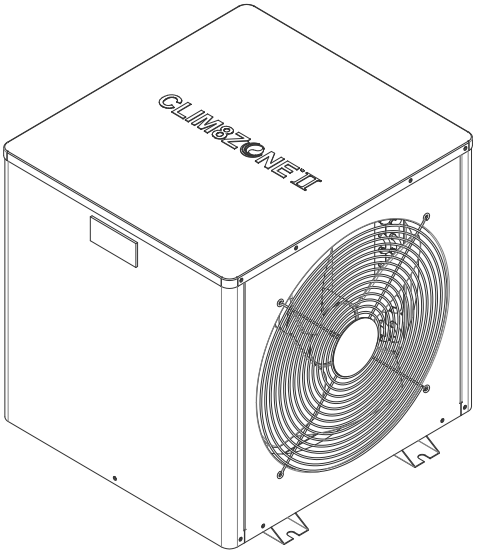

Spa Heat Pump
User and Service Manual (standalone mode)

INDEX

1. Specifications
2. Dimension
3. Installation and connections
4. Electrical Wiring
5. Controller Panel Operation
6. Wifi Connection and Operation
7. Maintenance

IMPORTANT SAFETY INSTRUCTIONS

READ AND FOLLOW ALL INSTRUCTIONS

This manual contains all the necessary information for the use and installation of your heat pump

1. To ensure personal safety and prevent equipment damage, it is important to follow all safety instructions provided on the equipment and within this manual.
2. The installer must read the manual carefully and follow the instructions for installation and maintenance. The installer is responsible for the product's installation and should follow all the manufacturer's instructions and applicable regulations.
3. The manufacturer is not responsible for any damage caused to people, objects, or errors resulting from installation that disregards the manual guidelines.
4. Any use that does not conform to the product's original manufacturing is considered hazardous.
5. The warranty may become void if the equipment is not installed, maintained, or serviced properly. Improper installation contrary to the manual will void the entire warranty.
6. Any use that does not conform to the product's original manufacturing is considered hazardous.
7. Any repair or service of the heat pump should only be carried out by an authorized service center.
8. In case of necessary service, please get in touch with your local sales representative.

SAFETY SIGNALS:

This document contains safety signals placed where specific attention is necessary.

DANGER: Disregarding the following instructions will result in serious injury or even death.

WARNING: Disregarding the following instructions can result in serious injury or even death.

NOTICE: Disregarding the following instructions can result in damage to your heat pump.

When installing and using your heat pump, it is crucial to always follow basic safety precautions. Please take note of the following warnings to ensure the safety of yourself and others.

<u>DANGERS</u>: Disregarding the following instructions will result in serious injury or even death

- The heat pump utilizes high voltage and rotating equipment, so use caution when servicing.
- Always turn off the power supply before opening the cabinet to access the interior of the heat pump, as there is high voltage electricity inside.
- This heat pump is equipped with variable frequency compressor drive store electricity even after the power has been deactivated at the power breaker. Wait for 5 minutes after the shutdown of equipment before servicing.
- Follow all National Electric Codes (NEC) and CEC or State and Local guidelines.

<u>WARNINGS</u>: Disregarding the following instructions can result in serious injury or even death.

- Installation and repairs must be performed by a qualified technician.
- The heat pump contains refrigerant under pressure. Repairs to the refrigerant circuit must not be attempted by untrained and/or unqualified individuals. Service must be performed only by qualified HVAC technicians. Recover refrigerant before opening the system.
- Improper water chemistry can present a serious health hazard. To avoid possible hazards, maintain pool/spa water per standards as detailed in hot tub or spa manual instructions.
- Prolonged immersion in water warmer than normal body temperature may cause a condition known as Hyperthermia. People having an adverse medical history or pregnant women should consult a physician before using a hot tub or spa. Children and the elderly should be supervised by a responsible adult.
- Prolonged immersion in water colder than normal body temperature may cause a condition known as Hypothermia. Persons having an adverse medical history or pregnant women should consult a physician before immersing in a cold body of water. Children and the elderly should be supervised by a responsible adult.
- Do not use any methods to speed up the defrosting process or for cleaning, other than those recommended by the manufacturer. The appliance must be stored in a room without continuously operating ignition sources, such as open flames, operating gas appliances, or operating electric heaters. Do not puncture or burn the appliance. It is recommended to install the unit outdoors. If it must be installed indoors, ensure that ventilation is adequate. Please note that refrigerants may not have an odor.

<u>NOTICES</u>: Disregarding the following instructions can result in damage to your heat pump.

- Maintain proper water chemistry to avoid damage to the pump, filter, hot tub or spa shell, etc.
- Water flow exceeding the maximum flow rate requires a bypass. Damage due to excessive water flow will void the warranty.
- Please ensure to keep the display controller in a dry area to prevent it from being damaged by humidity.
- Always remember to drain the water from the heat pump during winterization. Failure to do so may result in damage to the Titanium exchanger due to freezing, which will void your warranty.

WARNING: Installation must be performed in accordance with the NEC/CEC and local code by an authorized person only.

WARNING: Make sure the switch is turned to the power off position before install the heat pump or maintenance the heat pump

WARNING: To reduce the risk of injury, this appliance is not intended for use by persons (including children) with reduced physical, sensory, or mental capabilities, or lack of experience and knowledge, unless they have been given supervision or instruction concerning use of the appliance by a person responsible for their safety at all times. Children should be supervised to ensure that they do not play with the appliance.

WARNING: A wire connector is provided on this unit to connect a minimum 6 AWG (13.3 mm2) solid copper conductor between this unit and any metal equipment, metal enclosures of electrical equipment, metal water pipe, or conduit within 5 feet (1.5 m) of the unit.

WARNING: A terminal marked G, GR, Ground, Grounding, or the symbol ⏚ is located inside the supply terminal box or compartment. To reduce the risk of electric shock, this terminal must be connected to the grounding means provided in the electric supply service panel with a continuous copper wire equivalent in size to the circuit conductors supplying this equipment.

WARNING: All field-installed metal components such as rails, ladders, drains, or other similar hardware within 3 m of the spa or hot tub shall be bonded to the equipment grounding bus with copper conductors not smaller than No. 6 AWG (13.3 mm2).

WARNING: DO NOT USE SPAS OR HOT TUBS UNLESS ALL SUCTION GUARDS ARE INSTALLED TO PREVENT BODY AND HAIR ENTRAPMENT

WARNING: TO AVOID INJURY, EXERCISE CARE WHEN ENTERING OR EXITING THE SPA OR HOT TUB.

WARNING: PREGNANT OR POSSIBLY PREGNANT WOMEN SHOULD CONSULT A PHYSICIAN BEFORE USING A SPA OR HOT TUB.

WARNING: DO NOT USE A SPA OR HOT TUB IMMEDIATELY FOLLOWING STRENUOUS EXERCISE.

WARNING: PROLONGED IMMERSION IN A SPA OR HOT TUB CAN BE INJURIOUS TO YOUR HEALTH.

CAUTION: MAINTAIN WATER CHEMISTRY IN ACCORDANCE WITH MANUFACTURER'S INSTRUCTIONS.

DANGER**:** Risk of Accidental Drowning. Extreme caution must be exercised to prevent unauthorized access by children. To avoid accidents, ensure that children cannot use a spa or hot tub unless they are closely supervised at all times.

DANGER – Risk of Injury. The suction fittings in this spa are sized to match the specific water flow created by the pump. Should the need arise to replace the suction fittings or the pump, be sure that the flow rates are compatible.
Never operate spa if the suction fittings are broken or missing. Never replace a suction fitting with one rated less than the flow rate marked on the original suction fitting.

DANGER**:** Risk of Electric Shock. Install at least 5 feet (1.5 m) from inside wall of hot tub or spa using nonmetallic plumbing.

DANGER – Risk of Electric Shock. Install at least 5 feet (1.5 m) from all metal surfaces. As an alternative, a spa may be installed within 5 feet of metal surfaces if each metal surface is permanently connected by a minimum 6 AWG (13.3 mm2) solid copper conductor to the wire connector on the terminal box that is provided for this purpose.

DANGER – Risk of Electric Shock. Do not permit any electric appliance, such as a light, telephone, radio, or television, within 5 feet (1.5 m) of a spa.

WARNING – To reduce the risk of injury:

- a) The water in a spa should never exceed 40° C (104° F). Water temperatures between 38°C (100°F) and 40°C are considered safe for a healthy adult. Lower water temperatures are recommended for young children and when spa use exceeds 10 minutes.
- b) Since excessive water temperatures have a high potential for causing fetal damage during the early months of pregnancy, pregnant or possibly pregnant women should limit spa water temperatures to 38°C (100°F).
- c) Before entering a spa or hot tub, the user should measure the water temperature since the tolerance of water temperature-regulating devices varies.
- d) The use of alcohol, drugs, or medication before or during spa or hot tub use may lead to unconsciousness with the possibility of drowning.
- e) Obese persons and persons with a history of heart disease, low or high blood pressure, circulatory system problems, or diabetes should consult a physician before using a spa.
- f) Persons using medication should consult a physician before using a spa or hot tub since some medication may induce drowsiness while other medication may affect heart rate, blood pressure, and circulation.

Caution: The user is cautioned that changes or modifications not expressly approved by the party responsible for compliance could void the user's authority to operate the equipment.

This device contains licence-exempt transmitter(s)/receiver(s) that comply with Innovation, Science and Economic Development Canada's licence-exempt RSS(s) and Part 15 of the FCC Rules. Operation is subject to the following two conditions:
(1) This device may not cause harmful interference.
(2) This device must accept any interference, including interference that may cause undesired operation
L'émetteur/récepteur exempt de licence contenu dans le présent appareil est conforme aux CNR d'Innovation, Sciences et Développement économique Canada applicables aux appareils radio exempts de licence. L'exploitation est autorisée aux deux conditions suivantes :
(1) L'appareil ne doit pas produire de brouillage;
(2) L'appareil doit accepter tout brouillage radioélectrique subi, même si le brouillage est susceptible d'en compromettre le fonctionnement.

Caution:The manufacturer is not responsible for any radio or tv interference causeld by unauthorized modifications or change to this equi pment. such modifications or change could void the user's authority to operate the equipment.

NOTE: This equipment has been tested and found to comply with the limits for a Class B digital device, pursuant to Part 15 of the FCC Rules. These limits are designed to provide reasonable protection against harmful interference in a residential installation. This equipment generates, uses and can radiate radio frequency energy and, if not installed and used in accordance with the instructions, may cause harmful interference to radio communications. However, there is no guarantee that interference will not occur in a particular installation.

If this equipment does cause harmful interference to radio or television reception, which can be determined by turning the equipment off and on, the user is encouraged to try to correct the interference by one or more of the following measures:

-- Reorient or relocate the receiving antenna.

-- Increase the separation between the equipment and receiver.

-- Connect the equipment into an outlet on a circuit different from that to which the receiver is connected.

-- Consult the dealer or an experienced radio/TV technician for help.

FCC& IC Radiation Exposure Statement:

This equipment complies with FCC and Canada radiation exposure limits set forth for an uncontrolled environment. This equipment should be installed and operated with a minimum distance of 20cm between the radiator and your body.

This transmitter must not be co-located or operating in conjunction with any other antenna or transmitter.

Déclaration d'IC sur l'exposition aux radiations:

Cet équipement est conforme aux limites d'exposition aux radiations définies par le Canada pour des environnements non contrôlés. Cet équipement doit être installé et utilisé à une distance minimum de 20 cm entre l'antenne et votre corps.

Cet émetteur ne doit pas être installé au même endroit ni utilisé avec une autre antenne ou un autre émetteur.

SAVE THESE INSTRUCTIONS

⚠ WARNING

REDUCE THE RISK OF ELECTROCUTION

1. Never place an electric appliance within 5 feet of spa.

REDUCE THE RISK OF CHILD DROWNING

1. Supervise children at all times.
2. Attach spa cover after each use.

REDUCE THE RISK OF OVERHEATING

1. Check with a doctor before use if pregnant, diabetic, in poor health, or under medical care.
2. Exit immediately if uncomfortable, dizzy, or sleepy. Spa heat can cause hyperthermia and unconsciousness.
3. Spa heat in conjunction with alcohol, drugs, or medication can cause unconsciousness.

WHEN PREGNANT , soaking in hot water for long periods can harm your fetus. Measure water temperature before entering.

1. Do not enter spa if water is hotter than 100° F (38° C).
2. Do not stay in spa for longer than 10 minutes.

1. Specifications

1.1 Technical data

120V Clim8zone II – Compact Heat Pump for Spas			
Product model			C8ZII-120V
Advised maximum spa volume（gallons / with cover)			600
Heating operating ambient temperature range（°F）			23 ~109
Cooling operating ambient temperature range（°F）			50~104
Operating water temperature(℃) heating			15~40
Operating water temperature(℃) cooling			5~35
Parameters	heating*	Heating capacity (kW)	4.0~1.0
		Heating capacity (BTU/h)	13600~3400
		Input power (kW)	0.8~0.11
		COP	5.0~9.5
	heating**	Heating capacity (kW)	2.5~0.65
		Heating capacity (BTU/h)	8500~2210
		Input power (kW)	0.6~0.1
		COP	4.0~6.1
	Cooling capacity (kW)		1.6
	Maximum current (A)		10.5
	Advised water flow（GPM）		7.5
	IP Grade (Level of protection)		IPX4
	Anti-electric shock Rate		I
	Noise (dB(A)) in 1 meter		≤45
	Net weight/Gross weight(lbs)		62/67
	Diameter of pipe (inch)		1.5” socket
Standard Configuration	Metal plate		Metal Casing
	Body size(W*D*H) (inch)		19.5 x 19.6 x 19.1
	Refrigerant		R410A/350g
	Power supply		120V/1 Ph/60Hz
	Condenser		Titanium in PVC
Remark: heating*: working condition, Inlet water temperature 78.8°F, Outlet water temperature 82.4°F, Dry bulb temperature 80.6°F. Humidity 80%. heating**: working condition, Inlet water temperature 78.8°F Outlet water temperature 82.4°F Dry bulb temperature 59°F Humidity 70%. Cooling: working condition, Inlet water temperature 82.4°F Dry bulb temperature 95°F Humidity 80%.			

2. Dimension (mm)

2.1

unit: mm

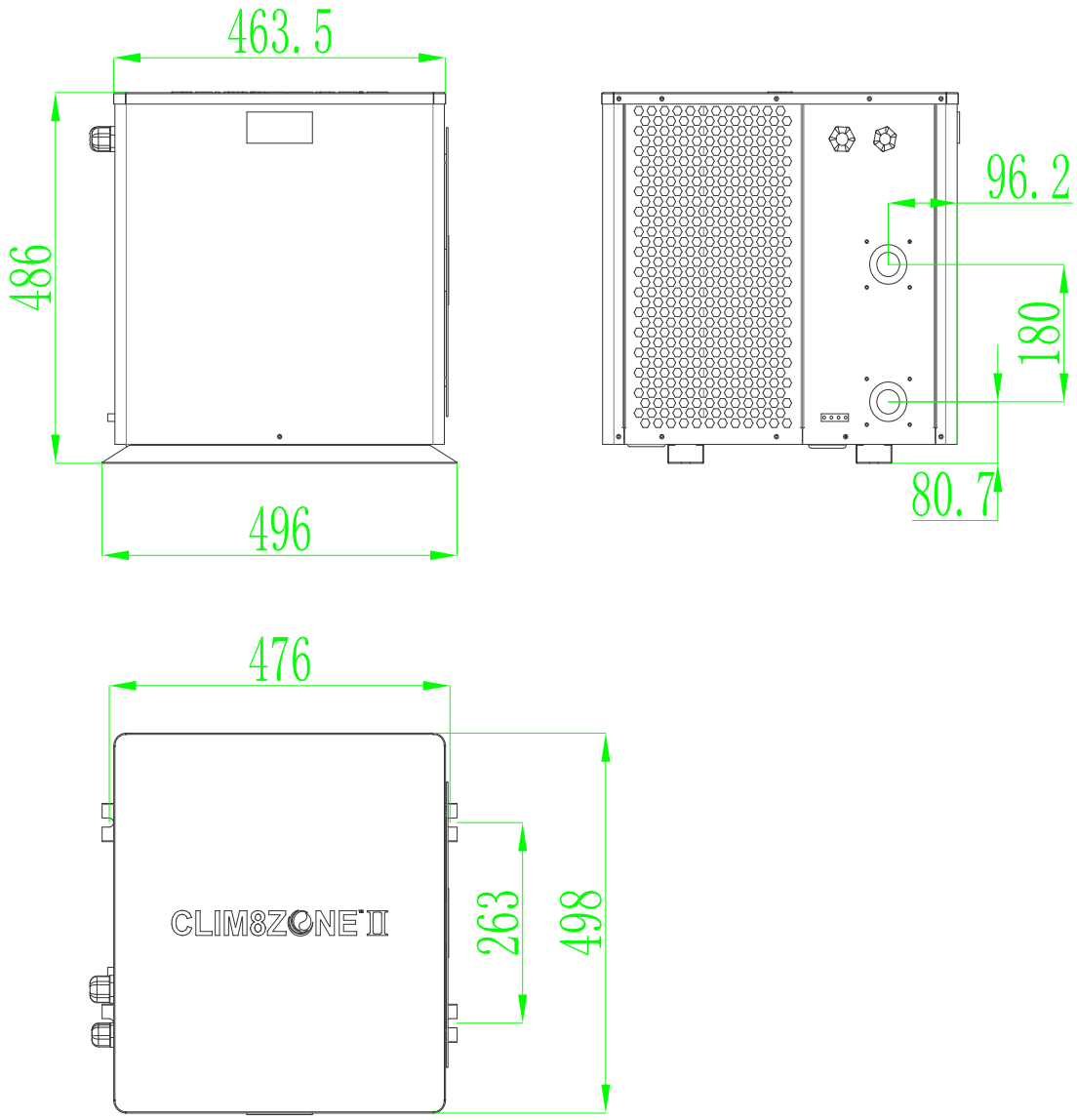

2.2 Exploded View

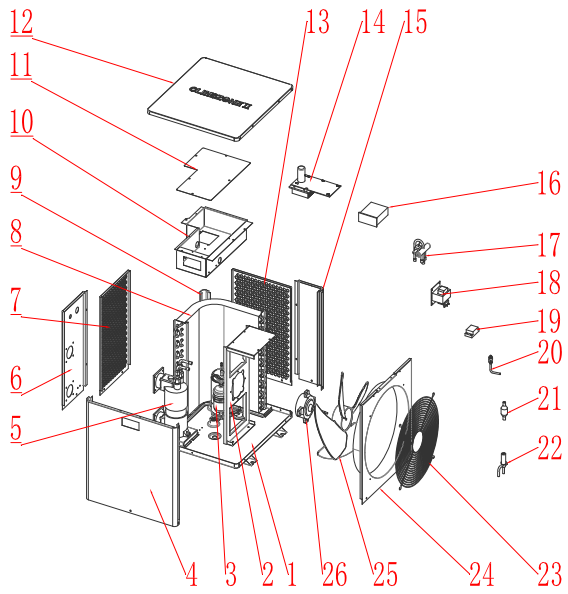

NO	Spare parts	NO	Spare parts
1	chassis	21	filter
2	motor bracket	22	electronic expansion valve
3	compressor	23	fan network
4	front panel	24	air deflector
5	titanium tube heat exchanger	25	fan blade
6	left side panel	26	motor
7	left net		
8	fin heat exchanger		
9	column		
10	electric box		
11	electric box cover		
12	top panel		
13	back net		
14	driver board		
15	rear side panel		
16	control board		
17	4-way valve		
18	reactor		
19	transfer terminal block		
20	needle valve		

3. Installation and connections

3.1 Notes

The factory supplies only the heat pump. All other components must be provided by the user or the installer.
Install a bypass if the water flow from the water pump is more than 20% greater than the allowable flow through the heat exchanger of the heat pump.
Always place the heat pump on a solid foundation and use the included rubber mounts to avoid vibration and noise.
Always hold the heat pump upright. If the unit has been held at an angle, wait at least 24 hours before starting the heat pump.

3.2 Heat pump location

The unit will work properly in any desired location as long as the following three items are present:

1. Fresh air – 2. Electricity – 3. Adequate water flow

The unit may be installed in virtually any **outdoor** location as long as the specified minimum distances to other objects are maintained (see drawing below). To protect the unit from snow and rain, it is suggested to add an open sides shed cover over the heat pump. Please consult your installer for installation with an indoor spa. Installation in a windy location does not present any problem at all, unlike the situation with a gas heater (including pilot flame problems).

ATTENTION:
Never install the unit in a closed room with a limited air volume in which the air expelled from the unit will be reused, or close to shrubbery that could block the air inlet. Such locations impair the continuous supply of fresh air, resulting in reduced efficiency and possibly preventing sufficient heat output.
See the drawing below for minimum dimensions.

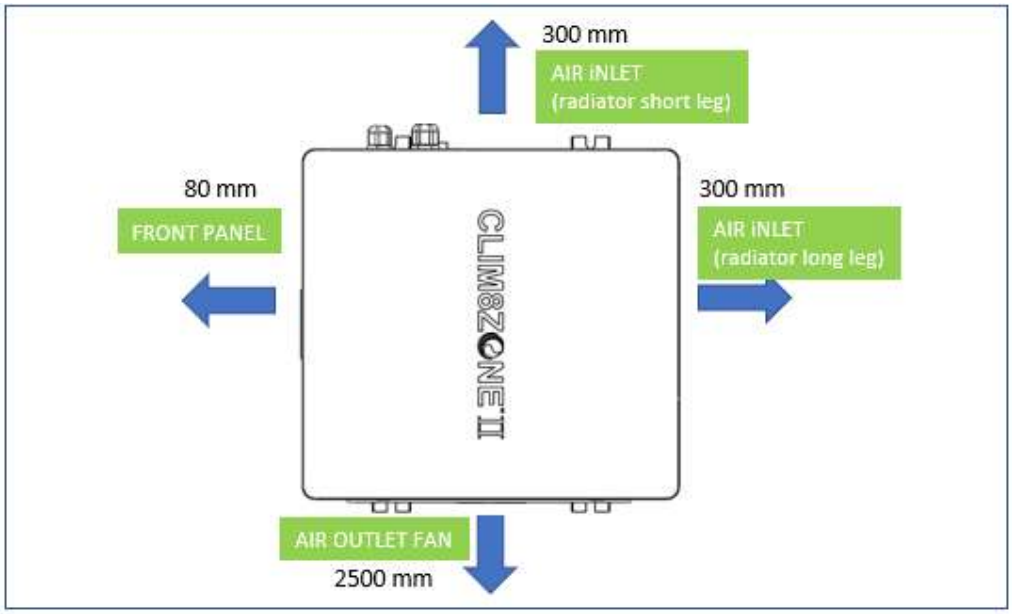

3.3 Distance from your spa

The heat pump is normally installed within a perimeter area extending 2m (6.5ft) from the spa. To minimize heat lost, it is recommended to add insulations over the pipes connecting the heat pump and the spa.

3.4 Plumbing Connections

3.4.1 Plumbing diagram

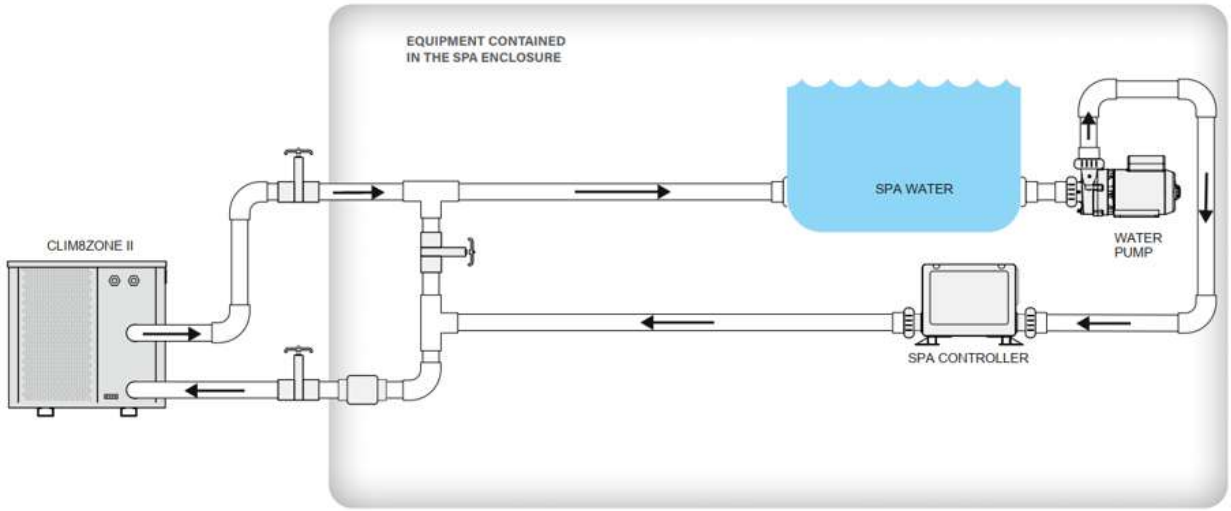

3.4.2 Check-valve installation (recommended)

If automatic dosing equipment for chlorine and acidity (pH) is used, it is essential to protect the heat pump against excessively high chemical concentrations which may corrode the heat exchanger. For this reason, equipment of this sort must always be fitted in the piping on the **downstream** side of the heat pump, and it is recommended to install a check-valve to prevent reverse flow in the absence of water circulation.

Damage to the heat pump caused by failure to follow this instruction is not covered by the warranty.

3.5 Electrical connection

DANGER: Electrical connections below must be done by a qualified and licensed electrician. Failure to do so injury or death may occur.

1. Turn the spa breaker to OFF position before making electrical connection.
2. Make sure electrical ratings of the power source match with the electrical ratings marked on the label of this unit.
3. Attention: This unit is provided with a grounding lug and must be electrically bonded to the spa common bonding grid. Connect the grounding lug with the spa common bonding grid with a #8 minimum solid copper wire.
4. Power to this unit must be supplied through a GFCI having a rated residual operating current not exceeding 5mA.
5. Connect the unit to 120VAC AV port of the spa controller. A splitter (PN 22934, not included) may be needed if the AV port is being used for other equipment.
6. If a spa controller is not used, the unit may be hard wired to 120VAC power supply panel and must be done by a licensed electrician. The unit may also be plugged into a dedicated 120VAC power supply junction box.

3.6 Initial operation

Note: In order for the heat pump to operate, the water circulating pump must be running to cause the water to circulate through the heat pump. The heat pump will not start up if the water is not circulating.

After all connections have been made and checked, follow the following procedure:

1. Switch on the water circulating pump. Check for leaks and verify that water is flowing from and to the spa.
2. Switch on power to the heat pump.

3. Press the ⏻ Power button on front panel for 2 seconds.

4. Set the unit to Heat or Cool mode by pressing the Ⓜ Mode button. Heating = Red LED on. Cooling = Green LED on.

5. Set temperature by pressing ▲ Up or ▼ Down buttons.

6. The unit will start up after the time delay expires.
7. After a few minutes, air will be blowing out of the fan grill.
8. Complete!

Time delay - The heat pump has a built-in 3-minute start-up delay to protect the circuitry and avoid excessive contact wear. The unit will restart automatically after this time delay expires. Even a brief power interruption will trigger this time delay and prevent the unit from restarting immediately. Additional power interruptions during this delay period do not affect the 3-minute duration of the delay.

3.7 Condensation

In heat mode, the air drawn into the heat pump is greatly cooled by the operation of the heat pump for heating the spa water, which may cause condensation on the fins of the evaporator. The amount of condensation may be as much as several litters per hour at high relative humidity. This is condensation water, not leaked water.

4. Electrical Wiring

4.1 CLIM8ZONE II HEAT PUMP WIRING DIADRAM

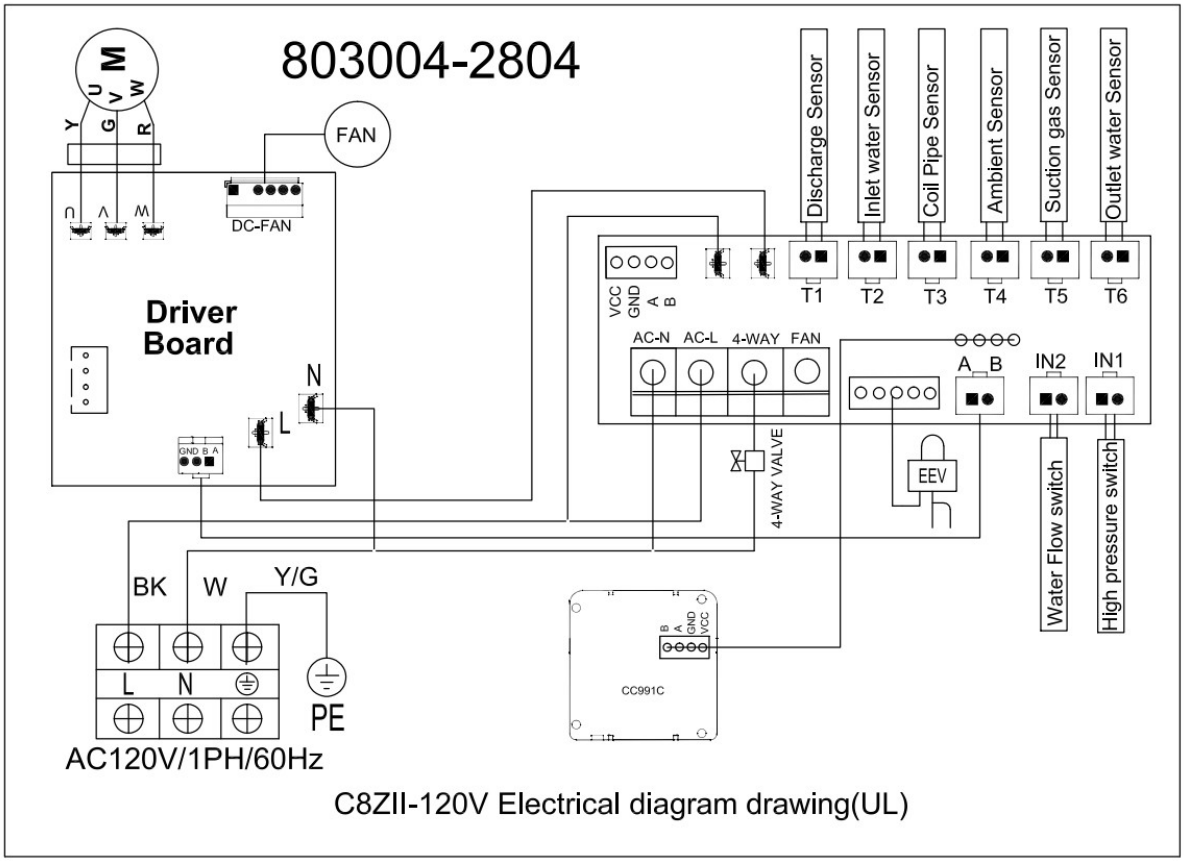

C8ZII-120V Electrical diagram drawing(UL)

5. Controller Panel Operation

5.1 Controller Panel Display:

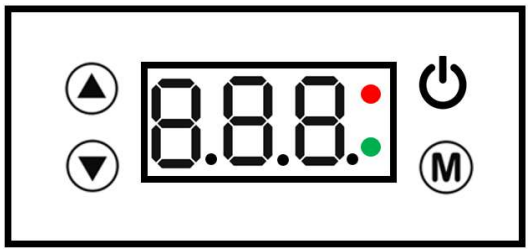

5.2 Button Descriptions:

No	Key	Description
1	⏻	Turn ON/OFF the controller panel
2	▲	Increase the setting values.
3	▼	Decrease the setting values.
4	Ⓜ	Change modes.
5	**Red LED On**	Heating mode
6	**Green LED On**	Cooling mode
7	**The red light and the green light on for 3 seconds at the same time, then the red light on**	Automatic heating
8	**The red light and the green light on for 3 seconds at the same time, then the green light on**	Automatic cooling
9	**Red LED flashing**	Defrosting mode
10	**Red & Green LED Off**	Heat pump OFF

5.3 Operation Instruction:

1. Turn ON/OFF

   Press the ⏻ button for 2 seconds.

2. Mode conversion

   Press Ⓜ button to switch heat / cooling mode; Heating =Red LED On ; Cooling = Green LED On.

3. Change temperature unit Fahrenheit/Celsius

Long press three buttons Ⓜ + ▲ + ▼ at the same time to switch the display of Fahrenheit and Celsius.

4. Forced defrosting

When the outer coil pipe temperature is below the Exit Defrosting Temperature, press two buttons Ⓜ + ▼ for 3 seconds to enter the Forced Defrosting.

5. Change Set Temperatures:

Set temperatures can be adjusted by pressing Up ▲ or ▼ Down buttons.

6. Status Query

To enter the unit status query, press ▼ button for 3 seconds to view the temperature parameters. See table below.

Status Query Table

Query code	Meaning	Display the range
A01	Inlet water temp.	-30~99℃
A02	Outlet water temp.	-30~99℃
A03	Ambient temp.	-30~99℃
A04	Exhaust temp.	0~125℃
A05	Return gas temp.	-30~99℃
A06	Outer coil temp.	-30~99℃
A08	Electronic expansion valve opening degree	0~480
A10	Compressor current	
A11	Heat-sink temperature	
A12	DC bus voltage value	
A13	Actual compressor speed	
A14	Total main board current	
A15	DC fan speed	0~1590
A16	**Unit operation mode**	**0：AP* mode/1: BP** mode**

* AP = Standalone; ** BP = Integrated with Balboa BP Spa Controller

7. Change Unit operation mode

Long press two buttons ⏻ and ▲ for 15 seconds at the same time to switch between AP and BP modes; A16: = 0 heat pump operates in AP mode; A16 = 1: heat pump operates in BP mode.

5.4. Query and setting of the system parameters

Query: Press ▲ button for 3 seconds to enter the parameter query state. Press ▲ or ▼ button to switch from one parameter to another. Press Ⓜ button to view the value of the parameter. Press ⏻ button to return and exit the query.

Modify: To modify the parameter, a password will be needed. The password is 68. Follow the below procedure:

- Long press Ⓜ and ▲ button to enter the input password interface,
- Press Ⓜ button to enter the first password digit "6" by pressing ▲ or ▼ buttons,

- Press Ⓜ button to advance to the second password digit and enter "8" by pressing ▲ or ▼ buttons,
- Press Ⓜ button to submit the password. After entering, select or change parameters by using ▲ or ▼ buttons
- Press Ⓜ button to make entry changes or confirm and return to the viewing status.

System parameter table

Parameter code	Parameter name	Adjust range	Default value
P01	Return Difference for Target Water Temp.	1℃~18℃	1℃(2°F)
P02	Reserved	--	--
P03	**Setting temp. In automatic mode**	**5℃~40℃**	27℃(40°F)
P04	Cooling setting temp.	8℃~28℃	27℃(81°F)
P05	Heating setting temp.	15℃~40℃	27℃(79°F)
P06=TP4	The setting temp. that Exhaust temp. too high protection	80℃~125℃	110℃(230°F)
P07=TP0	Recover The setting temp. from the too high exhaust temp.	50℃~100℃	90℃(194°F)
P08	Compressor current protection	2A~50A	Reserved--Without this function
P09	Inlet water temp. compensation	-5℃~15℃	0℃(0°F)
P10	Reserved	--	--
P11	Defrosting cycle	20MIN~90MIN	40MIN
P12	Defrosting enters the temp.	-15℃~-1℃	-3℃(27°F)
P13	Defrosting time	2MIN~20MIN	5MIN
P14	Desrosting exit temperature	1℃~40℃	18℃(64°F)
P15	Temp. difference between defrosting environment and coil pipe	0℃~15℃	5℃(10°F)
P16	Ambient temperature of the defrosting	0℃~20℃	17℃(63°F)
P17	Expansion valve cycle	20-90	30
P18	Overheat Degree in Heating Mode	-5-10	3

P19	Main valve set exhaust gas	70-125	95
P20	Main valve defrosting opening degree	2-45	30
P21	Minimum opening degree of the main valve	5-15	8
P22	Expansion valve mode	0 Manual / 1 Automatic	1
P23	Manual steps of the main valve	2-45	35
P24	Cooling opening degree of the main valve	2-45	30

5.5. Error Code table:

Error code	Error description	description	Solution suggestion
E03	Water flow failure	1. The water flow switch fault 2. Low water flow 3. The inlet and outlet water are reversed 4. There is air in the pipe 5. The pipe blocked	1.Check the water flow switch and replace it if it is faulty 2.Check the water valve and the temperature difference between inlet and outlet water 3.Whether the inlet and outlet water pipes are correctly connected 4.Emptying 5.Pipe cleaning
E04	winter anti-freezing	The ambient temperature is lower than the antifreeze setting value	Normal protection procedure
E05	High pressure protection	1. Low water flow 2.. Pressure switch fault 3. The fan motor unwork or the speed too low 4.Overcharged the refrigerant	1. Check whether the temperature difference between inlet and outlet water is too large, and whether the outlet water temperature is too high 2. Use a multimeter to check whether the high voltage protection switch works 3. Check the water flow of the water pump and the speed of the fan 4. Refill the refrigerant
E10	Communication fault of	1. The main board or driver	1. Replace the main board or driver board

	frequency conversion module (alarm when communication is disconnected between external board and drive board)	board damaged 2. The connector of the communication cable between the main board and the driver board is in poor contact or falls off 3. The communication cable is damaged	2. Check the communication cables between the main board and driver board 3. Replace the communication cable
E12	Exhaust too high protection	1. Less refrigerant or leakage 2. The system blocked 3. Compressor refrigerant oil is insufficient 4. The resistance value of the exhaust probe is offset, and the inlet temperature probe is dropped	1. Refill the refrigerant 2. Replace the filter 3. Add refrigerant oil to the compressor 4. Replace the exhaust probe and reconnect the water inlet temperature probe
E15	Inlet water temp. Error	The sensor plug is in poor contact or off, or the sensor is damaged	Check and replace the water inlet temperature sensor(T2 sensor)
E16	Outer coil pipe temp. Error	The sensor plug is in poor contact or off, or the sensor is damaged	Check and replace the coil pipe temperature sensor(T3)
E18	Exhaust gas temp. Error	The sensor plug is in poor contact or off, or the sensor is damaged	Check and replace the exhaust gas temperature sensor(T1)
E20	Abnormal protection of frequency conversion module	IPM module internal fault, check related problems according to the attached table	
E21	Ambient temp. Error	The sensor plug is in poor contact or off, or the sensor is damaged	Check and replace the ambient temperature sensor(T4)
E23	Too low cooling outlet water temp protection	Outlet water temp lower than 2℃	Check whether the water flow or water system is jammed or not
E27	Outlet temperature fault	The sensor plug is in poor contact or off, or the sensor is damaged	Check and replace the water outlet temperature sensor(T6)
E29	Return gas temp. Error	The sensor plug is in poor contact or off, or the sensor is damaged	Check and replace the suction gas sensor(T5)
E46	DC Fan Error	1.Dc fan failure 2.Plug is in poor contact or off	1. Replace the DC fan 2. Reconnect cables to the DC fan

E20 fault will display the following error codes at the same time, the error codes will switch every 3 seconds. Among them, error codes 1-128 are displayed in priority.

When error codes 1-128 don’ t appear, then error codes 257-384 can show.

If two or more error codes appear at the same time, then display error codes accumulation.
For example, 16 and 32 occur at the same time, display 48

Error Code	name	description	Solution suggestion
1	IPM Over-current	1. The IPM overloaded or overheated 2. The U,V,W driver short-circuited 3. The IPM module fault 4. The compressor damaged	1 Ensure that the ring temperature, water temperature, water flow, etc. are within the operating range of the unit; 2. Use a multimeter to measure the motor U,V,W in ohmic gear to ensure no short circuit 3. Replace the frequency conversion module 4. Replace the compressor
2	compressor synchronous abnormal	1. The compressor overloaded instantaneously 2. The compressor does not match the program 3. The difference between high and low pressure starts the compressor excessively	1 Ensure that the ring temperature, water temperature, water flow, etc. are within the operating range of the unit; 2. Replace the driver board with the correct program 3. Ensure that the high and low pressure difference starts normally
8	compressor output phase absent	1. The U, V, and W cables of the compressor are missing or improperly connected 2. The compressor does not match the program 3. The difference between high and low pressure starts the compressor excessively	1. Check whether the U, V, and W wires of the compressor are missing or in poor contact 2. Update the driver 3. Ensure that the high and low pressure difference starts normally
16	DC bus low voltage	1. The power supply unstable 2.AC suddenly power off, the inverter capacitor residual power supply chip detects that the DC voltage will be too low 3. The PFC module fault	1. Ensure that the power supply is stable 2. Check the capacitor after it is powered off 3. Replace the faulty frequency conversion module
32	DC bus high voltage	1. The power supply voltage too high. 2. The capacitor fault 3. The PFC module fault	1. Ensure that the power supply voltage is normal 2. Replace the capacitor 3. Replace the faulty frequency conversion module
64	Radiator over	1. The fan on the host is faulty	1. Check and replace the fan

	temperature	2. The air duct is blocked	2. Ensure proper ventilation
128	Radiator temperature error	1. The heat sink sensor is short-circuited or open 2. Heat sink fouling 3. The ambient temperature too high	1. Replace the frequency conversion module 2. Remove dust and scale from the heat sink 3. Lower the ambient temperature
257	communication failure	1. The connector of the communication cable between the main board and the driver board is in poor contact or falls off 2. Internal components of the heat pump damaged 3. The output voltage of the power supply board in the module abnormal or no output	1. Reconnect and ensure stability 2. Replace the internal components 3. Replace the power module
264	AC Input low voltage	1. The input voltage too low 2. The current transformer damaged during transportation	1. Ensure that the input voltage is normal 2. Ensure that the current transformer works properly
288	IPM too high temperature	1. The fan is faulty or the air duct blocked 2. The ring temperature rises too fast, resulting in over-temperature drop too late to react 3. The power supply voltage and current too high or too low	1. Replace the fan 2. Ensure that the air duct unblocked 3. Reduce the ring temperature 4. Ensure that the power supply voltage and current are normal
320	Compressor peak current too high	1. Compressor load is too large; 2. The driver board is faulty 3. The compressor is damaged	1 Ensure that the ring temperature, water temperature, water flow, etc. are within the operating range of the unit; 2. Replace the compressor driver plate. 3. Replace the compressor

6. Wifi Connection and Operation

6.1. APP Download

6.1.1. Go to “Google Play Store” or “Apple App Store”

6.1.2. Search for “Smart Life” app, and download. The app icons in the app stores should look like below

6.1.3. Sign Up & Register to create account.

6.2. Pairing the Clim8zone II to Mobile phone

6.2.1. On the Clim8zone II:

- Make sure water pump is circulating water through the Clim8zone II.
- Power up the Clim8zone II.
- The Clim8zone II will automatically go to paring mode for 10 minutes. Please pair the Clim8zone with you mobile device within this 10 minutes time frame. While in paring mode, the word “nEt” will be flashing on the front panel and stay flashing until paring is done.

6.2.2. On the Mobile device:

- Turn on Wi-Fi and Bluetooth.
- Connect your mobile phone to your home 2.4GHz Wi-Fi connection. **NOTE**: The Clim8zone II works only with 2.4GHz connection and will NOT work with 5GHz connection. When your mobile device is connected to a 5GHz network, the app will detect and prompt a message asking you to change to 2.4GHz Wi-Fi. Please do so before proceeding forward.

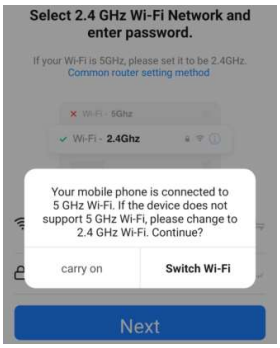

NOTE: It is common that your router may have both 2.4G & 5GHz connections, choose 2.4GHz instead.

6.2.3. Paring

- Open the “Smart Life” app
- Login to enter the main interface.
- Click "+" in the upper right corner and select “Add Device”.

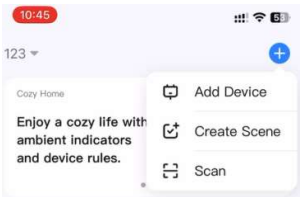

- The interface will show “Discovering devices…”. Click “Add” to enter “Add Device” interface.

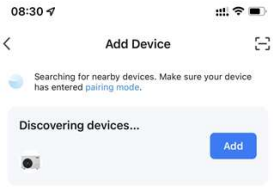

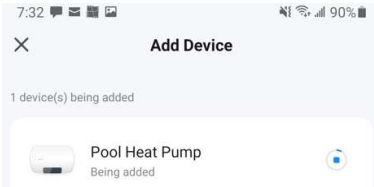

(Note: I can also choose to add manually, by clicking on “Large Home Appliances”, then choose “Water Heater (Wi-Fi)”

- Select the same 2.4GHz Wifi network with your mobile device and enter password.

- Click “Next”. The interface will show “1 device is being added”. Be patient as it will take some time for the device to be added.

- When the device is added successfully, the interface will show “1 device(s) added successfully”. Click “Done” to enter the app Homepage.

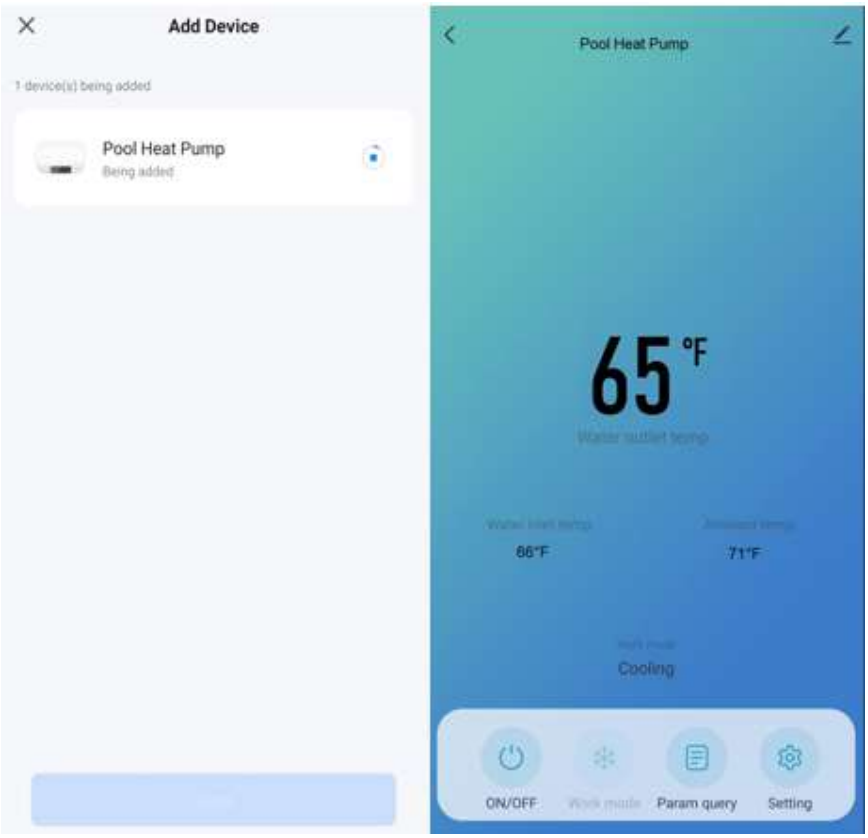

(NOTE: it may take several times to pair depending on the strength of your Wi-Fi signal. Retry as needed)

6.3. App operation

6.3.1. Interface Introduction

- After the device is successfully added, click “Pool Heat Pump” (your app may show different name) in “All Devices” in the main interface of “Smart Life” app to enter the “Pool Heat Pump” operation page.

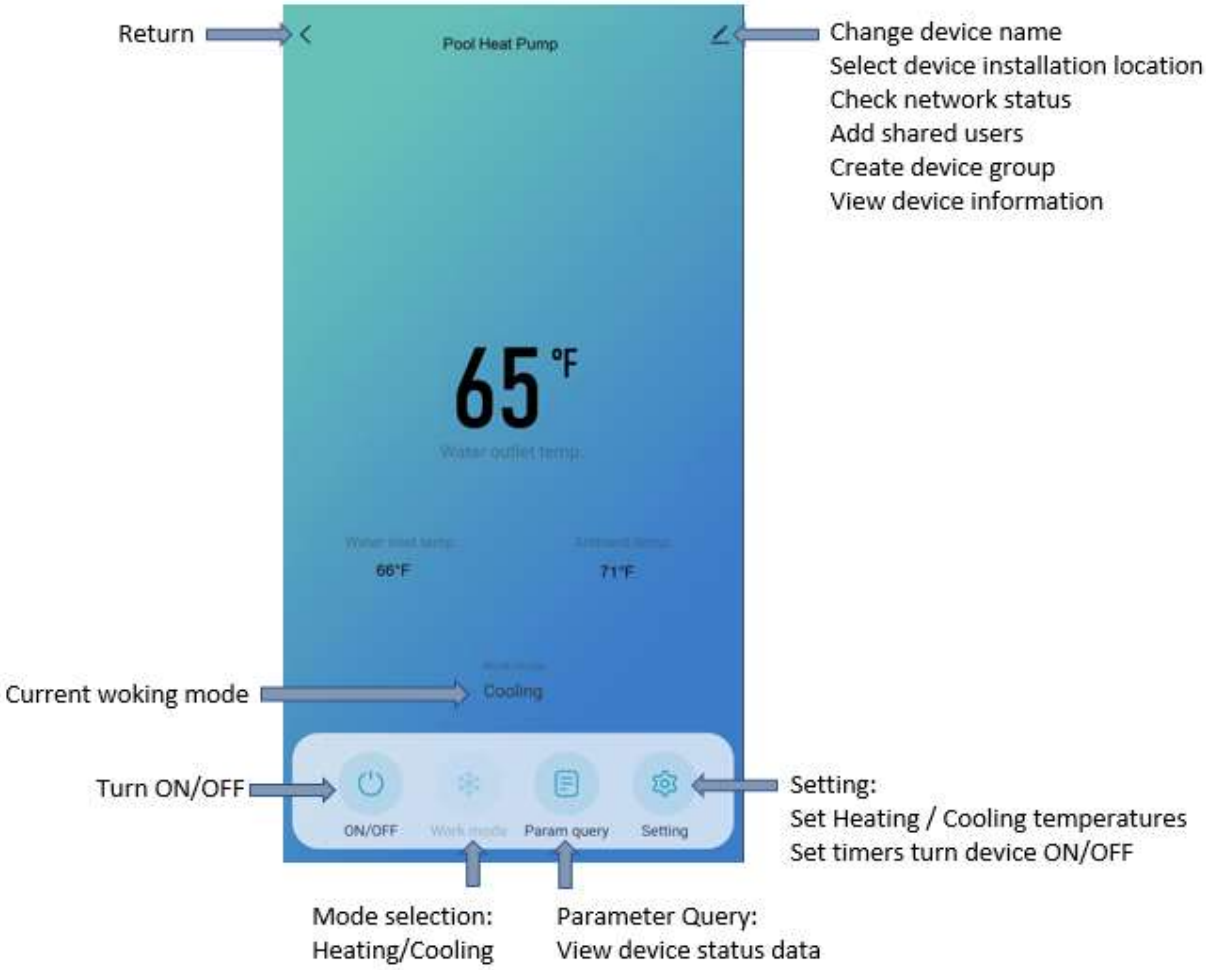

6.3.2. Icons

-
  - Change device name
  - Select device installation location
  - Check network status
  - Add shared users
  - Create device group
  - View device information
- Return to previous page
-

Turn the Clim8zone II on ON/OFF,
-

Set Heating or Cooling mode

-

View device status data
- 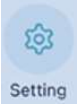

    - Set Heating / Cooling temperatures
    - Set timers turn device ON/OFF

6.3.3. Sharing device:

The “Share Device” feature in the Smart Life app allows you to share access to your heat pump with other Smart Life app users. This can be useful if you want to give family members access to control the heat pump, or if you want to give access to a technician who needs to troubleshoot the heat pump remotely.

To use “Share Device” feature, follow the following steps:

- Click on “Share Device”
- Enter the email address or Smart Life username of the person you want to share.
- Choose the level of access you want to grant to the person. You can choose between “Device Control” (control heat pump operation only) and Device Management” (control heat pump, add/remove users and change setting). Click “Confirm”.
- The person you have invited will receive an email or notification in the Smart Life app with instructions on how to accept the invitation and gain access to the heat pump. They will need to have their own Smart Life account to accept the invitation.

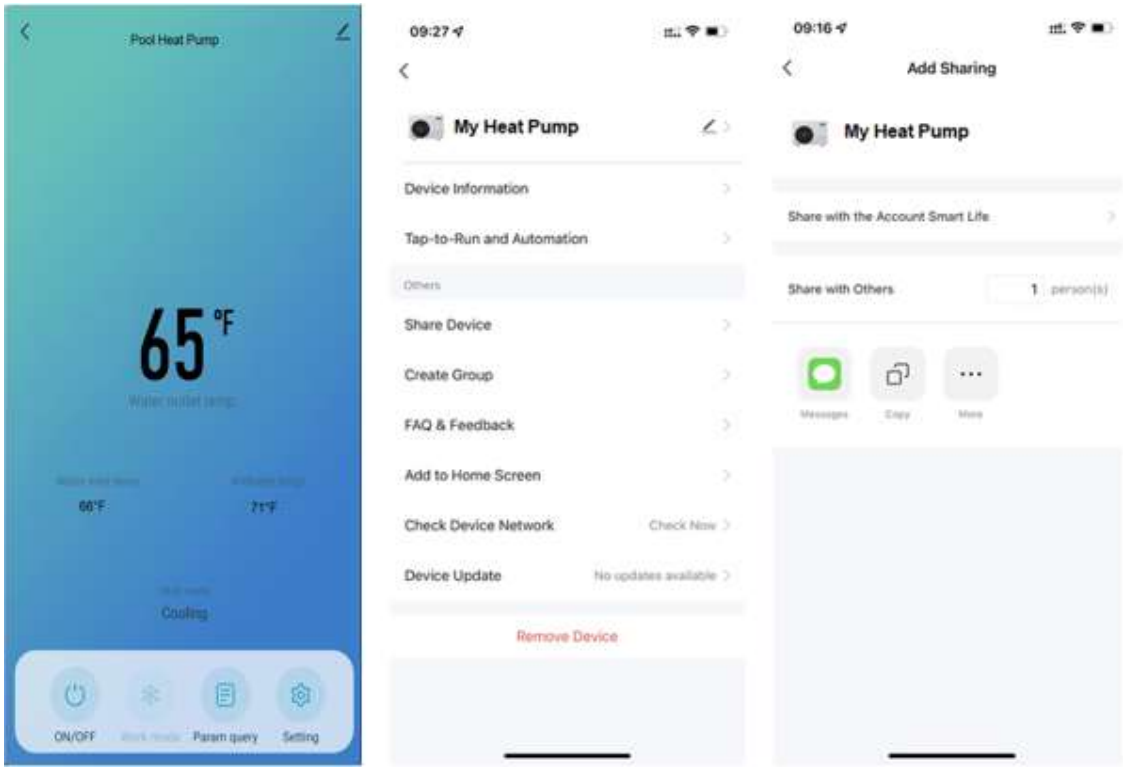

6.3.4. Manual pairing mode

If you cannot connect properly or change the phone connection in automatic pairing mode, you need to enter the pairing mode manually:

Press "⏻" and "▼" for about 5 seconds at the same time, after hear a buzzer to enter the pairing mode, and then repeat the above connection operations.

7. Maintenance

Maintaining your spa heat pump is crucial to ensure its optimal performance and longevity. Here are some essential maintenance instructions for your spa heat pump:

1. Regular cleaning: Keep your spa heat pump clean by removing any debris, leaves, or dirt that may have accumulated around it. Use a soft-bristle brush to clean the outer surfaces of the heat pump.
2. Check the water supply system regularly to avoid the air trapped in the system and occurrence of low water flow, because it would reduce the performance and reliability of heat pump.
3. Remove all water from the heat pump if it will not be used for a long period of time (especially during the winter).
4. After the unit has been properly winterized, it is recommended to cover the heat pump with a special winter cover.
5. After a long winter shutdown, before starting to run the heat pump again, make sure the spa is filled with fresh and clean water and all valves to the heat pump are open.
6. When the unit is running, it is normal that there is some water discharged under the unit all the time.
7. Schedule professional maintenance: Schedule regular maintenance with a licensed professional to ensure that your spa heat pump is in good working condition. A professional technician can identify and fix any issues before they turn into bigger problems.

Following these maintenance instructions can help keep your spa heat pump running smoothly and efficiently, ensuring that you enjoy a relaxing and comfortable spa experience.