TEST REPORT

Report No.:	BCTC2303988551-2E
Applicant:	Shenzhen KunHong Electronics Co., Ltd
Product Name:	Car Charger with Bluetooth and FM Transmitter
Model/Type Ref.:	APW-FM50-001B
Tested Date:	2023-03-16 to 2023-04-04
Issued Date:	2023-04-04

Shenzhen BCTC Testing Co., Ltd.

FCC ID: 2ATNH-PWFM5001

Product Name:	Car Charger with Bluetooth and FM Transmitter
Trademark:	N/A
Model/Type Ref.:	APW-FM50-001B
Prepared For:	Shenzhen KunHong Electronics Co., Ltd
Address:	Suites 2108-2110, Tower C, Times Square Excellence, Baoan Center, Shenzhen
Manufacturer:	Shenzhen KunHong Electronics Co., Ltd
Address:	Suites 2108-2110, Tower C, Times Square Excellence, Baoan Center, Shenzhen
Prepared By:	Shenzhen BCTC Testing Co., Ltd.
Address:	1-2/F., Building B, Pengzhou Industrial Park, No.158, Fuyuan 1st Road, Zhancheng, Fuhai Subdistrict, Bao'an District, Shenzhen, Guangdong, China
Sample Received Date:	2023-03-16
Sample tested Date:	2023-03-16 to 2023-04-04
Issue Date:	2023-04-04
Report No.:	BCTC2303988551-2E
Test Standards:	FCC Part15.239 ANSI C63.10:2013
Test Results:	PASS

Tested by:

Brave Zeng/ Project Handler

Approved by:

Zero Zhou/Reviewer

The test report is effective only with both signature and specialized stamp. This result(s) shown in this report refer only to the sample(s) tested. Without written approval of Shenzhen BCTC Testing Co., Ltd, this report can't be reproduced except in full. The tested sample(s) and the sample information are provided by the client.

Table Of Content

Test Report Declaration Page
1. Version 4
2. Test Summary 5
3. Measurement Uncertainty 6
4. Product Information And Test Setup 7
4.1 Product Information 7
4.2 Test Setup Configuration 7
4.4 Channel List 8
4.5 Test Mode 8
4.6 Table Of Parameters Of Text Software Setting 8
5. Test Facility And Test Instrument Used 9
5.1 Test Facility 9
5.2 Test Instrument Used 9
6. Conducted Emissions 11
6.1 Block Diagram Of Test Setup 11
6.2 Limit 11
6.3 Test Procedure 11
6.4 EUT Operating Conditions 12
6.5 Test Result 12
7. Radiated Emissions 13
7.1 Block Diagram Of Test Setup 13
7.2 Limit 14
7.3 Test Procedure 16
7.4 EUT Operating Conditions 17
7.5 Test Result 17
8. Bandwidth Test 25
8.1 Applied Procedures / Limit 25
8.2 Test Procedure 25
8.3 Deviation From Standard 25
8.4 Test Setup 25
8.5 Eut Operation Conditions 25
8.6 Test Result 26
9. Band Edge Measurement 29
9.1 Block Diagram Of Test Setup 29
9.2 Applicable Standard 29
9.3 Test Procedure 29
9.4 EUT Operation Conditions 29
9.5 Test Results 30
10. Antenna Requirement 31
10.1 Standard Requirement 31
10.2 EUT Antenna 31
11. EUT Photographs 32
12. EUT Test Setup Photographs 33

(Note: N/A Means Not Applicable)

1. Version

Report No.	Issue Date	Description	Approved
BCTC2303988551-2E	2023-04-04	Original	Valid

2. Test Summary

The Product has been tested according to the following specifications:

FCC Part15 (15.239) , Subpart C			
Standard Section	Test Item	Judgment	Remark
15.207	Conducted Emission	N/A	
15.209&15.239	Fundamental &Radiated Spurious Emission Measurement	PASS	
15.239a	Occupy Bandwidth	PASS	
15.203	Antenna Requirement	PASS	
15.239a	Band Edge Measurement	PASS	

Note: N/A means not applicable.

3. Measurement Uncertainty

Where relevant, the following measurement uncertainty levels have been estimated for tests performed on the Product as specified in CISPR 16-4-2. This uncertainty represents an expanded uncertainty expressed at approximately the 95% confidence level using a coverage factor of k=2.

No.	Item	Uncertainty
1	3m camber Radiated spurious emission(30MHz-1GHz)	U=4.3dB
2	3m chamber Radiated spurious emission(1GHz-18GHz)	U=4.5dB
3	3m chamber Radiated spurious emission(18GHz-40GHz)	U=3.34dB
4	Conducted Adjacent channel power	U=1.38dB
5	Conducted output power uncertainty Above 1G	U=1.576dB
6	Conducted output power uncertainty below 1G	U=1.28dB
7	humidity uncertainty	U=5.3%
8	Temperature uncertainty	U=0.59℃

4. Product Information And Test Setup

4.1 Product Information

Model/Type Ref.:	APW-FM50-001B
Model differences:	N/A
Hardware Version:	N/A
Software Version:	N/A
Operation Frequency:	88.1-107.9MHz
Type of Modulation:	FM
Number Of Channel	199CH
Antenna installation:	Internal antenna
Antenna Gain:	0 dBi
Ratings:	DC 12V/DC 24V

4.2 Test Setup Configuration

See test photographs attached in *EUT TEST SETUP PHOTOGRAPHS* for the actual connections between Product and support equipment.

Radiated Spurious Emission

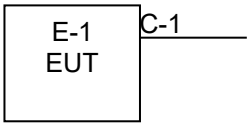

4.3 Support Equipment

No.	Device Type	Brand	Model	Series No.	Note
E-1	Car Charger with Bluetooth and FM Transmitter	N/A	APW-FM50-001 B	N/A	EUT

Item	Shielded Type	Ferrite Core	Length	Note
C-1	N/A	N/A	1M	DC cable unshielded

Notes:

1. All the equipment/cables were placed in the worst-case configuration to maximize the emission during the test.
2. Grounding was established in accordance with the manufacturer's requirements and conditions for the intended use.

4.4 Channel List

Channel List					
Channel	Frequency (MHz)	Channel	Frequency (MHz)	Channel	Frequency (MHz)
1	88.1	2	88.2	3	88.3
~					
100	98	101	98.1	102	98.2
~					
197	107.7	198	107.8	199	107.9

4.5 Test Mode

To investigate the maximum EMI emission characteristics generates from EUT, the test system was pre-scanning tested base on the consideration of following EUT operation mode or test configuration mode which possible have effect on EMI emission level. Each of these EUT operation mode(s) or test configuration mode(s) mentioned above was evaluated respectively.

For All Mode	Description	Modulation Type
Mode 1	CH1	FM
Mode 2	CH100	FM
Mode 3	CH199	FM
Mode 4	Transmission (Conducted emission & Radiated emission)	

Note:
(1) The measurements are performed at the highest, middle, lowest available channels.

4.6 Table Of Parameters Of Text Software Setting

During testing channel & power controlling software provided by the customer was used to control the operating channel as well as the output power level. The RF output power selection is for the setting of RF output power expected by the customer and is going to be fixed on the firmware of the final end product power parameters

Test software Version	N/A		
Frequency	88.1 MHz	98 MHz	107.9 MHz
Parameters	DEF	DEF	DEF

5. Test Facility And Test Instrument Used

5.1 Test Facility

All measurement facilities used to collect the measurement data are located at Shenzhen BCTC Testing Co., Ltd. Address: 1-2/F., Building B, Pengzhou Industrial Park, No.158, Fuyuan 1st Road, Tangwei, Fuhai Subdistrict, Bao'an District, Shenzhen, Guangdong, China. The site and apparatus are constructed in conformance with the requirements of ANSI C63.4 and CISPR 16-1-1 other equivalent standards.
FCC Test Firm Registration Number: 712850
A2LA certificate registration number is: CN1212
ISED Registered No.: 23583
ISED CAB identifier: CN0017

5.2 Test Instrument Used

RF Conducted Test					
Equipment	**Manufacturer**	**Model#**	**Serial#**	**Last Cal.**	**Next Cal.**
Power Metter	Keysight	E4419	\	May 24, 2022	May 23, 2023
Power Sensor (AV)	Keysight	E9300A	\	May 24, 2022	May 23, 2023
Signal Analyzer20kHz-26.5GHz	Keysight	N9020A	MY49100060	May 24, 2022	May 23, 2023
Spectrum Analyzer9kHz-40GHz	R&S	FSP40	100363	May 24, 2022	May 23, 2023

Radiated Emissions Test (966 Chamber01)					
Equipment	**Manufacturer**	**Model#**	**Serial#**	**Last Cal.**	**Next Cal.**
966 chamber	ChengYu	966 Room	966	Jun. 06. 2020	Jun. 05, 2023
Receiver	R&S	ESR3	102075	May 24, 2022	May 23, 2023
Receiver	R&S	ESRP	101154	May 24, 2022	May 23, 2023
Amplifier	Schwarzbeck	BBV9744	9744-0037	May 24, 2022	May 23, 2023
TRILOG Broadband Antenna	Schwarzbeck	VULB9163	942	May 26, 2022	May 25, 2023
Loop Antenna(9KHz -30MHz)	Schwarzbeck	FMZB1519B	00014	May 26, 2022	May 25, 2023
Amplifier	SKET	LAPA_01G18 G-45dB	\	May 24, 2022	May 23, 2023
Horn Antenna	Schwarzbeck	BBHA9120D	1541	Jun. 06, 2022	Jun. 05, 2023
Amplifier(18G Hz-40GHz)	MITEQ	TTA1840-35-HG	2034381	May 26, 2022	May 25, 2023
Horn Antenna(18G Hz-40GHz)	Schwarzbeck	BBHA9170	00822	Jun. 06, 2022	Jun. 05, 2023
Spectrum Analyzer9kHz-40GHz	R&S	FSP40	100363	May 24, 2022	May 23, 2023
Software	Frad	EZ-EMC	FA-03A2 RE	\	\

6. Conducted Emissions

6.1 Block Diagram Of Test Setup

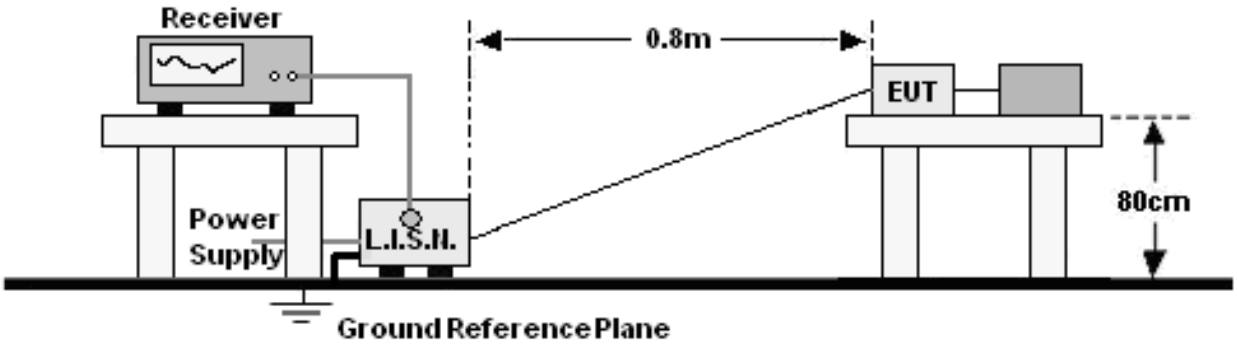

6.2 Limit

FREQUENCY (MHz)	Limit (dBuV)	
	Quas-peak	Average
0.15 -0.5	66 - 56 *	56 - 46 *
0.50 -5.0	56.00	46.00
5.0 -30.0	60.00	50.00
Notes: 1. *Decreasing linearly with logarithm of frequency. 2. The lower limit shall apply at the transition frequencies.		

6.3 Test Procedure

Receiver Parameters	Setting
Attenuation	10 dB
Start Frequency	0.15 MHz
Stop Frequency	30 MHz
IF Bandwidth	9 kHz

a. The Product was placed on a nonconductive table 0.8 m above the horizontal ground reference plane, and 0.4 m from the vertical ground reference plane, and connected to the main through Line Impedance Stability Network (L.I.S.N).
b. The RBW of the receiver was set at 9 kHz in 150 kHz ~ 30MHz with Peak and AVG detector in Max Hold mode. Run the receiver's pre-scan to record the maximum disturbance generated from Product in all power lines in the full band.
c. For each frequency whose maximum record was higher or close to limit, measure its QP and AVG values and record.

6.4 EUT Operating Conditions

The EUT was configured for testing in a typical fashion (as a customer would normally use it). The EUT has been programmed to continuously transmit during test. This operating condition was tested and used to collect the included data.

6.5 Test Result

The EUT is powered by the DC only, the test item is not applicable.

7. Radiated Emissions

7.1 Block Diagram Of Test Setup

（A）Radiated Emission Test-Up Frequency Below 30MHz

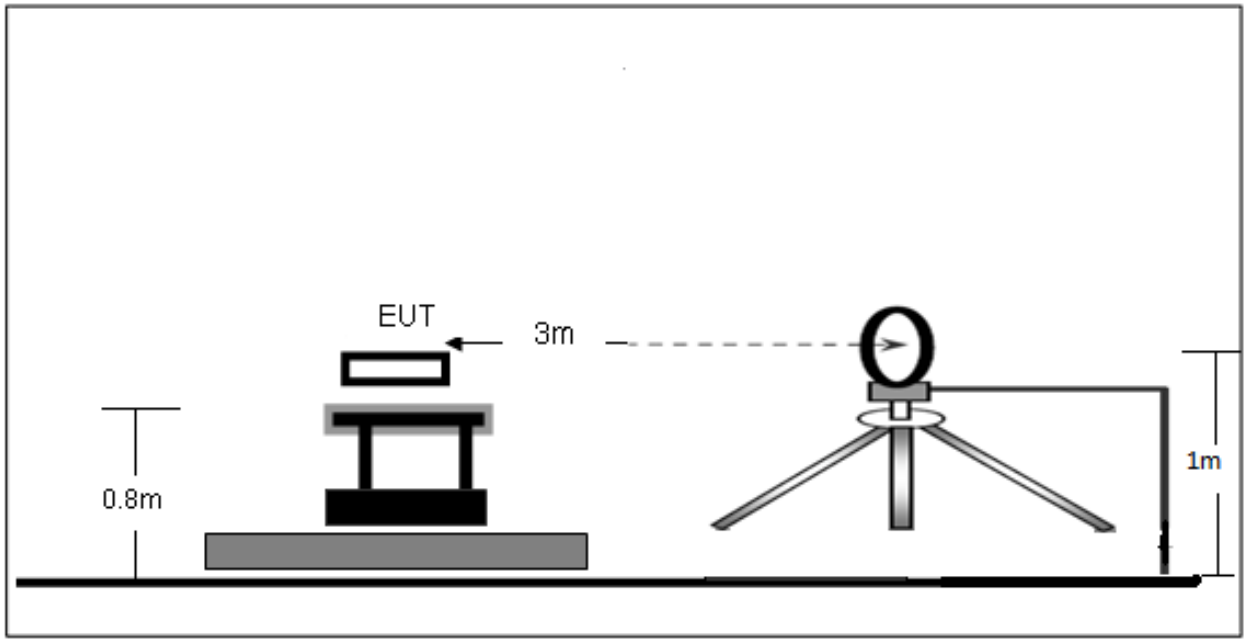

（B）Radiated Emission Test-Up Frequency 30MHz~1GHz

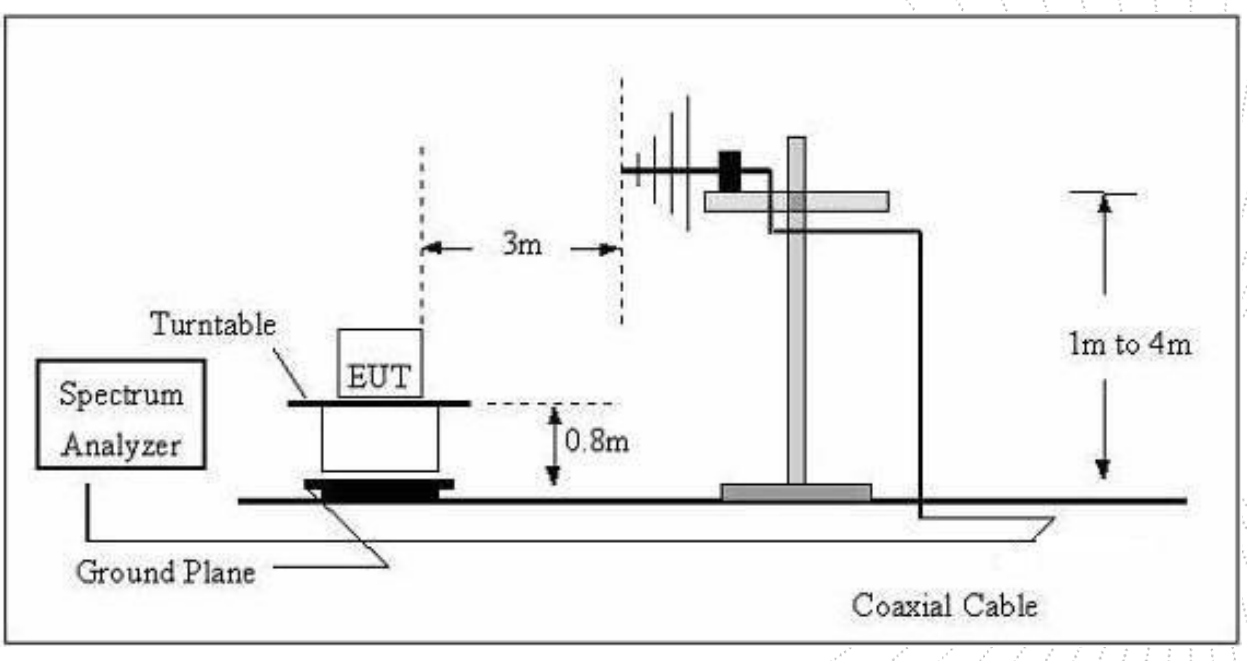

（C）Radiated Emission Test-Up Frequency Above 1GHz

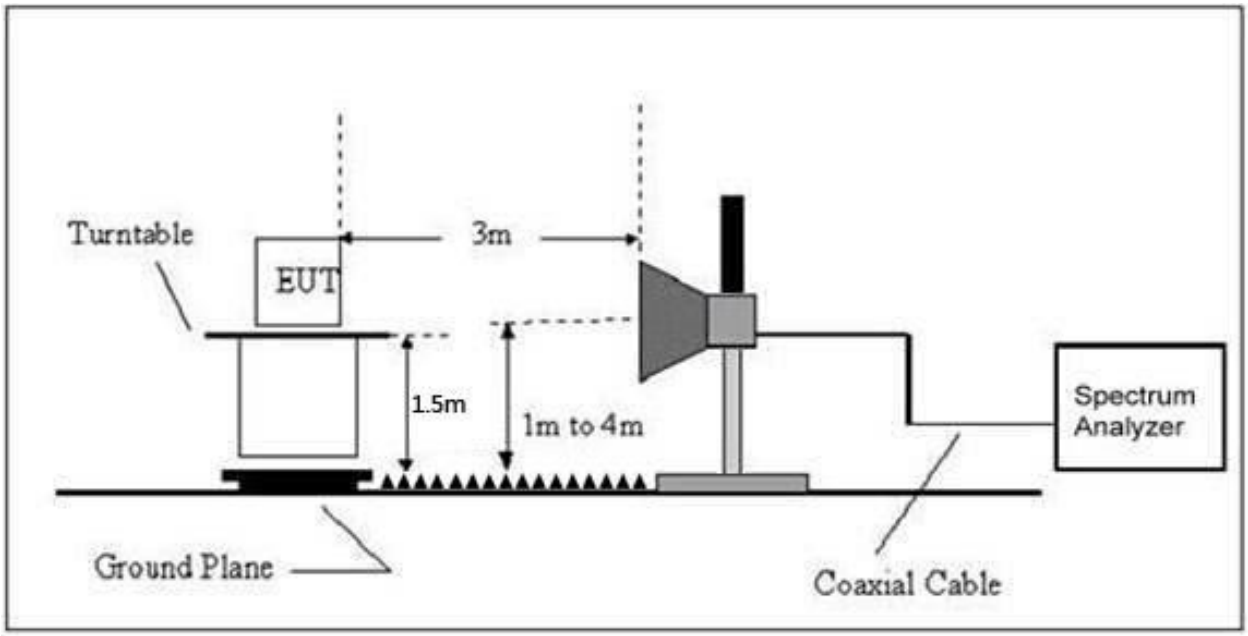

7.2 Limit

FREQUENCY (MHz)	Limit (dBuV/m) (at 3M)	
	PEAK	AVERAGE
88-108MHz	68	48

Note: Fcc part15.239 (b) The field strength of any emissions within the permitted 200 kHz band shall not exceed 250 microvolts/meter at 3 meters. The emission limit in this paragraph is based on measurement instrumentation employing an average detector. The provisions in Section 15.35 for limiting peak emissions apply.

20dBc in any 100 kHz bandwidth outside the operating frequency band. In case the emission fall within the restricted band specified on 15.205(a), then the 15.209(a) limit in the table below has to be followed.

Frequency	Field Strength	Distance	Field Strength Limit at 3m Distance	
(MHz)	uV/m	(m)	uV/m	dBuV/m
0.009 ~ 0.490	2400/F(kHz)	300	10000 * 2400/F(kHz)	$20\log^{(2400/F(kHz))} + 80$
0.490 ~ 1.705	24000/F(kHz)	30	100 * 24000/F(kHz)	$20\log^{(24000/F(kHz))} + 40$
1.705 ~ 30	30	30	100 * 30	$20\log^{(30)} + 40$
30 ~ 88	100	3	100	$20\log^{(100)}$
88 ~ 216	150	3	150	$20\log^{(150)}$
216 ~ 960	200	3	200	$20\log^{(200)}$
Above 960	500	3	500	$20\log^{(500)}$

LIMITS OF RADIATED EMISSION MEASUREMENT (Above 1000MHz)

FREQUENCY (MHz)	Limit (dBuV/m) (at 3M)	
	PEAK	AVERAGE
Above 1000	74	54

Notes:
(1)The limit for radiated test was performed according to FCC PART 15C.
(2)The tighter limit applies at the band edges.
(3) Emission level (dBuV/m)=20log Emission level (uV/m).

FREQUENCY RANGE OF RADIATED MEASUREMENT (For unintentional radiators)

Highest frequency generated or Upper frequency of measurement used in the device or on which the device operates or tunes (MHz)	Range (MHz)
Below 1.705	30
1.705 – 108	1000
108 – 500	2000
500 – 1000	5000
Above 1000	5th harmonic of the highest frequency or 40 GHz, whichever is lower

7.3 Test Procedure

Receiver Parameter	Setting
Attenuation	Auto
9kHz~150kHz	RBW 200Hz for QP
150kHz~30MHz	RBW 9kHz for QP
30MHz~1000MHz	RBW 120kHz for QP

Spectrum Parameter	Setting
1-25GHz	RBW 1 MHz /VBW 1 MHz for Peak, RBW 1 MHz / VBW 10Hz for Average

Below 1GHz test procedure as below:
a. The EUT was placed on the top of a rotating table 0.8 meters above the ground at a 3 meter semi-anechoic chamber. The table was rotated 360 degrees to determine the position of the highest radiation.
b. The EUT was set 3 meters away from the interference-receiving antenna, which was mounted on the top of a variable-height antenna tower.

c. The antenna height is varied from one meter to four meters above the ground to determine the maximum value of the field strength. Both horizontal and vertical polarizations of the antenna are set to make the measurement.
d. For each suspected emission, the EUT was arranged to its worst case and then the antenna was tuned to heights from 1 meter to 4 meters (for the test frequency of below 30MHz, the antenna was tuned to heights 1 meter) and the rotatable table was turned from 0 degrees to 360 degrees to find the maximum reading.
e. The test-receiver system was set to Peak Detect Function and Specified Bandwidth with Maximum Hold Mode.
f. If the emission level of the EUT in peak mode was 10dB lower than the limit specified, then testing could be stopped and the peak values of the EUT would be reported. Otherwise the emissions that did not have 10dB margin would be re-tested one by one using peak, quasi-peak or average method as specified and then reported in a data sheet.
Above 1GHz test procedure as below:
g. Different between above is the test site, change from Semi- Anechoic Chamber to fully Anechoic Chamber and change form table 0.8 metre to 1.5 metre(Above 18GHz the distance is 1 meter and table is 1.5 metre).
h. Test the EUT in the lowest channel ,the middle channel ,the Highest channel.
Note:
Both horizontal and vertical antenna polarities were tested and performed pretest to three orthogonal axis. The worst case emissions were reported.

Above 1GHz test procedure as below:
a. The EUT was placed on the top of a rotating table 1.5 meters above the ground at a 3 meter chamber. The table was rotated 360 degrees to determine the position of the highest radiation.
b. The EUT was set 3 meters away from the interference-receiving antenna, which was mounted on the top of a variable-height antenna tower.
c. The antenna height is varied from one meter to four meters above the ground to determine the maximum value of the field strength. Both horizontal and vertical polarizations of the antenna are set to make the measurement.

d. For each suspected emission, the EUT was arranged to its worst case and then the antenna was tuned to heights from 1 meter to 4 meters and the rota table was turned from 0 degrees to 360 degrees to find the maximum reading.
e. The test-receiver system was set to Peak Detect Function and Specified Bandwidth with Maximum Hold Mode.
f. If the emission level of the EUT in peak mode was 10dB lower than the limit specified, then testing could be stopped and the peak values of the EUT would be reported. Otherwise the emissions that did not have 10dB margin would be re-tested one by one using peak, quasi-peak or average method as specified and then reported in a data sheet.
g. Test the EUT in the lowest channel, the Highest channel.
Note:
Both horizontal and vertical antenna polarities were tested and performed pretest to three orthogonal axis. The worst case emissions were reported.

7.4 EUT Operating Conditions

The EUT was configured for testing in a typical fashion (as a customer would normally use it). The EUT has been programmed to continuously transmit during test. This operating condition was tested and used to collect the included data.

7.5 Test Result

Below 30MHz

Temperature:	26℃	Relative Humidity:	24%
Pressure:	101 kPa	Test Voltage :	DC 12V/24V
Test Mode :	Mode 1	Polarization :	--

Freq.	Reading	Limit	Margin	State
(MHz)	(dBuV/m)	(dBuV/m)	(dB)	P/F
--	--	--	--	PASS
--	--	--	--	PASS

Note:
The amplitude of spurious emissions which are attenuated by more than 20dB below the permissible value has no need to be reported.
Distance extrapolation factor =40 log (specific distance/test distance)(dB);
Limit line = specific limits(dBuv) + distance extrapolation factor.

Between 30MHz – 1GHz

Temperature:	26℃	Relative Humidity:	54%
Pressure:	101KPa	Phase :	Horizontal
Test Mode:	Mode 1(88.1MHz)	Test Voltage :	DC 12V

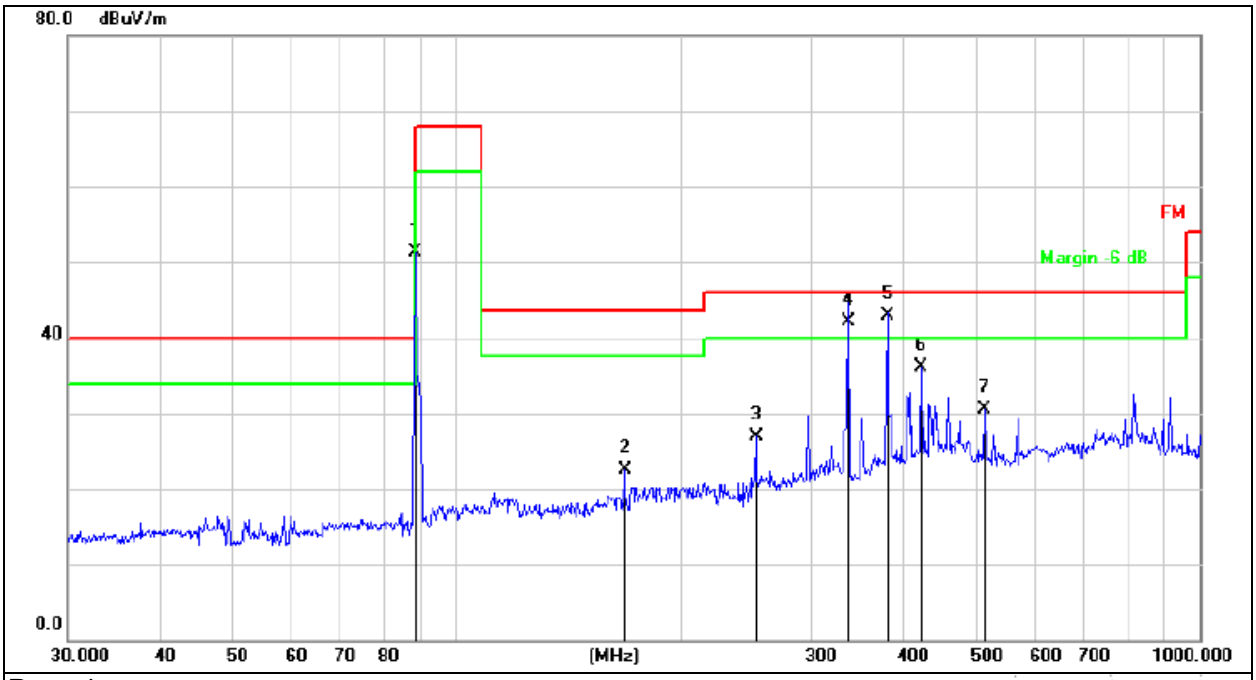

Remark:
1.Factor = Antenna Factor + Cable Loss – Pre-amplifier.
2. Measurement=Reading Level+ Correct Factor
3. Over= Measurement-Limit

No.	Mk.	Freq.	Reading Level	Correct Factor	Measure-ment	Limit	Over	
		MHz	dBuV	dB	dBuV/m	dB/m	dB	Detector
1		88.0327	71.01	-19.69	51.32	68.00	-16.68	peak
2		168.4138	42.27	-19.69	22.58	43.50	-20.92	QP
3		252.9482	42.62	-15.76	26.86	46.00	-19.14	QP
4	!	337.2155	55.32	-13.25	42.07	46.00	-3.93	QP
5	*	379.9141	55.30	-12.44	42.86	46.00	-3.14	QP
6		422.0577	47.94	-11.89	36.05	46.00	-9.95	QP
7		513.6331	40.48	-10.05	30.43	46.00	-15.57	QP

Temperature:	26℃	Relative Humidity:	54%
Pressure:	101KPa	Phase :	Vertical
Test Mode:	Mode 1(88.1MHz)	Test Voltage :	DC 12V

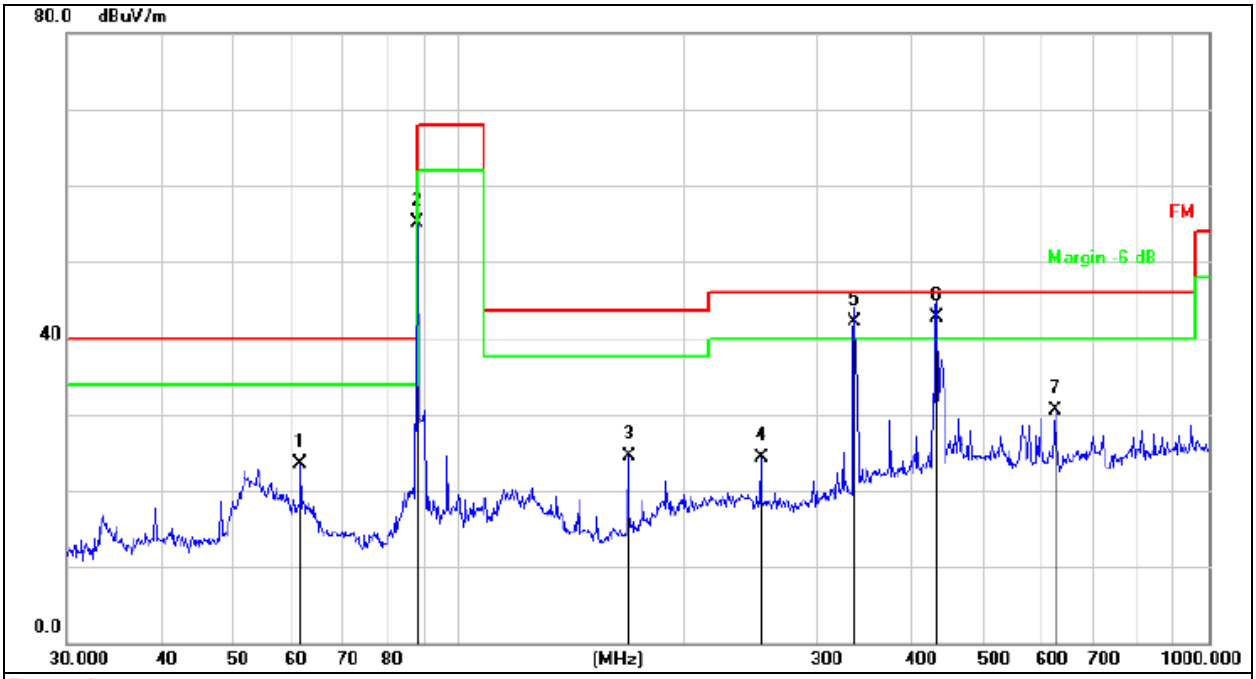

Remark:
1.Factor = Antenna Factor + Cable Loss – Pre-amplifier.
2. Measurement=Reading Level+ Correct Factor
3. Over= Measurement-Limit

No.	Mk.	Freq.	Reading Level	Correct Factor	Measure-ment	Limit	Over	
		MHz	dBuV	dB	dBuV/m	dB/m	dB	Detector
1		61.5617	41.06	-17.54	23.52	40.00	-16.48	QP
2		88.0327	74.70	-19.69	55.01	68.00	-12.99	peak
3		168.4138	44.19	-19.69	24.50	43.50	-19.00	QP
4		252.9482	40.03	-15.76	24.27	46.00	-21.73	QP
5	!	337.2155	55.39	-13.25	42.14	46.00	-3.86	QP
6	*	434.0649	54.50	-11.72	42.78	46.00	-3.22	QP
7		625.0778	38.51	-8.05	30.46	46.00	-15.54	QP

Between 30MHz – 1GHz

Temperature:	26℃	Relative Humidity:	54%
Pressure:	101KPa	Phase :	Horizontal
Test Mode:	Mode 2(98MHz)	Test Voltage :	DC 12V

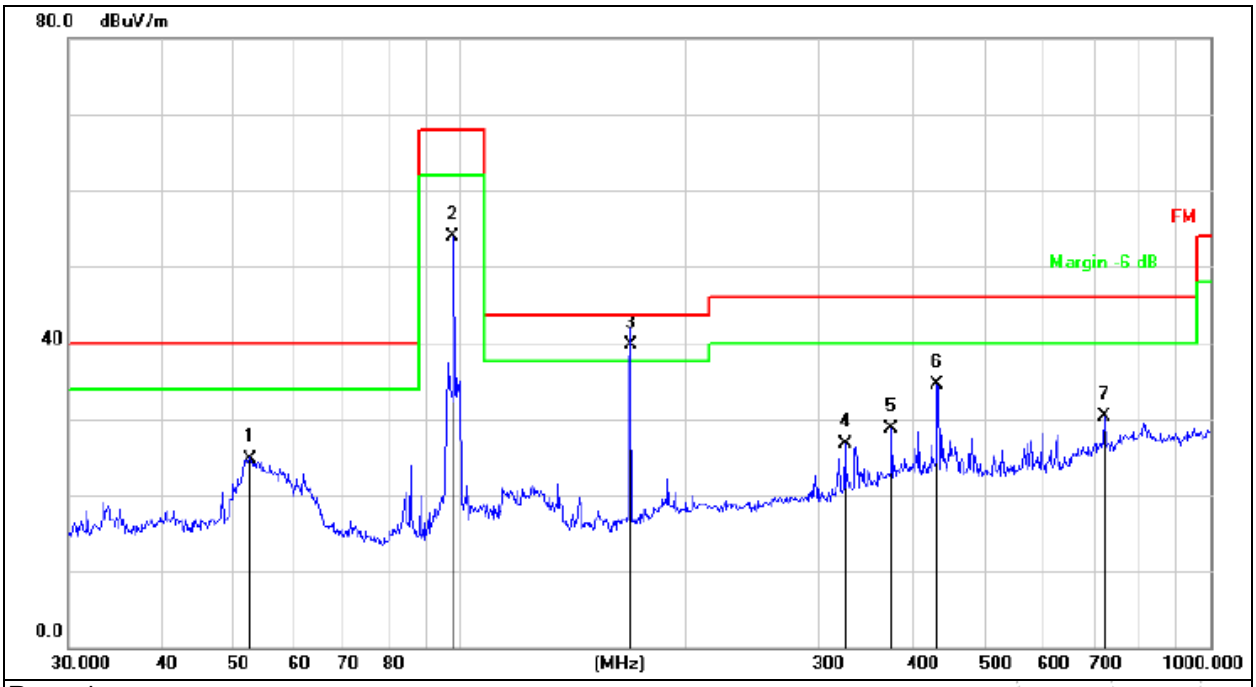

Remark:
1.Factor = Antenna Factor + Cable Loss – Pre-amplifier.
2. Measurement=Reading Level+ Correct Factor
3. Over= Measurement-Limit

No.	Mk.	Freq.	Reading Level	Correct Factor	Measure-ment	Limit	Over	
		MHz	dBuV	dB	dBuV/m	dB/m	dB	Detector
1		52.3912	40.75	-15.95	24.80	40.00	-15.20	QP
2		97.7980	71.99	-18.08	53.91	68.00	-14.09	peak
3	*	168.4138	59.38	-19.69	39.69	43.50	-3.81	QP
4		325.5957	40.35	-13.66	26.69	46.00	-19.31	QP
5		375.9384	41.25	-12.49	28.76	46.00	-17.24	QP
6		432.5457	46.25	-11.74	34.51	46.00	-11.49	QP
7		721.7259	37.15	-6.83	30.32	46.00	-15.68	QP

Temperature:	26℃	Relative Humidity:	54%
Pressure:	101KPa	Phase :	Vertical
Test Mode:	Mode 2(98MHz)	Test Voltage :	DC 12V

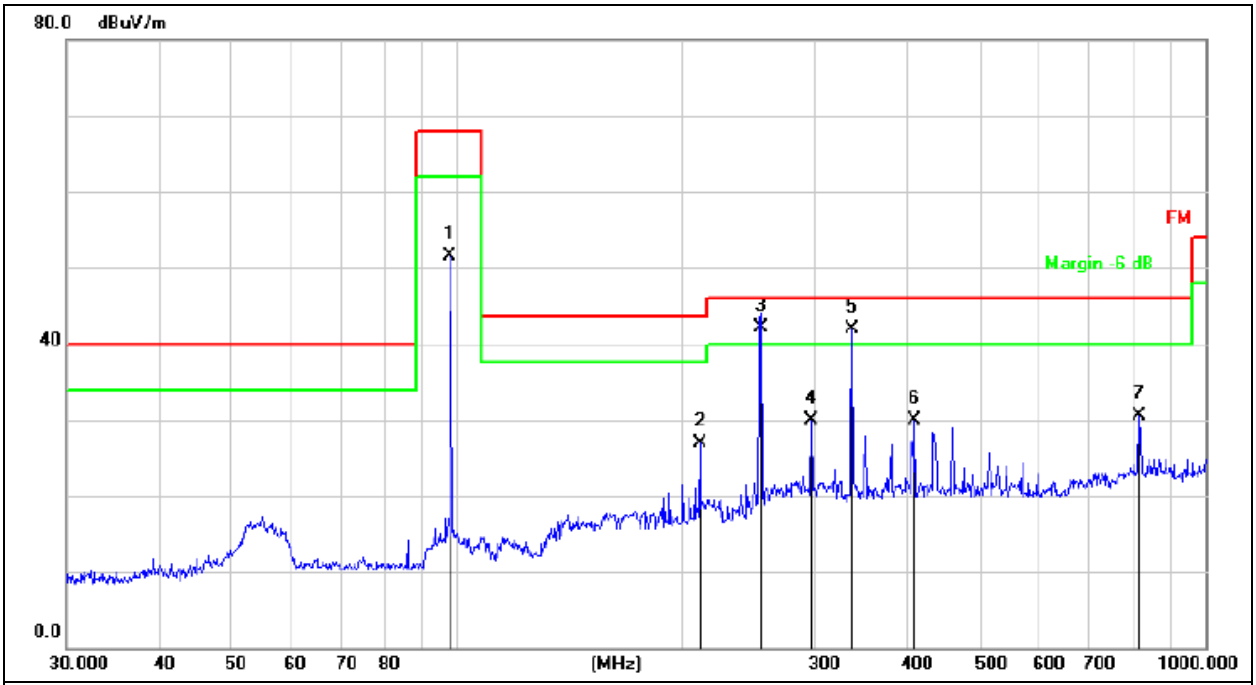

Remark:
1.Factor = Antenna Factor + Cable Loss – Pre-amplifier.
2. Measurement=Reading Level+ Correct Factor
3. Over= Measurement-Limit

No.	Mk.	Freq.	Reading Level	Correct Factor	Measure-ment	Limit	Over	
		MHz	dBuV	dB	dBuV/m	dB/m	dB	Detector
1		97.7980	69.55	-18.08	51.47	68.00	-16.53	peak
2		210.7860	44.01	-17.04	26.97	43.50	-16.53	QP
3	*	254.7281	57.88	-15.71	42.17	46.00	-3.83	QP
4		297.2241	44.58	-14.65	29.93	46.00	-16.07	QP
5	!	337.2155	55.21	-13.25	41.96	46.00	-4.04	QP
6		408.9460	42.01	-12.08	29.93	46.00	-16.07	QP
7		815.9678	35.99	-5.44	30.55	46.00	-15.45	QP

Between 30MHz – 1GHz

Temperature:	26℃	Relative Humidity:	54%
Pressure:	101KPa	Phase :	Horizontal
Test Mode:	Mode 3(107.9MHz)	Test Voltage :	DC 12V

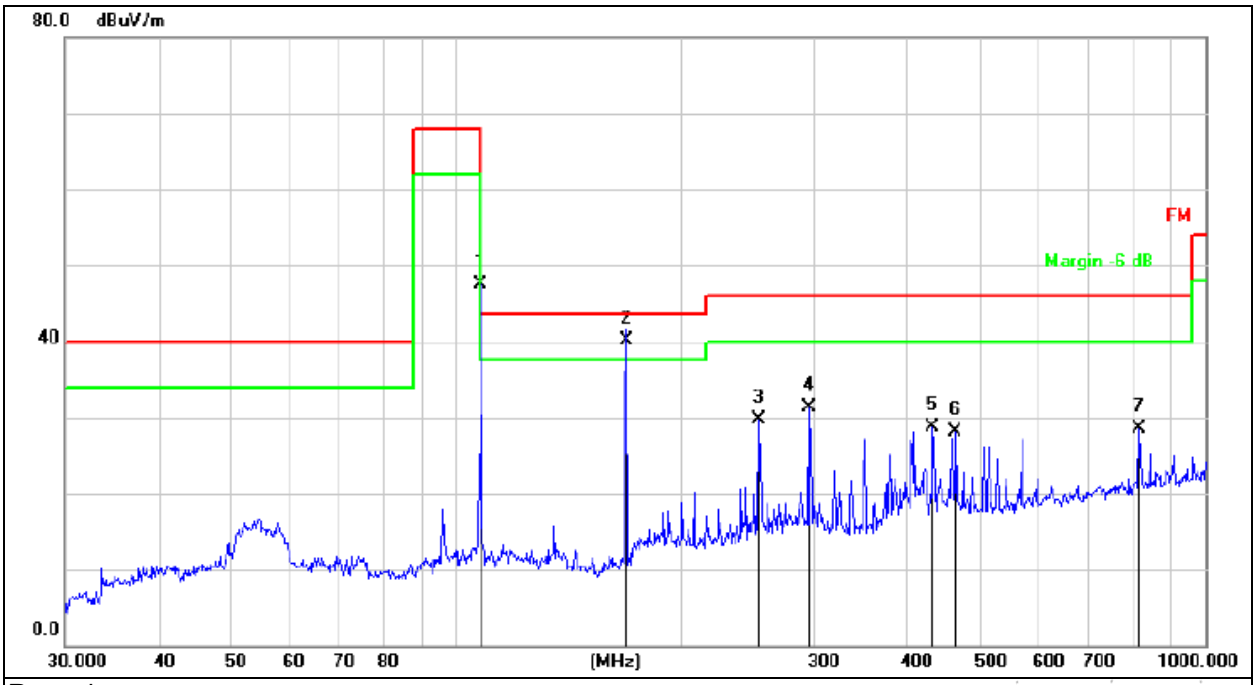

Remark:
1.Factor = Antenna Factor + Cable Loss – Pre-amplifier.
2. Measurement=Reading Level+ Correct Factor
3. Over= Measurement-Limit

No.	Mk.	Freq.	Reading Level	Correct Factor	Measure-ment	Limit	Over	
		MHz	dBuV	dB	dBuV/m	dB/m	dB	Detector
1		107.8876	65.72	-18.28	47.44	68.00	-20.56	peak
2	*	168.4138	59.88	-19.69	40.19	43.50	-3.31	QP
3		252.9482	45.39	-15.76	29.63	46.00	-16.37	QP
4		295.1469	45.92	-14.70	31.22	46.00	-14.78	QP
5		432.5457	40.45	-11.74	28.71	46.00	-17.29	QP
6		463.9696	39.20	-11.14	28.06	46.00	-17.94	QP
7		815.9678	34.00	-5.44	28.56	46.00	-17.44	QP

Temperature:	26℃	Relative Humidity:	54%
Pressure:	101KPa	Phase :	Vertical
Test Mode:	Mode 3(107.9MHz)	Test Voltage :	DC 12V

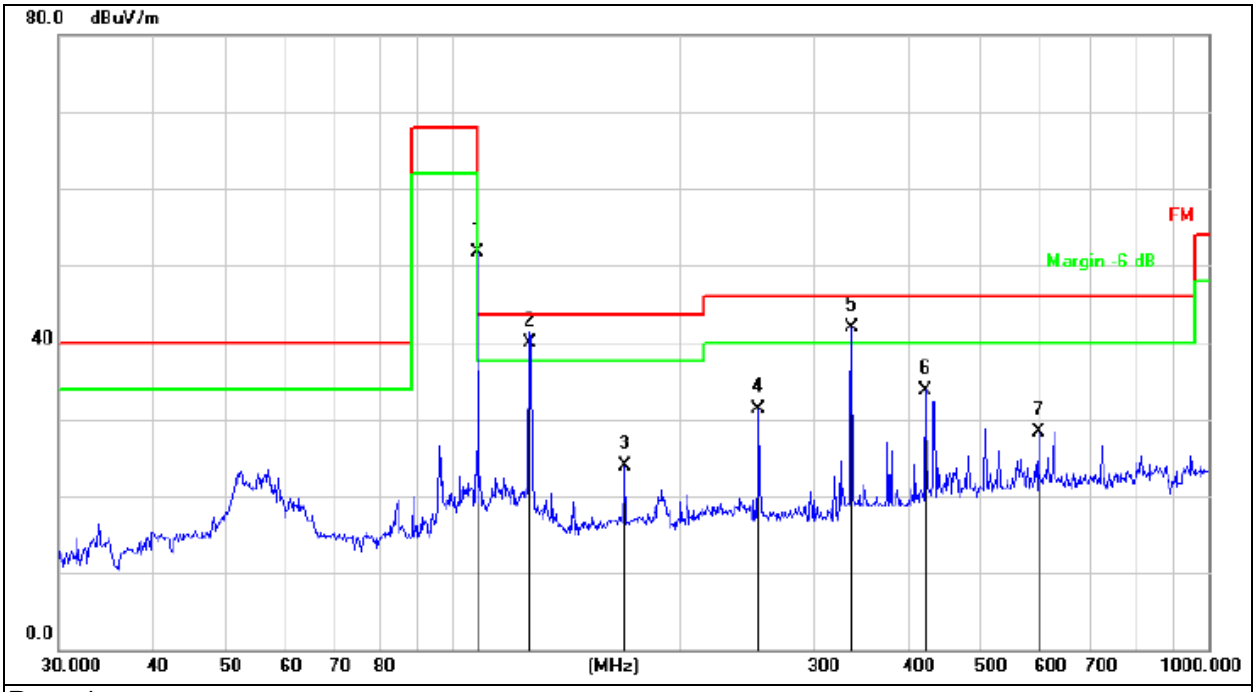

Remark:
1.Factor = Antenna Factor + Cable Loss – Pre-amplifier.
2. Measurement=Reading Level+ Correct Factor
3. Over= Measurement-Limit

No.	Mk.	Freq.	Reading Level	Correct Factor	Measure-ment	Limit	Over	
		MHz	dBuV	dB	dBuV/m	dB/m	dB	Detector
1		107.8876	70.02	-18.28	51.74	68.00	-16.26	peak
2	*	126.3285	59.33	-19.49	39.84	43.50	-3.66	QP
3		169.0054	43.60	-19.65	23.95	43.50	-19.55	QP
4		253.8367	47.00	-15.73	31.27	46.00	-14.73	QP
5	!	337.2155	55.24	-13.25	41.99	46.00	-4.01	QP
6		422.0577	45.69	-11.89	33.80	46.00	-12.20	QP
7		595.1326	36.89	-8.51	28.38	46.00	-17.62	QP

Field Strength Calculation

Frequency (MHz)	Emission Level (dBμV/m)	Limits (dBμV/m)	Margin (dB)	Horizontal /Vertical
88.1	51.32(PK)	68	-16.68	H
88.1	45.13(AV)	48	-2.87	H
88.1	55.01(PK)	68	-12.99	V
88.1	44.23(AV)	48	-3.77	V
98	53.91(PK)	68	-14.09	H
98	44.32(AV)	48	-3.68	H
98	51.47(PK)	68	-16.53	V
98	44.14(AV)	48	-3.86	V
107.9	47.44(PK)	68	-10.56	H
107.9	43.64(AV)	48	-4.36	H
107.9	51.74(PK)	68	-16.26	V
107.9	43.28(AV)	48	-4.72	V

8. Bandwidth Test

8.1 Applied Procedures / Limit

According to 15.209&15.239 requirement:
The bandwidth of the emission shall not exceed 200 kHz.

Spectrum Parameter	Setting
Attenuation	Auto
Span Frequency	> Measurement Bandwidth or Channel Separation
RB	30kHz
VB	≥RBW
Detector	Peak
Trace	Max Hold
Sweep Time	Auto

8.2 Test Procedure

a. The EUT was directly connected to the spectrum analyzer and antenna output port as show in the block diagram below,
b. Spectrum Setting : RBW= 30kHz, VBW≥ RBW, Sweep time = Auto.

8.3 Deviation From Standard

No deviation.

8.4 Test Setup

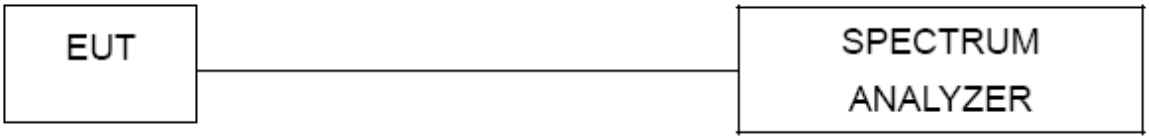

8.5 Eut Operation Conditions

The EUT tested system was configured as the statements of 2.4 Unless otherwise a special operating condition is specified in the follows during the testing.

8.6 Test Result

Temperature：	26 ℃	Relative Humidity：	54%
Pressure：	101kPa	Test Voltage ：	DC 12V
Test Mode ：	TX Mode		

Frequency	20dB bandwidth (kHz)	Limit (kHz)	Result
88.1MHz	96.36	200	PASS

88.1MHz

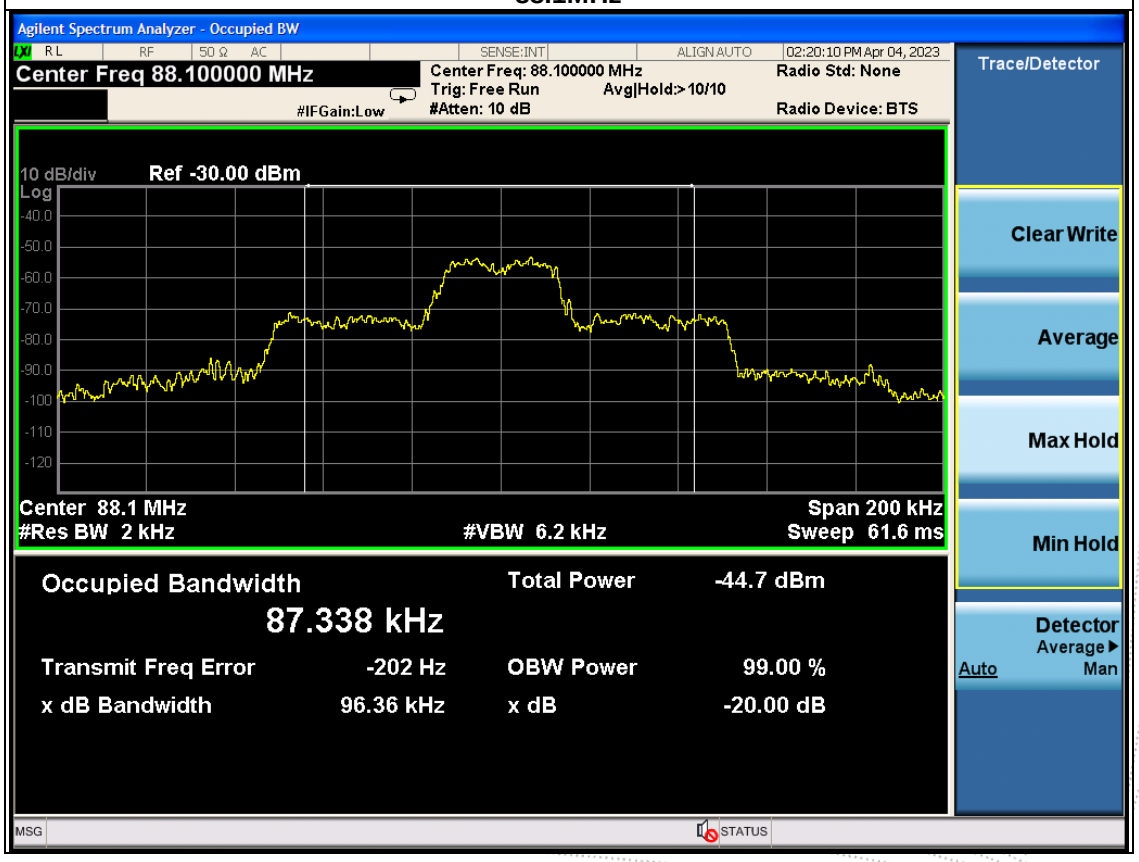

Frequency	20dB bandwidth (kHz)	Limit (kHz)	Result
98MHz	100.6	200	PASS

98MHz

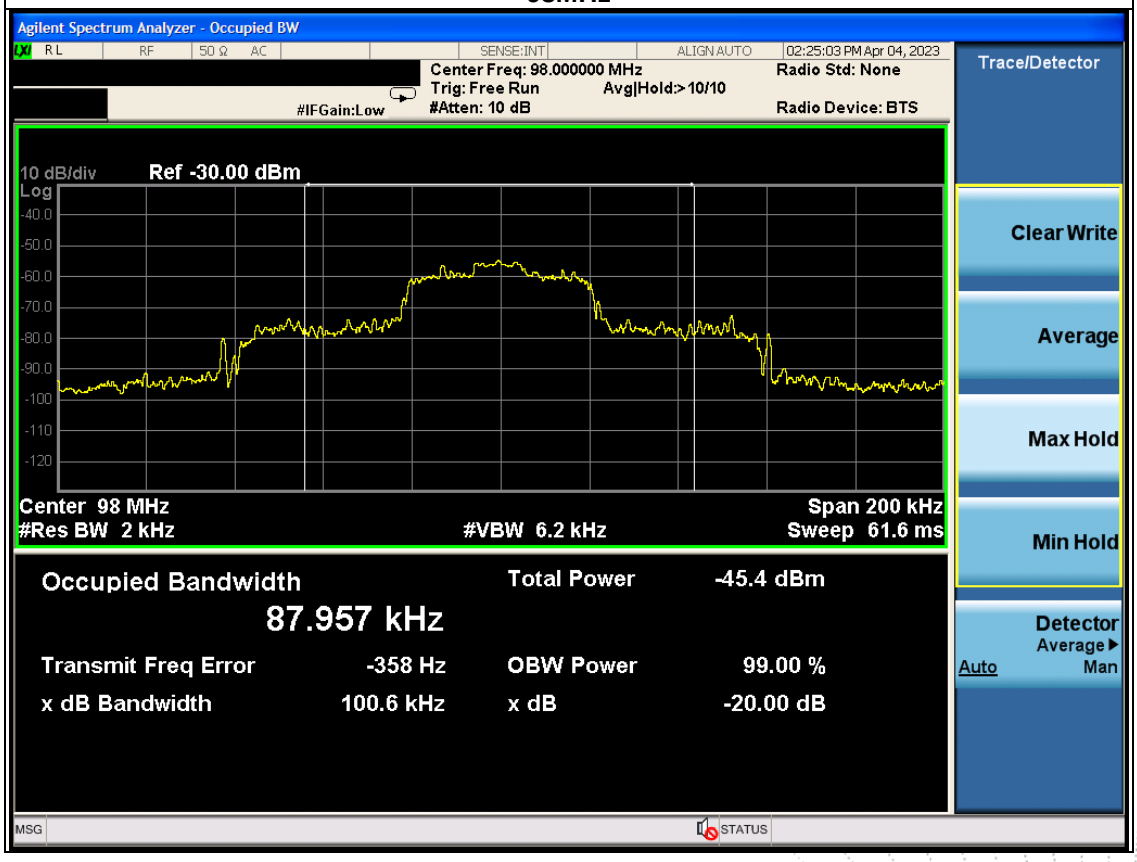

Frequency	20dB bandwidth (kHz)	Limit (kHz)	Result
107.9MHz	114.9	200	PASS

107.9MHz

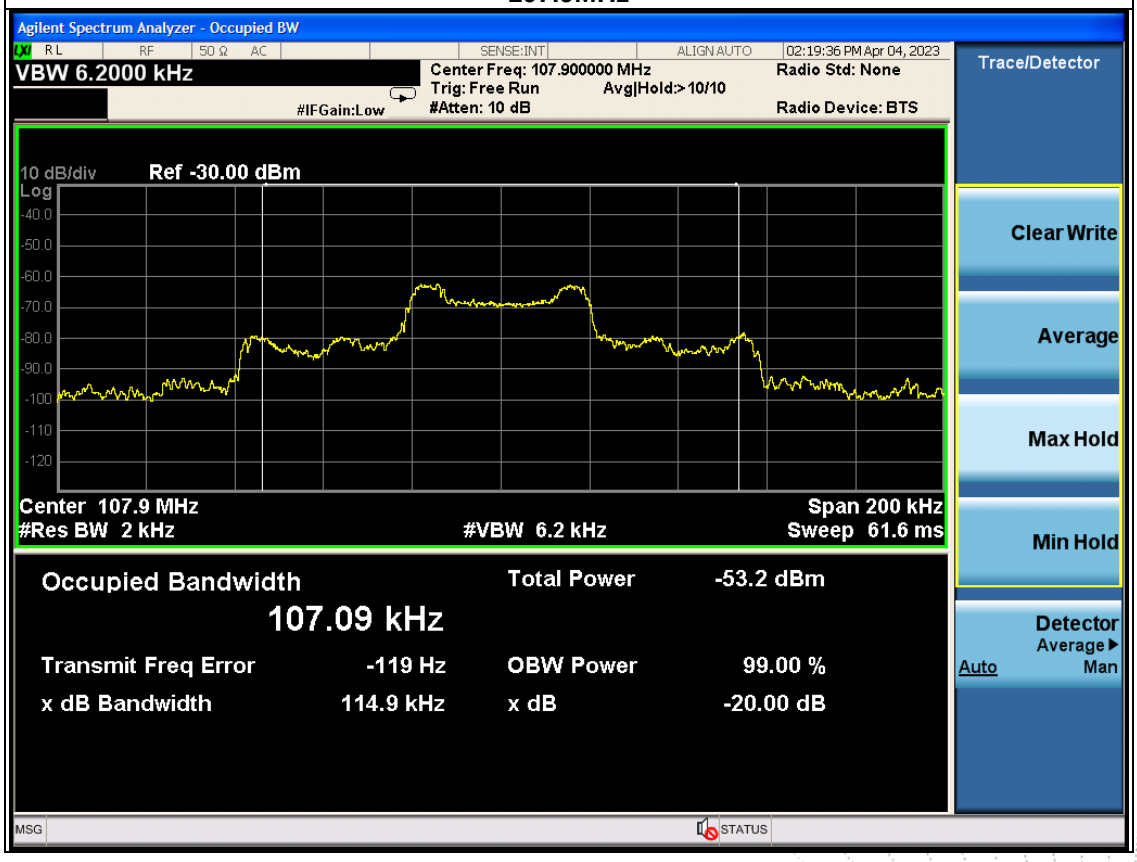

9. Band Edge Measurement

9.1 Block Diagram Of Test Setup

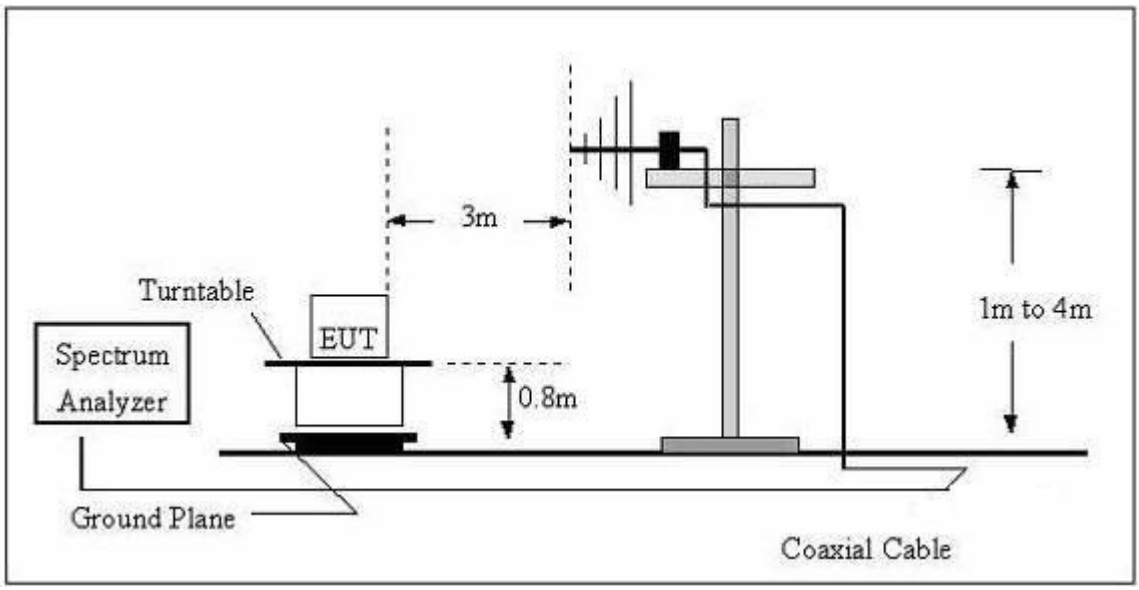

9.2 Applicable Standard

FCC Part15 Paragraph 15.209&15.239
Outside the 200kHz band(as well as outside the 88-108MHz band), the general field strength limits listed in 15.209 apply.

9.3 Test Procedure

a.Check the calibration of the measuring instrument using either an internal calibrator or a known signal from an external generator.

b.Position the EUT without connection to measurement instrument. Turn on the EUT and connect its antenna terminal to measurement instrument via a low loss cable. Then set it to any one measured frequency within its operating range, and make sure the instrument is operated in its linear range.

c.VBW for Peak, Quasi-peak, or Average Detector Function: 3 × RBW

d.Repeat above procedures until all measured frequencies were complete.

Note:

Both horizontal and vertical antenna polarities were tested and performed pretest to three orthogonal axis. The worst case emissions were reported.

9.4 EUT Operation Conditions

The EUT tested system was configured as the statements of 2.4 Unless otherwise a special operating condition is specified in the follows during the testing.

9.5 Test Results

Temperature:	26 ℃	Relative Humidity:	54%
Pressure:	101 kPa	Test Voltage :	DC 12V
Test Mode :	Transmitting		

Mode	Polar (H/V)	Frequency (MHz)	Reading Level (dBuV/m)	Correct Factor (dB)	Measure-ment (dBuV/m)	Limits (dBuV/m)	Result
					QP	QP	
FM	88.1MHz						
	H	75.05	35.78	-19.55	16.23	40.00	PASS
	H	88.00	38.49	-19.58	18.91	40.00	PASS
	V	75.05	33.64	-19.55	14.09	40.00	PASS
	V	88.00	36.36	-19.58	16.78	40.00	PASS
	107.9MHz						
	H	108.00	42.30	-16.67	25.63	43.50	PASS
	H	109.24	40.39	-16.75	23.64	43.50	PASS
	V	108.00	37.23	-16.67	20.56	43.50	PASS
	V	109.24	36.73	-16.69	20.04	43.50	PASS

Remark:
1. Emission Level = Meter Reading + Factor,
Factor = Antenna Factor + Cable Loss – Pre-amplifier.
Over= Emission Level - Limit
2. If the PK measured levels comply with average limit, then the average level were deemed to comply with average limit.
3. In restricted bands of operation, The spurious emissions below the permissible value more than 20dB
4. The amplitude of spurious emissions which are attenuated by more than 20dB below the permissible value has no need to be reported.

10. Antenna Requirement

10.1 Standard Requirement

15.203 requirement: For intentional device, according to 15.203: an intentional radiator shall be designed to ensure that no antenna other than that furnished by the responsible party shall be used with the device.

10.2 EUT Antenna

The EUT antenna is the Internal Antenna. It comply with the standard requirement.

11. EUT Photographs

EUT Photo 1

EUT Photo 2

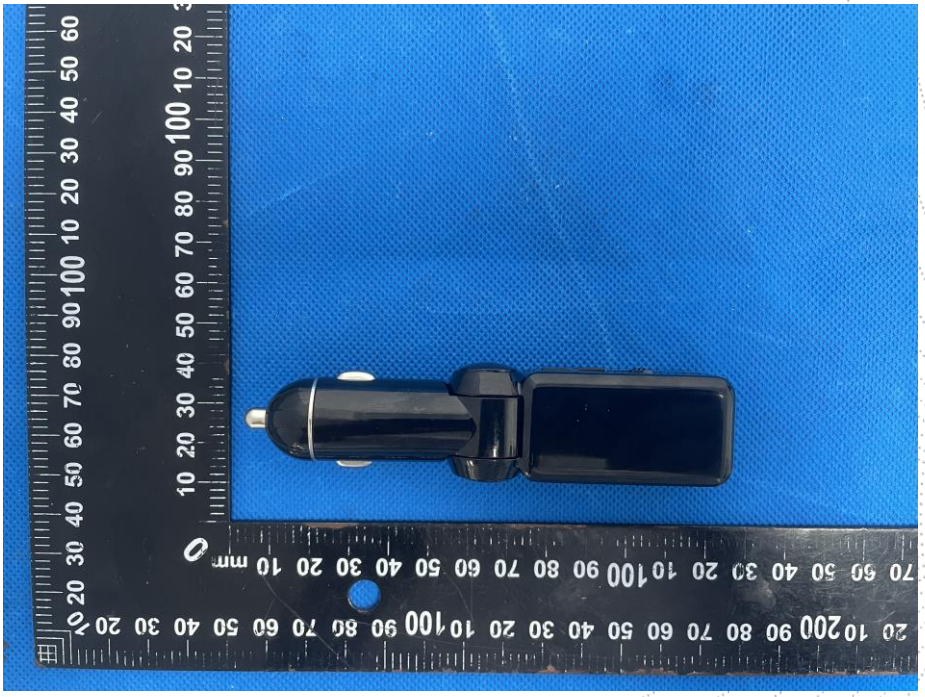

12. EUT Test Setup Photographs

Radiated Measurement Photos

STATEMENT

1. The equipment lists are traceable to the national reference standards.

2. The test report can not be partially copied unless prior written approval is issued from our lab.

3. The test report is invalid without the "special seal for inspection and testing".

4. The test report is invalid without the signature of the approver.

5. The test process and test result is only related to the Unit Under Test.

6. Sample information is provided by the client and the laboratory is not responsible for its authenticity.

7. The test report without CMA mark is only used for scientific research, teaching, enterprise product development and internal quality control purposes.

8. The quality system of our laboratory is in accordance with ISO/IEC17025.

9. If there is any objection to this test report, the client should inform issuing laboratory within 15 days from the date of receiving test report.

Address:
1-2/F., Building B, Pengzhou Industrial Park, No.158, Fuyuan 1st Road, Zhancheng, Fuhai Subdistrict, Bao'an District, Shenzhen, Guangdong, China

TEL：400-788-9558

P.C.: 518103

FAX：0755-33229357

Website：http://www.chnbctc.com

E-Mail：bctc@bctc-lab.com.cn

※※※※※ **END** ※※※※※