UFO STAR SKY NIGHT LIGHT PROJECTOR

Bluetooth Speaker | Creative projection lamp

User instructions

Charging

When charging, the indicator light is red. When it is full, the indicator light will be automatically turned off; the product can be fully charged after charging for 2~3 hours. When the voltage is too low, there will be a beep sound, please charge it in time.

Boot

Turn the lever switch to the left when the power is turned on, the blue status light flashes, and the prompt tone (Bluetooth ready).
Enter the working state. If you do not use it for a long time, please turn the lever switch to the original position to save energy.

Connect to Bluetooth

Open the phone settings - Bluetooth, search for devices, you can find UFO xingkong, pair with the speakers.
After the pairing is successful, the blue status light is always on and the voice prompts the connection to succeed.

Play music

After the Bluetooth connection is successful, you can open the phone music app for music playback.
It is also possible to insert a TF card or connect a USB port and a 3.5mm audio input port for music playback.

Key Description

The buttons from left to right are the previous one, pause, next, night light switch, light rotary switch

Replace the lamp pattern

1. Turn the transparent lamp cover clockwise to the unlocked position, take out the lamp cover, and take out the lamp
2. Take a new piece of light into the transparent lamp cover and align it.
3. Return to the rotating base and rotate it counterclockwise into position.

Charging

Each time the button A is pressed, the projection light mode will change once, for a total of 10 combinations.
Button B projection light 3 brightness adjustment

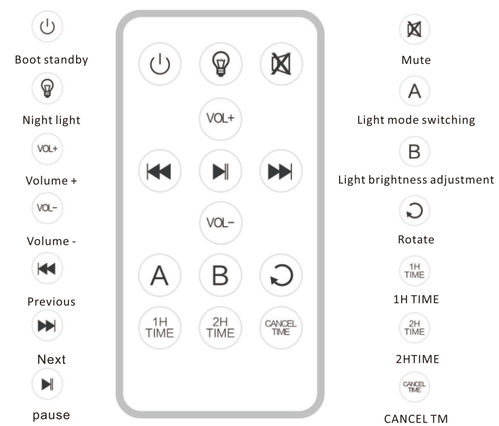

Top view

1.Projection lamp and lampshade
2.Night light
3.Infrared receiving tube
4.Button

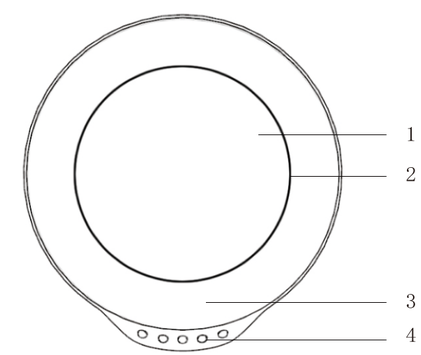

Side view

5.TF card socket
6.USB charging data interface
7.3.5mm audio input
8.Status Indicator
9.Power

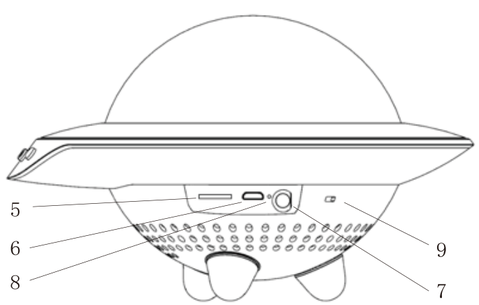

Bottom view

10.Stereo speaker
11.Base

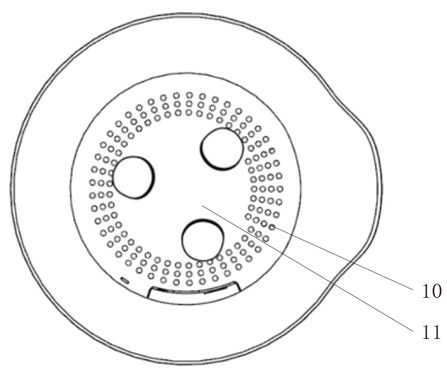

Specifications

Rated voltage:
Rated power:
Battery capacity:
Charging time:
Standby time:
Music time:
Lighting time:

Packing List

- Host
- USB data cable
- Instruction manual
- Warranty Card

Note

1. Please put the product in a stable place.
2. This product is not waterproof and should not be used in a humid environment.
3. Keep away from hot objects, fire sources or electromagnetic radiation objects.
4. Do not use at temperatures below -10 ° C or above 40 ° C.
5. Do not disassemble or modify this product.
6. Do not use this product in a car.
7. This product is not a children's toy/lighting device. Do not let children touch it.
8. Unplug the power after charging is complete, do not charge for a long time.
9. If the battery is completely exhausted, please turn it off and charge it for 20-30 minutes before turning it on.

Maintenance record item

Warranty date	Fault description / fault cause / processing result	Use spare parts	Check date	Signature of maintenance personnel

This warranty card is a quality guarantee and must be filled out as it is. This product is warranted and sold in accordance with the National Three Guarantees Regulations. The package is complete and complete with the warranty. The warranty must be accompanied by the warranty certificate to the nearest service center.

FCC Warning

This device complies with Part 15 of the FCC Rules. Operation is subject to the following two conditions:
(1) This device may not cause harmful interference, and (2) this device must accept any interference received, including interference that may cause undesired operation.

NOTE 1: This equipment has been tested and found to comply with the limits for a Class B digital device, pursuant to part 15 of the FCC Rules. These limits are designed to provide reasonable protection against harmful interference in a residential installation. This equipment generates, uses and can radiate radio frequency energy and, if not installed and used in accordance with the instructions, may cause harmful interference to radio communications. However, there is no guarantee that interference will not occur in a particular installation. If this equipment does cause harmful interference to radio or television reception, which can be determined by turning the equipment off and on, the user is encouraged to try to correct the interference by one or more of the following measures:

- Reorient or relocate the receiving antenna.
- Increase the separation between the equipment and receiver.
- Connect the equipment into an outlet on a circuit different from that to which the receiver is connected.
- Consult the dealer or an experienced radio/TV technician for help.

NOTE 2: Any changes or modifications to this unit not expressly approved by the party responsible for compliance could void the user's authority to operate the equipment.