Smart Button

www.twiins.com

Twiins® Smart Button User Guide

English

Getting Started 2
Using the Smart Button 5
Troubleshooting 6
Other Information 6

Español

Getting Started 2
Using the Smart Button 5
Troubleshooting 7
Other Information 8

Deutsch

Getting Started 2
Using the Smart Button 5
Troubleshooting 7
Other Information 8

Français

Getting Started 2
Using the Smart Button 5
Troubleshooting 7
Other Information 8

Italiano

Getting Started 2
Using the Smart Button 5
Troubleshooting 7
Other Information 8

Português

Getting Started 2
Using the Smart Button 5
Troubleshooting 7
Other Information 8

Ελληνικά

Getting Started 2
Using the Smart Button 5
Troubleshooting 7
Other Information 8

Polski

Getting Started 2
Using the Smart Button 5
Troubleshooting 7
Other Information 8

Getting Started

EN

Twiins® Smart Button is a push-to-talk device that works with the Zello® walkie-talkie app for conversations with other riders and groups through helmet audio and smartphones, with one simple press.

Twiins® Smart Button works with any smartphone-connected headset. For the best experience choose **Twiins® Bluetooth® helmet audio devices**, the only headsets that fit seamlessly and comfortably **inside** your helmet. Available separately or in combined packs with a smart button.

Twiins® Smart Button is a handlebar Push-To-Talk wireless device for ZELLO APP users. Zello APP, Logos and brand are intellectual property and registered brands of ZELLO, Inc. Visit www.zello.com to learn more about ZELLO services and communication solutions.

1 Charge your Twiins® Smart Button

Fully charge the device before first use.

1. Carefully lift the rubber USB cover on the side of the smart button from the end marked with an arrow. Do not detach.
2. Insert a USB-C charging cable and connect to a DC 5.0V charger until fully charged and the LED turns green.
3. The USB cover is waterproof to IPX5. Close by inserting the cover perpendicular with and into the USB socket, pushing firmly flush into the device. You may need to squeeze the cover slightly. Failure to close the cover properly could lead to water ingress.

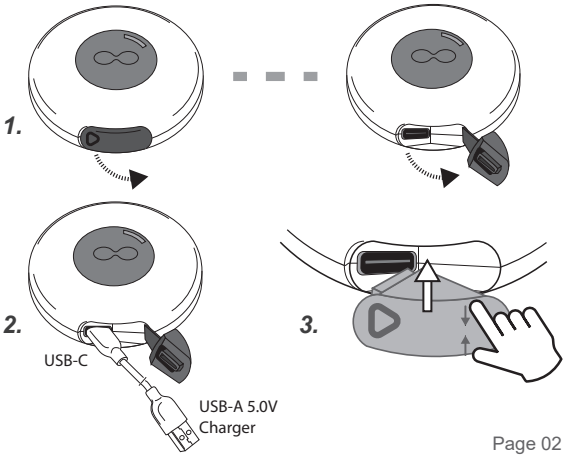

Battery status:

- Remaining charge is indicated by the Smart Button and not the phone or app.
- Turn on the Smart Button.
- Battery status indication is shown first before the device starts blinking red and blue for a connection.

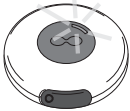

Battery Capacity		
<25%	RED	x 2
25% - 50%	RED & BLUE	x 2
50% - 90%	RED & BLUE	x 3
>90%	BLUE	x 3

EN

2 Fit universal handlebar mount

1. The mount is universal, designed to fit all bike handles perfectly. Pass the flat end of the strap, teeth side down, through the slot at the top of the universal handlebar mount, from the front.
2. Pull until flush. The square end of the strap will fit flush into the front of the mount and will lock in place. It only fits one way.
3. Place the ridged foot of the mount under the handle in easy reach of your thumb. The mount should face the rider. Ensure you still have access to all bike controls.
4. Pass the strap around the back of the handle, then over and through the remaining slot at the top of the universal handlebar mount. Pull tightly until secure.
5. For extra force, use **pliers** to pull the strap **strongly downward** until it is as tight as it will go (i.e. most teeth are engaged). You may need to re-tighten in hot weather.
6. Pull the end of the strap through the slot in the bottom edge of the mount until the teeth lock tightly. The mount is now locked. Repeat steps 5 and 6 if it moves.

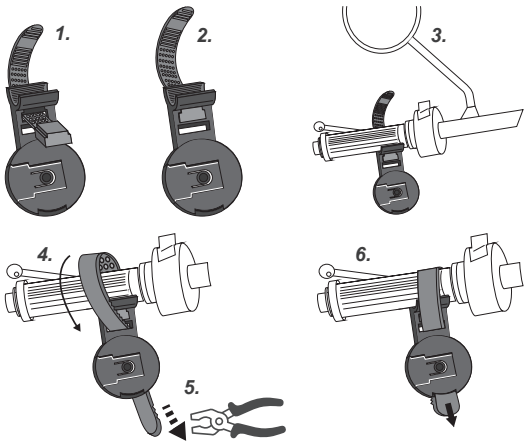

3 Install the Zello® App

Install the Zello® app on your smartphone from the **Apple® App Store** or **Google® Play** for Android. Follow the installation instructions on www.zello.com for your device (register, share contacts, allow device permissions, etc.).

EN

4 Pair Smart Button & Headset with a phone

Pairing the Smart Button

1. Ensure your phone's wireless connections are ON.
2. Ensure no other wireless connections are around.
3. Ensure Geolocation is enabled on your phone.
4. Long press the smart button until it flashes red and blue continuously.
5. Open the Zello app and go to *Menu* ⇨ *Options* (Android) or *Settings* (IOS) ⇨ *Push-to-talk button*.
6. Press the blue "+" bottom right of the screen (Android) or blue "*Add new devices*" (IOS).
7. Short press the Smart Button. The new button is added to the list as "*Blu-PTT*".
8. The Smart Button will flash blue every 30 seconds 10 times, when paired.

Pair Bluetooth® Headset

Follow the instructions in the Twiins® Headset manual or the manufacturer's instructions for any other wireless headset you are using.

Note:

- Ensure your audio device is selected as the source for voice and sound in the Zello™ App.
- If Geolocation in your smartphone is not enabled, Zello® and the Smart Button may not function properly.

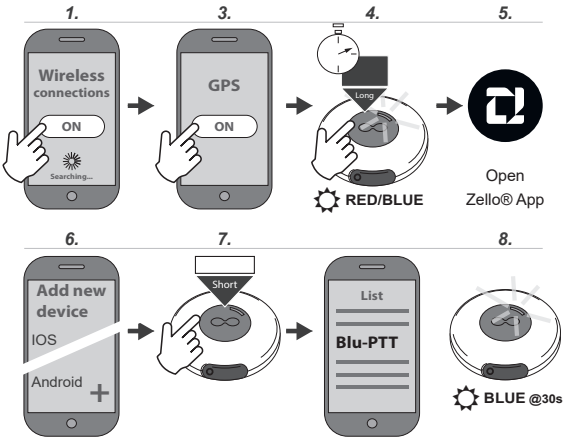

4 Attach Smart Button onto universal mount

- Slide the rear of the Smart Button onto the bracket on the mount, from left to right, until you hear a “click” to signal it is firmly attached.
- Ensure the USB cover is facing down (to protect from water).
- To remove the Smart Button when leaving the bike, simply slide left and off the mount.

Using the Smart Button

Twiins® Smart Button operation is simple. It is a dedicated push-to-talk button to speak with preset contacts, other riders and groups (‘channels’) through helmet audio and smartphones using the Zello™ App.

Turn on your Twiins® Smart Button

- Wireless connections and Zello® must be active on your phone.
- Ensure the Smart Button and Headset are paired.
- Ensure Geolocation is active in your phone.
- To turn ON, long press the button for five seconds.
- To turn OFF: I**f not paired,** long press the button for 5 seconds. **If paired with a phone**, turn off wireless on your phone or move the Smart Button out of range - it automatically turns off after 5 minutes.

Set volume

- Volume is controlled on the phone and in the Zello® app.
- Set the desired volume on the phone.
- In the Zello® app, go to *Main Menu* ⇨*Options* ⇨ *Audio*, to set general volume. You can also set individual volume levels on the bottom right of each contact screen in the app.

Set who you want to talk to

To use the Smart Button without touching your phone, you must tell it who you want to talk to (person or group). You must do this before riding.

- Set up a new channel in the app using *Main Menu* ⇨ *Channels* ⇨ ‘+’ ⇨ *Create Channel*.
- In the channel Talk screen, select *Add Contacts* ⇨ *Select a Contact* ⇨ *Invite*.
- Make sure your contact accepts the invitation.
- To avoid interruption from other channels on your ride, select the channel in the app, then ⋮ ⇨ *Status* ⇨ *SOLO*. Communications from anyone not in that channel remain on hold until the active channel is exited.
- You can change channel/group using the app, when safe to do so.

Talk

- Press and keep holding the Twiins® Smart Button to speak (the indicator turns solid red).
- Release the button when finished speaking.
- If someone in your channel is already talking, you will hear a busy signal, and you must wait until they stop before you can be heard.
- Communication uses data and will only work when your smartphone is connected to a 2G mobile network or above.
- You may also wish to turn off the screen button on your smartphone to prevent accidental activation in your pocket. On the App, go to *Main Menu* ⇨ *Options* ⇨ *Push to Talk Options* ⇨ *Screen Button* ⇨ select *Disabled*.

Ideal for fleet communication

Equip your motorbike fleet or delivery team with a Twiins® Smart Button and Twiins® Headset for effortless communication. Arrange individual contacts in your team on different channels in the App, as needed. 200+ contacts can be added to a channel. You can contact them from the desktop version of the App. And they can talk with you or other riders with one press of a Twiins® Smart Button.

For further details, refer to the Zello® website and Zello® communication solutions for fleets.

Troubleshooting

Twiins® Smart Button will provide years of trouble-free use if cared for and paired correctly.

Pairing

When pairing for the first time, be careful to ensure that the phone is in wireless connection discovery mode (searching for devices) and the Twiins® Smart Button is also in pairing mode by long-pressing the button **until the indicator flashes red and blue continuously.** They will not pair in any other mode. The phone and Headset should be around 1 metre apart for first pairing.

Carefully follow steps in this manual to connect the Twiins® Smart Button with the Zello® app. To connect Twiins® headsets or other brands of headset, see their separate manuals.

After the first pairing, the phone/app and Twiins® Smart Button should connect automatically when both are on, and wireless connections are active on the phone.

Note: Intercom modes and the Zello® app.

To use a Twiins® Headset with a Smart Button and the Zello® app, please **disconnect** the INTERCOM TO PASSENGER function of the headset. To use the intercom, please log out of Zello® and close the app on your phone. **The Intercom function of headsets is not compatible with Zello®.**

Learn more

Find out more about the exciting range of Twiins® Headsets, the Twiins® Smart Button and other devices designed by Twiins®, and further use and troubleshooting information, FAQs and video tutorials at:

www.twiins.com

Technical specifications, important safety notices, battery safety, warranty, disposal and other regulatory information are supplied in a **separate booklet** accompanying this product. **Please study all literature supplied with this product carefully.**

Copyright

Copyright © 2024 MAT PRODUCT AND TECHNOLOGY, SL

This guide is protected under international copyright laws.

No part of this guide may be reproduced, distributed, translated, or transmitted in any form or by any means, electronic or mechanical, including photocopying, recording, or storing in any information storage and retrieval system.

Trademarks

TWIINS® and the TWIINS® logo are registered trademarks of MAT PRODUCT AND TECHNOLOGY, SL

All other trademarks and copyrights mentioned here are the property of their respective owners.

Manual version: V5.1. June 2024