Ai-M61-32S Specification

Version V1.1.0

Copyright ©2023

Copyright © 2023 Shenzhen Ai-Thinker Technology Co., Ltd All Rights Reserved

Document resume

Version	Date	Develop/revise content	Edition	Approve
V1.1.0	2023.03.16	First Edition	Shengxin Zou	Ning Guan

Copyright © 2023 Shenzhen Ai-Thinker Technology Co., Ltd All Rights Reserved

Content

1. Product Overview 4
1.1. Characteristic 4
2. Main parameters 6
2.1. Static electricity requirement 6
2.2. Electrical characteristics 7
2.3. Wi-Fi RF Performance 7
2.4. BLE RF Performance 8
2.5. Power 8
3. Appearance Dimensions 9
4. Pin Definition 10
5. Schematic 13
6. Antenna parameters 14
6.1. Antenna test prototype 14
6.2. Antenna S parameter 14
6.3. Antenna Gain and Efficiency 15
6.4. Antenna pattern 15
7. Design Guidance 16
7.1. Module application circuit 16
7.2. Recommended PCB package size 17
7.3. Antenna layout requirements 17
7.4. Power supply 18
7.5. GPIO 19
8. Storage conditions 20
9. Reflow welding curve diagram 20
10. Product Packaging Information 21
11. Contact us 21
Disclaimer and copyright notice 22
Notice 22

Copyright © 2023 Shenzhen Ai-Thinker Technology Co., Ltd All Rights Reserved

1. Product Overview

Ai-M61-32S is a Wi-Fi 6+BLE5.3 module developed by Shenzhen Ai-Thinker Technology Co., Ltd. The module is equipped with a BL618 chip as the core processor and supports Wi-Fi 802.11b/g/n/ax Protocol and BLE protocol, support Thread protocol. The BL618 system includes a low-power 32-bit RISC-V CPU with a floating-point unit, DSP unit, cache and memory, with a maximum frequency of 320M.

The Ai-M61-32S module has rich peripheral interfaces, including DVP, MJPEG, Dispaly, Audio Codec, USB2.0, SDU, Ethernet (EMAC), SD/MMC (SDH), SPI, UART, I2C, I2S, PWM, GPDAC, GPADC, ACOMP, GPIO, etc. It can be widely used in audio and video multimedia, Internet of Things (IoT), mobile devices, wearable electronic devices, smart home and other fields.

Ai-M61-32S module Sec Eng module supports AES/SHA/PKA/TRNG and other functions, supports image encryption and signature startup, and meets various security application requirements in the Internet of Things field.

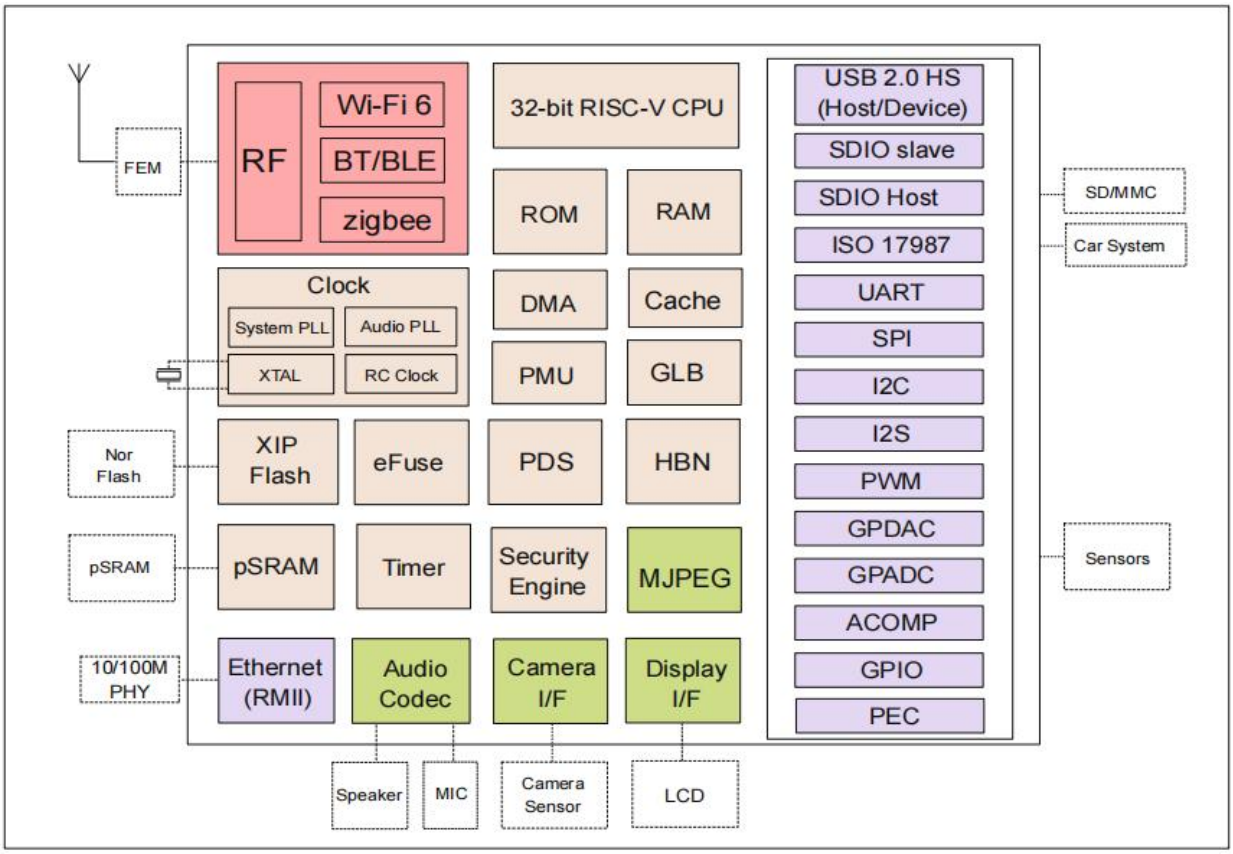

Figure 1 Main chip architecture diagram

1.1. Characteristic

- The package is SMD-40

Copyright © 2023 Shenzhen Ai-Thinker Technology Co., Ltd All Rights Reserved

- Support 2.4GHz working frequency band
- Support IEEE 802.11 b/g/n/ax
- Support BLE5.3
- Support Thread
- Support Wi-Fi/BLE/Thread coexistence
- Wi-Fi security supports WPS/WEP/WPA/WPA2/WPA3
- Support 20/40MHz bandwidth, 1T1R, maximum rate 229.4 Mbps
- Support STA, SoftAP, STA+SoftAP and sniffer mode
- 32-bit RISC-V CPU with FPU and DSP, the highest frequency can reach 320M
- 4MB pSRAM，532KB SRAM，128KB ROM，4Kb eFuse
- Support DVP, MJPEG, Dispaly, Audio Codec, USB2.0, SDU, Ethernet (EMAC), SD/MMC (SDH), SPI, UART, I2C, I2S, PWM, GPDAC, GPADC, ACOMP and GPIO, etc.
- Support Camera Sensor DVP interface
- Support Video Codec MJPEG encoding
- Support LCD display (QSPI, DBI and RGB)
- Integrated RF Balun, PA/LNA
- Support secure boot; secure debugging
- Support XIP QSPI On-The-Fly AES Decryption (OTFAD)
- Support TrustZone
- Support AES-CBC/CCM/GCM/XTS mode
- Support MD5、SHA-1/224/256/384/512
- Support TRNG（True Random Number Generator）
- Support PKA (Public Key Accelerator) for RSA/ECC
- BLE Fast Wi-Fi connection is supported
- Universal AT instruction for quick start
- Support secondary development, integrated Windows, Linux development environment

Copyright © 2023 Shenzhen Ai-Thinker Technology Co., Ltd All Rights Reserved

2. Main parameters

Table 1 Description of the main parameters

Model	Ai-M61-32S
Package	SMD-40
Size	25.5*18.0*3.1(±0.2)mm
Antenna	on-board PCB antenna/IPEX connector
Frequency	2400 ~ 2483.5MHz
Operating temperature	-40°C ~ 85°C
Storage temperature	-40°C ~ 125°C, < 90%RH
Power supply	Support voltage 2.97V ~ 3.6V，supply current ≥500mA
Interface	Support DVP, MJPEG, Dispaly, Audio Codec, USB2.0, SDU, Ethernet (EMAC), SD/MMC (SDH), SPI, UART, I2C, I2S, PWM, GPDAC, GPADC, ACOMP and GPIO, etc.
IO	29
UART rate	Default 115200 bps
Security	WPS/WEP/WPA/WPA2/WPA3
Flash	Default 8MByte，Support expansion

2.1. Static electricity requirement

Ai-M61-32S is an electrostatic sensitive device. Therefore, you need to take special precautions when carrying it.

Figure 2 ESD preventive measures

Copyright © 2023 Shenzhen Ai-Thinker Technology Co., Ltd All Rights Reserved

2.2. Electrical characteristics

Table 2 Electrical characteristics table

Parameters		Conditio	Min.	Typical value	Max.	Unit
Voltage Supply		VDD	2.97	3.3	3.6	V
I/O	VIL	-	-	-	0.3*VDDIO	V
	VIH	-	0.7*VDDIO	-	-	V
	VOL	-	-	0.1*VDDIO	-	V
	VOH	-	-	0.9*VDDIO	-	V
	IMAX	-	-	-	15	mA

2.3. Wi-Fi RF Performance

Table 3 Wi-Fi RF performance table

Description	Typical value			Unit
Frequency range	2400 ~ 2483.5MHz			MHz
Output Power				
Mode	**Min.**	**Typical**	**Max.**	**Unit**
11ax Mode HE40，PA output power	-	16	-	dBm
11ax Mode HE20，PA output power	-	17	-	dBm
11n Mode HT40， PA output power	-	19	-	dBm
11n Mode HT20， PA output power	-	19	-	dBm
11g Mode, PA output power	-	19	-	dBm
11b Mode, PA output power	-	22	-	dBm
Receive Sensitivity				
Mode	**Min.**	**Typical**	**Max.**	**Unit**
11b， 1 Mbps	-	-98	-	dBm
11b， 11 Mbps	-	-90	-	dBm
11g， 6 Mbps	-	-93	-	dBm
11g， 54 Mbps	-	-76	-	dBm
11n， HT20 (MCS7)	-	-73	-	dBm
11ax， HE20 (MCS9)	-	-70	-	dBm
11ax， HE40 (MCS9)	-	-67	-	dBm

Copyright © 2023 Shenzhen Ai-Thinker Technology Co., Ltd All Rights Reserved

2.4. BLE RF Performance

Table 4 BLE RF performance table

Description	Typical value			Unit
Frequency range	2400 ~ 2483.5MHz			MHz
Output Power				
Rate Mode	**Min.**	**Typical value**	**Max.**	**Unit**
1Mbps	-	10	15	dBm
2Mbps	-	10	15	dBm
Receive Sensitivity				
Rate Mode	**Min.**	**Typical value**	**Max.**	**Unit**
1Mbps sensitivity @30.8%PER	-	-99	-	dBm
2Mbps sensitivity @30.8%PER	-	-97	-	dBm

2.5. Power

The following power consumption data is based on a 3.3V power supply and an ambient temperature of 25°C.

- POUT power for all transmit modes is measured at the antenna interface.
- All emission data is based on 100% duty cycle, measured in continuous emission mode.

Table 5 Power consumption

Mode	Min.	AVG	Max.	Unit
Tx 802.11b，11Mbps，POUT=+22dBm	-	374	-	mA
Tx 802.11g， 54Mbps， POUT =+19dBm	-	331	-	mA
Tx 802.11n， MCS7， POUT =+19dBm	-	328	-	mA
Tx 802.11ax， MCS7， POUT =+19dBm	-	293	-	mA
Rx 802.11b，packet length 1024 byte	-	64	-	mA
Rx 802.11g，packet length 1024 byte	-	64	-	mA
Rx 802.11n，packet length 1024 byte	-	64	-	mA
Rx 802.11ax，packet length 1024 byte	-	64	-	mA

Copyright © 2023 Shenzhen Ai-Thinker Technology Co., Ltd All Rights Reserved

3. Appearance Dimensions

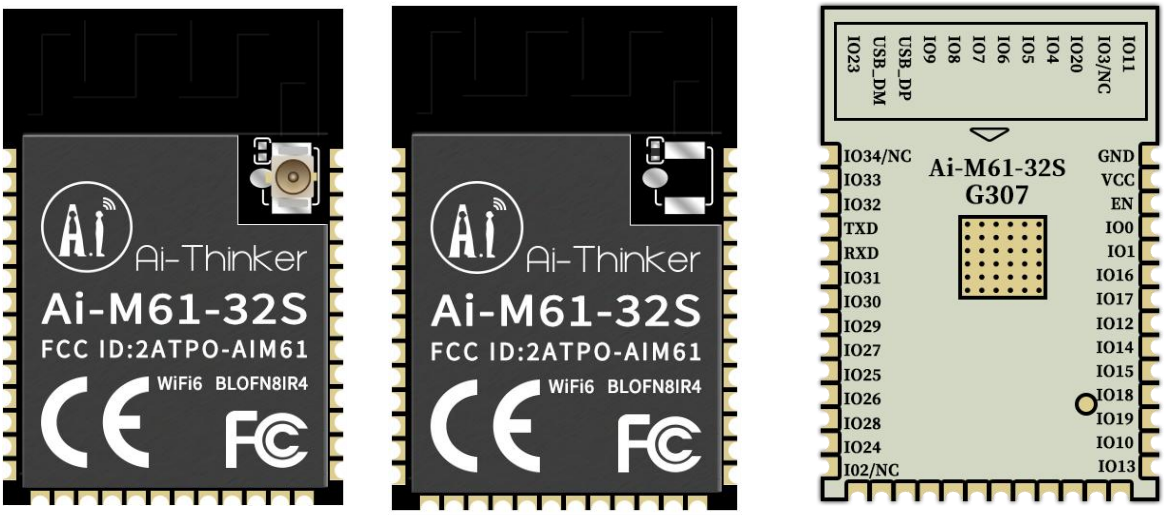

Front Front Back

Figure 3 Appearance (the rendering is for reference only, the actual object shall prevail)

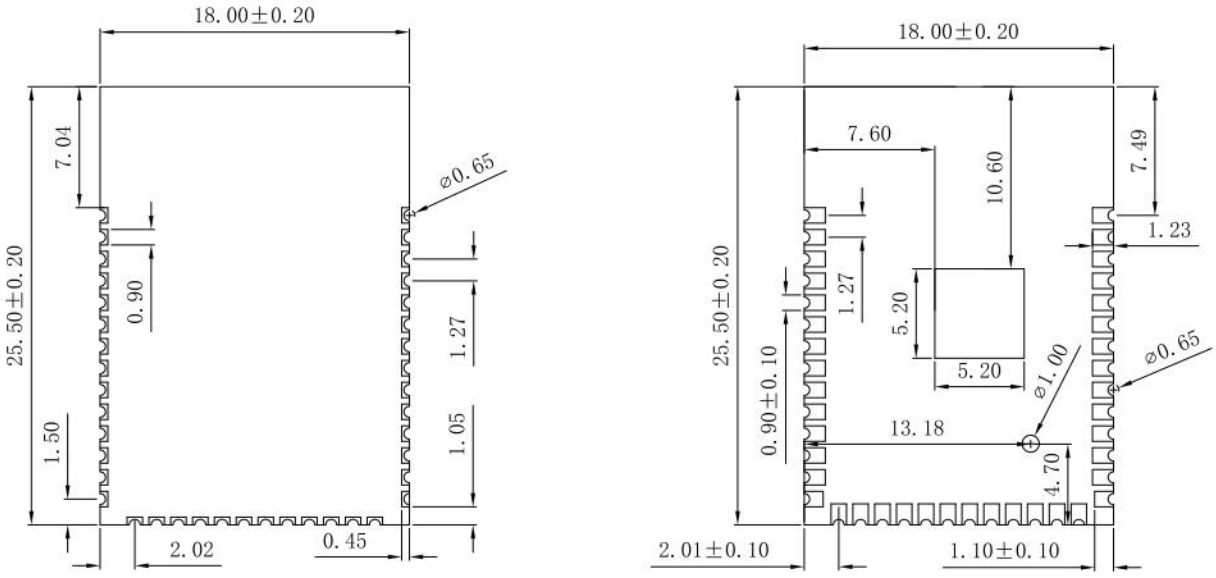

Front Back

Figure 4 Dimension diagram

Copyright © 2023 Shenzhen Ai-Thinker Technology Co., Ltd All Rights Reserved

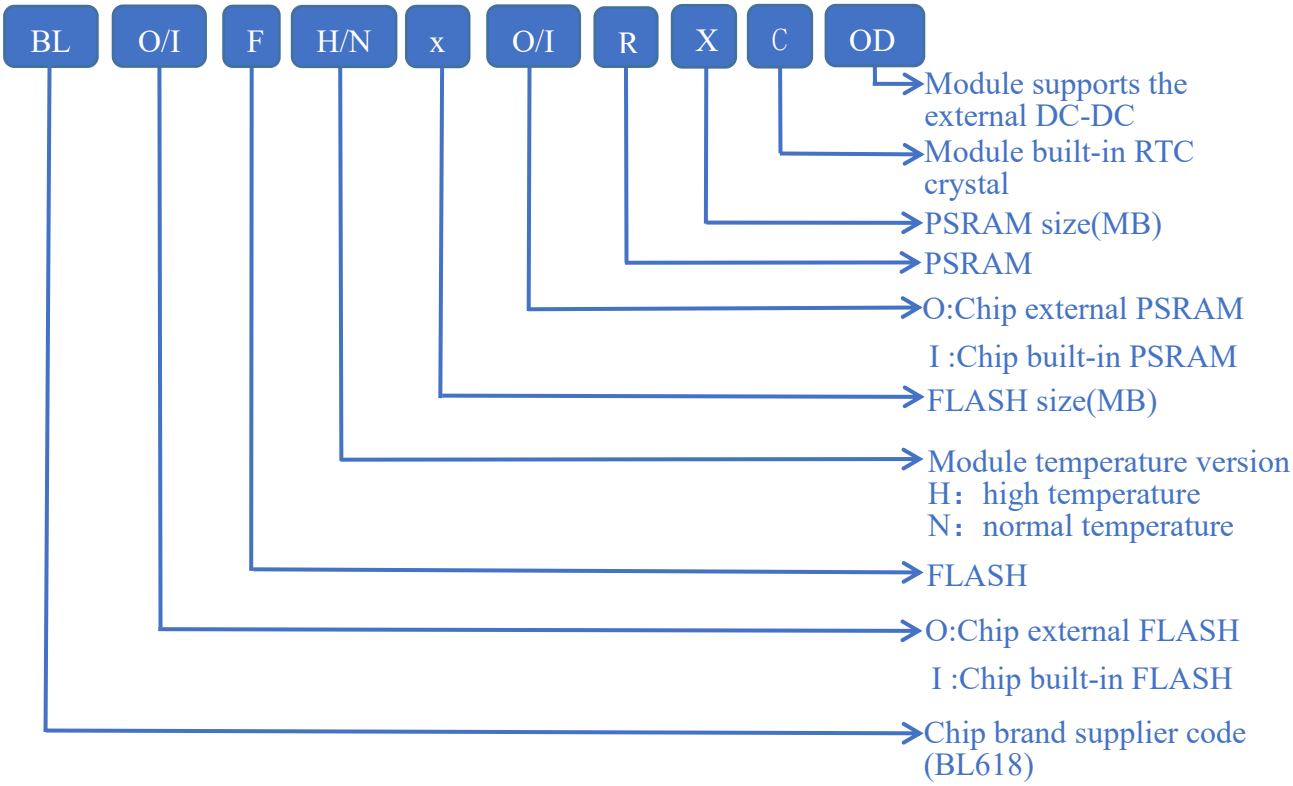

Figure 5 Shield printing information

4. Pin Definition

The Ai-M61-32S module has a total of 40 pins connected, such as the pin schematic diagram, and the pin function definition table is the interface definition.

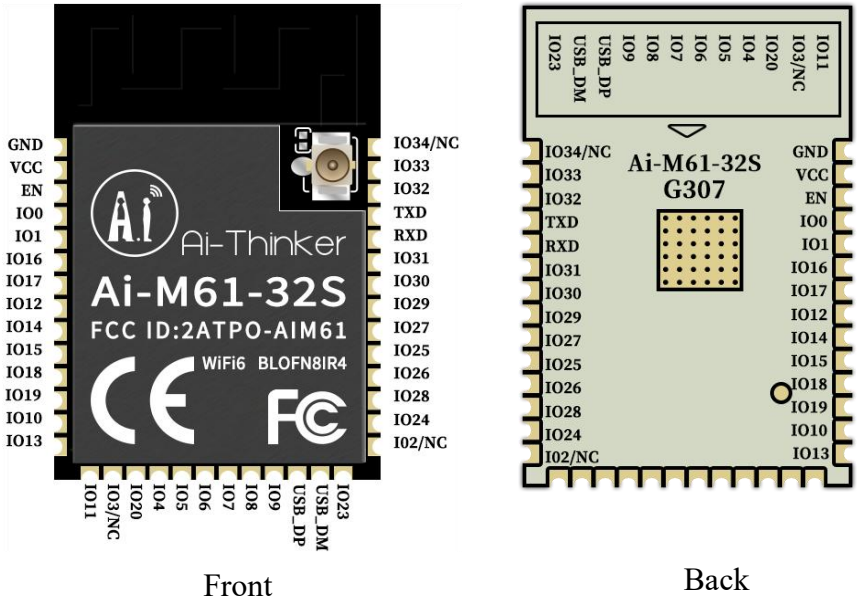

Figure 6 Schematic diagram of module pins

Copyright © 2023 Shenzhen Ai-Thinker Technology Co., Ltd All Rights Reserved

Table 6 Pin function definition table

No.	Name	Function
1	GND	Ground
2	VCC	3.3V power supply; the output current of the external power supply is recommended to be above 500mA
3	EN	Default as chip enable, active high
4	IO0	GPIO0/SPI_SS/I2S_BCLK/I2C_SCL/PWM0/ADC_CH9
5	IO1	GPIO1/SPI_SCLK/I2S_FS/I2C_SDA/PWM0/ADC_CH8
6	IO16/NC	Available by default, this IO port is shared with the 32.768KHz crystal oscillator input pin inside the module. If you customize a module with an internal patch 32.768KHz crystal oscillator, the IO will be in NC state. GPIO16/SPI_SS/I2S_BCLK/I2C_SCL/XTAL_32K_IN/PWM0
7	IO17/NC	Available by default, this IO port is shared with the internal 32.768KHz crystal oscillator output PIN of the module. If you customize a module with an internal patch 32.768KHz crystal oscillator, the IO will be in NC state. GPIO17/SPI_SCLK/I2S_FS/I2C_SDA/XTAL_32K_OUT/PWM0
8	IO12	GPIO12/SPI_SS/SDH_CLK/SF3_D0/I2S_BCLK/I2C_SCL/PWM0/ADC_CH6
9	IO14	GPIO14/SPI_MOSI/SPI_MISO/SDH_DAT3/SF3_D1/I2S_DI/I2S_RCLK_O/I2C_SCL/PWM0/ADC_CH4
10	IO15	GPIO15/SPI_MOSI/SDH_DAT2/SF3_CS/I2S_DO/I2S_RCLK_O/I2C_SDA/PWM0
11	IO18	GPIO18/SPI_MISO/I2S_DI/I2S_RCLK_O/I2C_SCL/PWM0
12	IO19	GPIO19/SPI_MOSI/I2S_DO/I2S_RCLK_O/I2C_SDA/PWM0/ADC_CH1
13	IO10	GPIO10/SPI_MISO/SDH_DAT1/SF2_D3/I2S_DI/I2S_RCLK_O/I2C_SCLPWM0/ADC_CH7
14	IO13	GPIO13/SPI_SCLK/SDH_CMD/SF3_D2/I2S_FS/I2C_SDA/PWM0/ADC_CH5
15	IO11	GPIO11/SPI_MOSI/SDH_DAT0/SF3_CLK/I2S_DO/I2S_RCLK_O/I2C_SDA/PWM0
16	IO3/NC	The default is NC, which cannot be used. If you need to use it, please contact Ai-Thinker. GPIO3/SPI_MOSI/I2S_DO/I2S_RCLK_O/I2C_SDA/PWM0/ADC_CH3
17	IO20	GPIO20/SPI_SS/I2S_BCLK/I2C_SCL/PWM0/ADC_CH0

Copyright © 2023 Shenzhen Ai-Thinker Technology Co., Ltd All Rights Reserved

18-23	IO4-IO9	The default is NC, which cannot be used. This IO port is shared with the module's Flash pin, and cannot be used in the state of external FLASH.
24	USB-DP	USB_DP
25	USB-DM	USB_DM
26	IO23	GPIO23/SPI_MOSI/I2S_DO/I2S_RCLK_O/I2C_SDA/PWM0
27	IO2/NC	The default is NC, which cannot be used. If you need to use it, please contact Ai-Thinker. GPIO2/SPI_MISO/I2S_DI/I2S_RCLK_O/I2C_SCL/PWM0/ADC_CH2
28	IO24	GPIO24/SPI_SS/I2S_BCLK/I2C_SCL/PWM0
29	IO28	GPIO28/SPI_SS/I2S_BCLK/I2C_SCL/PWM0/ADC_CH11
30	IO26	GPIO26/SPI_MISO/I2S_DI/I2S_RCLK_O/I2C_SCL/PWM0
31	IO25	GPIO25/SPI_SCLK/I2S_FS/I2C_SDA/PWM0
32	IO27	GPIO27/SPI_MOSI/I2S_DO/I2S_RCLK_O/I2C_SDA/PWM0/ADC_CH10
33	IO29	GPIO29/SPI_SCLK/I2S_FS/I2C_SDA/PWM0
34	IO30	GPIO30/SPI_MISO/I2S_DI/I2S_RCLK_O/I2C_SCL/PWM0
35	IO31	GPIO31/SPI_MOSI/I2S_DO/I2S_RCLK_O/I2C_SDA/PWM0
36	RXD	RXD/GPIO22/SPI_MOSI/SPI_MISO/I2S_DI/I2S_RCLK_O/I2C_SCL/PWM0
37	TXD	TXD/GPIO21/SPI_SCLK/I2S_FS/I2C_SDA/PWM0
38	IO32	GPIO32/SPI_SS/I2S_BCLK/I2C_SCL/PWM0
39	IO33	GPIO33/SPI_SCLK/I2S_FS/I2C_SDA/PWM0
40	IO34/NC	The default is NC, which cannot be used. If you need to use it, please contact Ai-Thinker. GPIO34/SPI_MISO/I2S_DI/I2S_RCLK_O/I2C_SCL/PWM0
Note: 1. GPIO2 is used as Bootstrap. When the power level is high at the moment of power-on, the module enters the programming mode; when the power is low at the moment of power-on, the module starts normally.		

Copyright © 2023 Shenzhen Ai-Thinker Technology Co., Ltd All Rights Reserved

5. Schematic

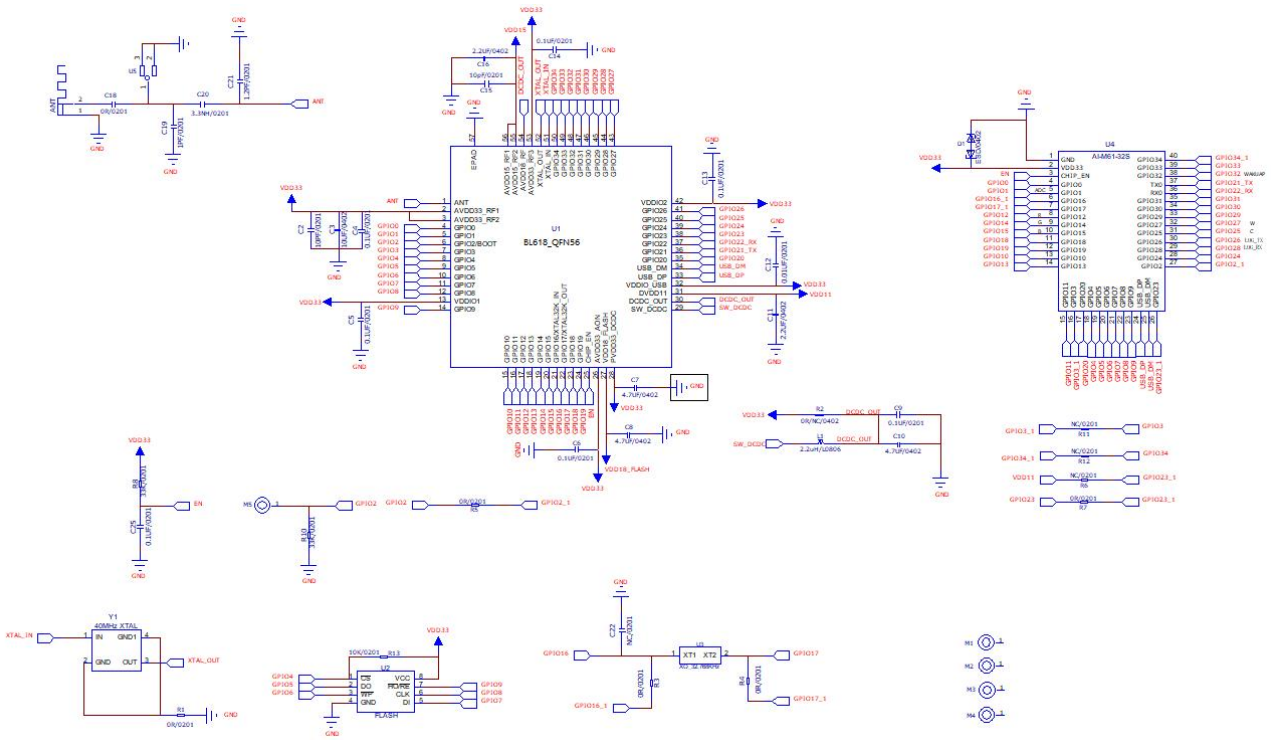

Figure 7 Module schematic

Copyright © 2023 Shenzhen Ai-Thinker Technology Co., Ltd All Rights Reserved

6. Antenna parameters

6.1. Antenna test prototype

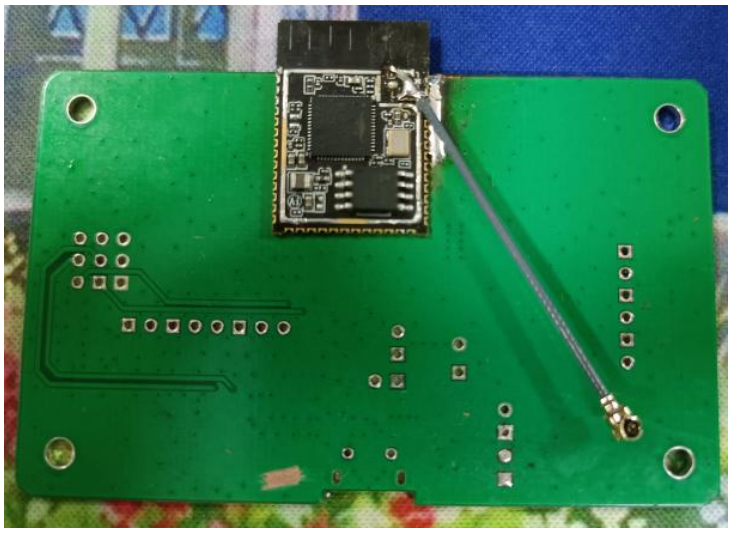

Figure 8 Antenna schematic diagram of antenna test prototype

6.2. Antenna S parameter

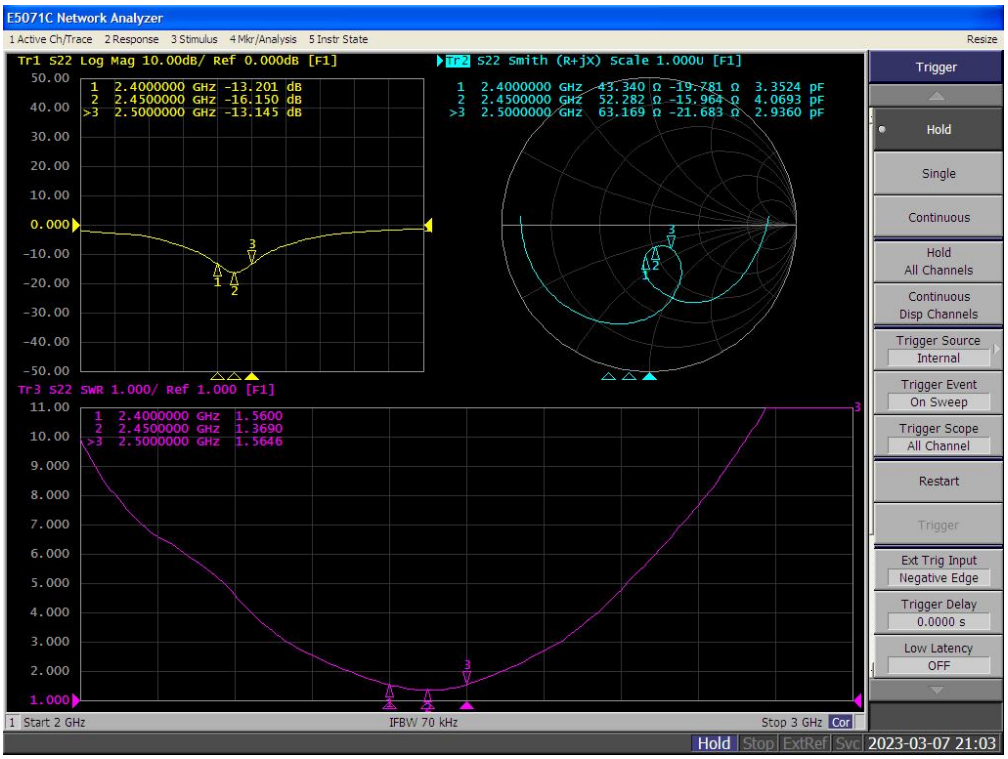

Figure 9 Antenna S parameters

Copyright © 2023 Shenzhen Ai-Thinker Technology Co., Ltd All Rights Reserved

6.3. Antenna Gain and Efficiency

Table 7 Antenna Gain and efficiency

Frequency ID	1	2	3	4	5	6	7	8	9	10	11
Frequency(MHz)	2400	2410	2420	2430	2440	2450	2460	2470	2480	2490	2500
Gain (dBi)	2.35	2.23	2.01	1.98	2.09	2.28	2.50	2.59	2.52	2.35	2.14
Efficiency (%)	67.69	67.54	66.27	67.34	68.12	68.41	68.86	68.36	67.45	66.04	64.96

6.4. Antenna pattern

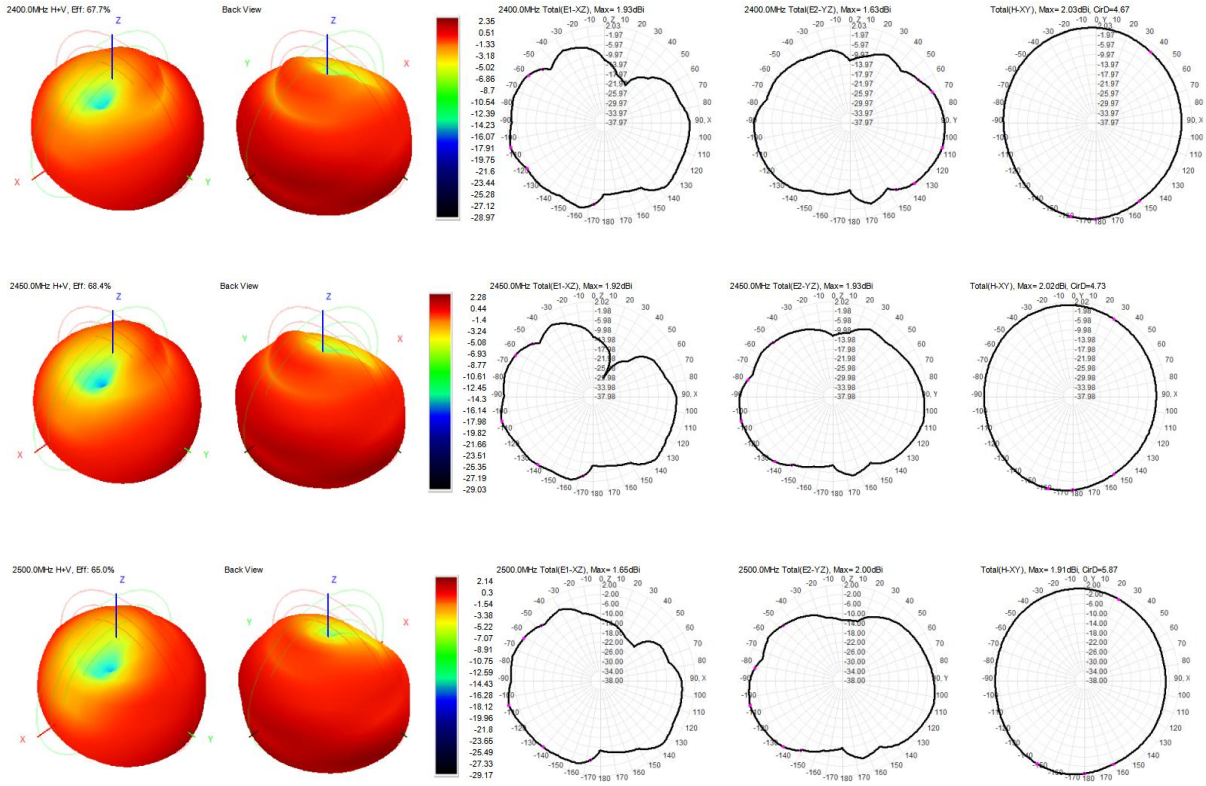

Figure 10 Antenna pattern

Copyright © 2023 Shenzhen Ai-Thinker Technology Co., Ltd All Rights Reserved

7. Design Guidance

7.1. Module application circuit

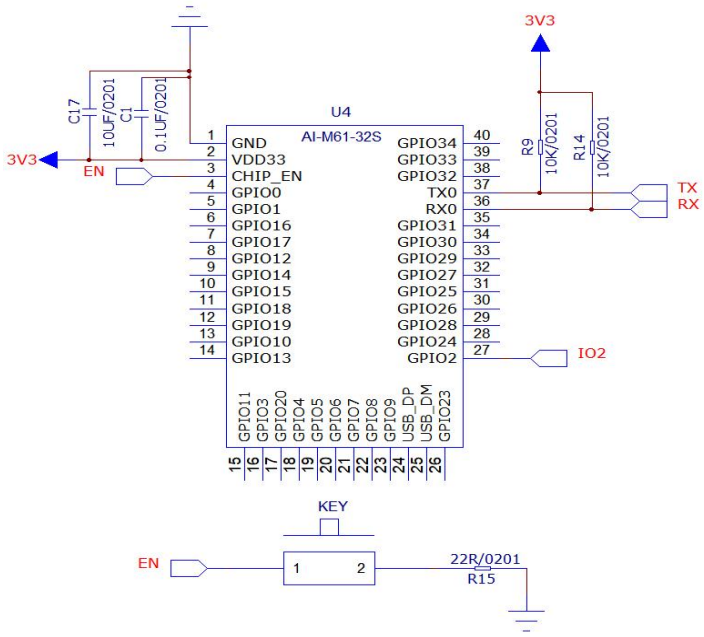

Figure 11 Application circuit diagram

- GPIO2 is the module startup control pin. It is in the normal working mode when it is low level, and it is in the firmware burning mode when it is high level. The default low level inside the chip.
- GPIO2/NC, not available by default.
- GPIO16/GPIO17， available by default. These IO ports are shared with the internal 32.768KHz crystal oscillator pins of the module. If you customize a module with an internal patch 32.768KHz crystal oscillator, the IO will be in NC state.
- GPIO4/GPIO5/GPIO6/GPIO7/GPIO8/GPIO9 are NC by default and cannot be used. This IO port is shared with the module's Flash pin, and cannot be used when the external FLASH is connected.
- GPIO3/GPIO34 is NC by default and cannot be used. If you need to use it, please contact Ai-Thinker.

Copyright © 2023 Shenzhen Ai-Thinker Technology Co., Ltd All Rights Reserved

7.2. Recommended PCB package size

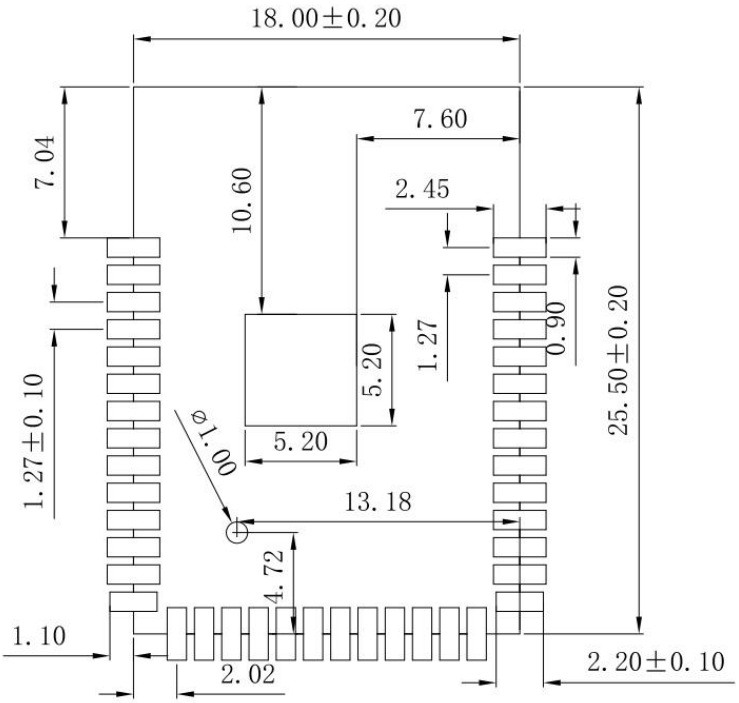

Figure 12 Recommended PCB Package Dimensions

7.3. Antenna layout requirements

- For the installation position on the motherboard, the following two methods are recommended:

Solution 1: Put the module on the edge of the motherboard, and the antenna area extends out of the edge of the motherboard.

Solution 2: Put the module on the edge of the motherboard, and hollow out an area on the edge of the motherboard where the antenna is.

- In order to meet the performance of the on-board antenna, it is forbidden to place metal parts around the antenna and keep away from high-frequency devices.

Copyright © 2023 Shenzhen Ai-Thinker Technology Co., Ltd All Rights Reserved

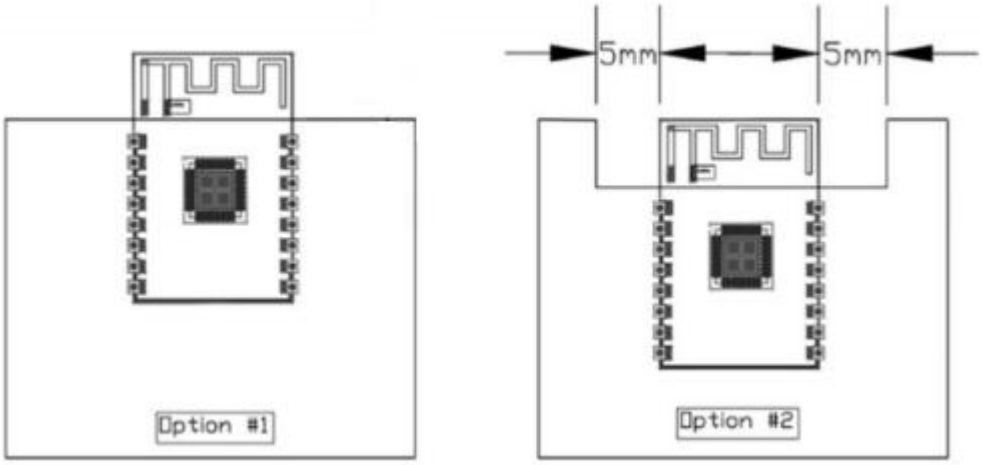

Figure 13 Antenna layout diagram

7.4. Power supply

- Recommended 3.3V voltage, peak current above 500mA.
- It is recommended to use LDO power supply; if using DC-DC, it is recommended to control the ripple within 30mV.
- It is recommended to reserve the position of the dynamic response capacitor for the DC-DC power supply circuit, which can optimize the output ripple when the load changes greatly.
- It is recommended to add an ESD device to the 3.3V power interface.

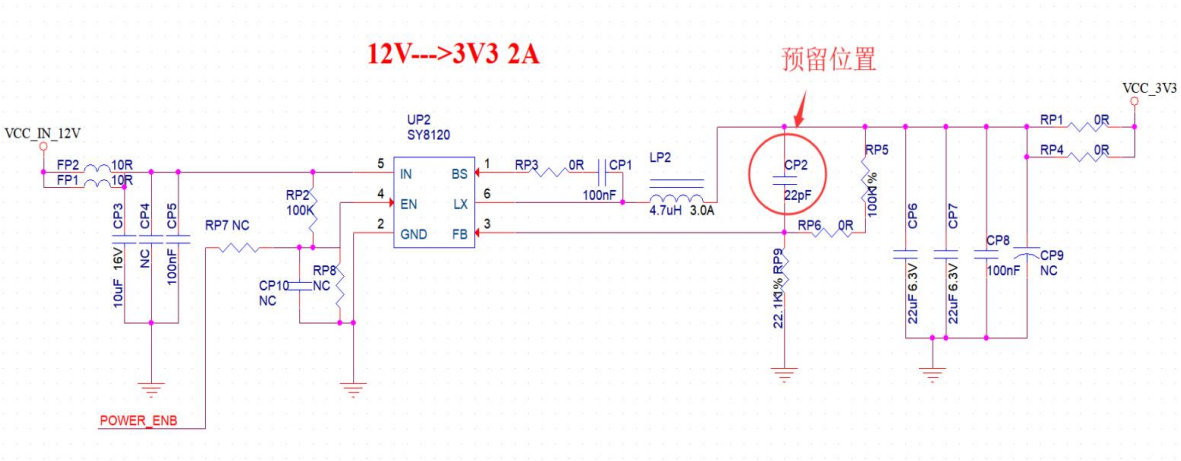

Figure 14 DC-DC step-down circuit diagram

Copyright © 2023 Shenzhen Ai-Thinker Technology Co., Ltd All Rights Reserved

7.5. GPIO

- There are some IO ports on the periphery of the module. If you need to use it, it is recommended to connect a 10-100 ohm resistor in series with the IO ports. This can suppress overshoot and make the levels on both sides more stable. Helpful for both EMI and ESD.
- For the pull-up and pull-down of the special IO port, please refer to the instructions in the specification, which will affect the startup configuration of the module.
- The IO port of the module is 3.3V. If the level of the main control and the IO port of the module do not match, a level conversion circuit needs to be added.
- If the IO port is directly connected to the peripheral interface, or terminals such as pin headers, it is recommended to reserve an ESD device near the IO port wiring near the terminal.

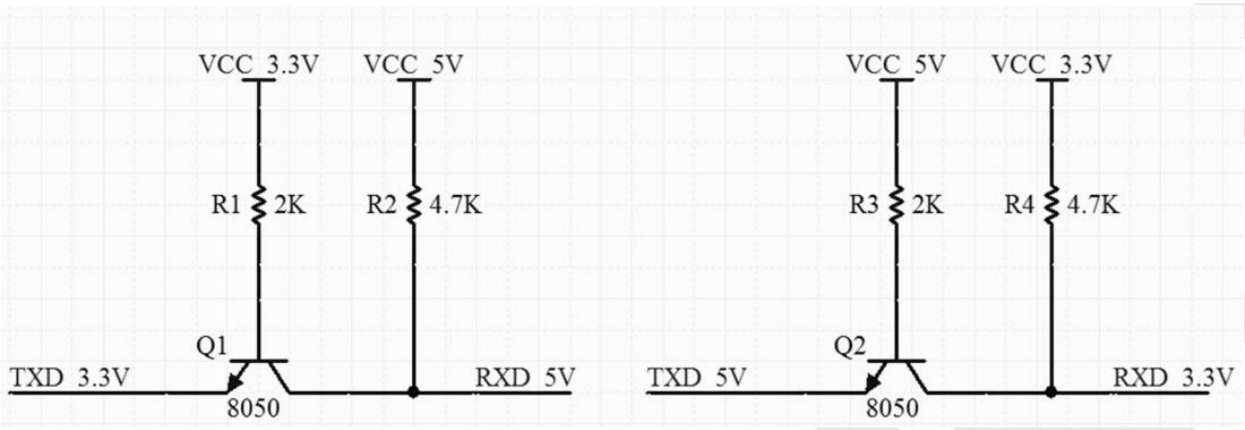

Figure 15 Level convert circuit

Copyright © 2023 Shenzhen Ai-Thinker Technology Co., Ltd All Rights Reserved

8. Storage conditions

Products sealed in moisture-proof bags should be stored in a non-condensing atmosphere at <40°C/90%RH.

The moisture sensitivity level MSL of the module is 3.

After the vacuum bag is unpacked, it must be used within 168 hours at 25±5°C/60%RH, otherwise it needs to be baked before it can be put online again.

9. Reflow welding curve diagram

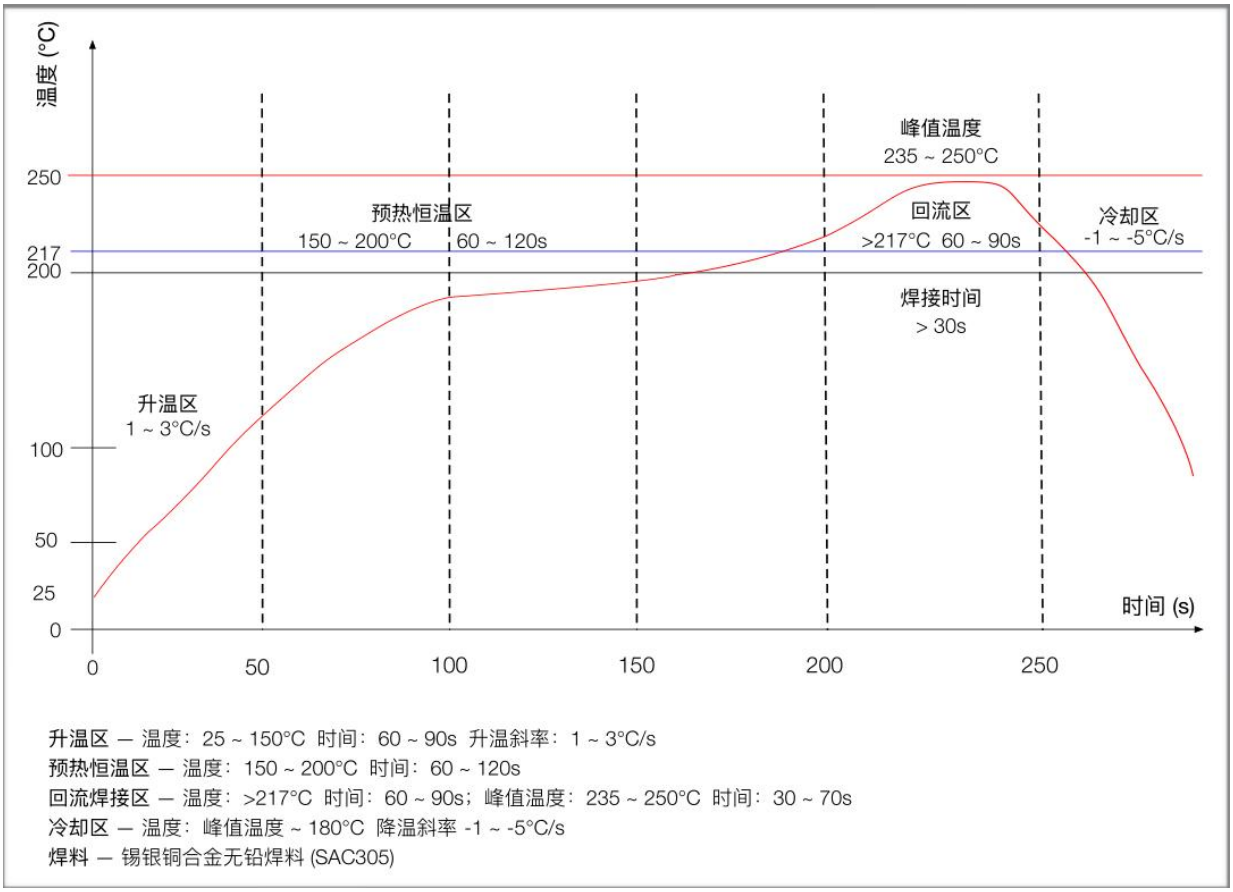

Figure 16 Reflow welding diagram

Copyright © 2023 Shenzhen Ai-Thinker Technology Co., Ltd All Rights Reserved

10.Product Packaging Information

Ai-M61-32S module is packaged in a tape, 800pcs/reel.As shown in the below image:

Figure 17 Package and packing diagram

11.Contact us

Ai-Thinker official website　　Office forum　　Develop DOCS

LinkedIn　　Tmall shop　　Taobao shop　　Alibaba shop

Technical support email：support@aithinker.com

Domestic business cooperation：sales@aithinker.com

Overseas business cooperation：overseas@aithinker.com

Company Address：Room 403,408-410, Block C, Huafeng Smart Innovation Port, Gushu 2nd Road, Xixiang, Baoan District, Shenzhen.

Tel：+86-0755-29162996

WeChat mini program

WeChat official account

Copyright © 2023 Shenzhen Ai-Thinker Technology Co., Ltd All Rights Reserved

Disclaimer and copyright notice

The information in this article,including the URL address for reference,is subject to change without notice.

The document is provided"as is"without any guarantee responsibility,including any guarantee for merchantability,suitability for a specific purpose,or non-infringement,and any guarantee mentioned elsewhere in any proposal,specification or sample.This document does not bear any responsibility,including the responsibility for infringement of any patent rights arising from the use of the information in this document.This document does not grant any license for the use of intellectual property rights in estoppel or other ways,whether express or implied.

The test data obtained in the article are all obtained from Ai-Thinker's laboratory tests,and the actual results may vary slightly.

All brand names,trademarks and registered trademarks mentioned in this article are the property of their respective owners,and it is hereby declared.

The final interpretation right belongs to Shenzhen Ai-Thinker Technology Co.,Ltd.

Notice

Due to product version upgrades or other reasons,the contents of this manual may be changed.

Shenzhen Ai-Thinker Technology Co.,Ltd.reserves the right to modify the contents of this manual without any notice or prompt.

This manual is only used as a guide.Shenzhen Ai-Thinker Technology Co.,Ltd. makes every effort to provide accurate information in this manual.However, Shenzhen Ai-Thinker Technology Co.,Ltd. does not guarantee that the contents of the manual are completely free of errors.All statements and information in this manual And the suggestion does not constitute any express or implied guarantee.

Copyright © 2023 Shenzhen Ai-Thinker Technology Co., Ltd All Rights Reserved

FCC WARNING

FCC Caution: Any changes or modifications not expressly approved by the party responsible for compliance could void the user's authority to operate this equipment.

This device complies with Part 15 of the FCC Rules.

Operation is subject to the following two conditions: (1) This device may not cause harmful interference, and (2) this device must accept any interference received, including interference that may cause undesired operation.

This device and its antenna(s) must not be co-located or operating in conjunction with any other antenna or transmitter.

15.105 Information to the user.

(b) For a Class B digital device or peripheral, the instructions furnished the user shall include the following or similar statement, placed in a prominent location in the text of the manual:

Note: This equipment has been tested and found to comply with the limits for a Class B digital device, pursuant to part 15 of the FCC Rules. These limits are designed to provide reasonable protection against harmful interference in a residential installation. This equipment generates, uses and can radiate radio frequency energy and, if not installed and used in accordance with the instructions, may cause harmful interference to radio communications. However, there is no guarantee that interference will not occur in a particular installation. If this equipment does cause harmful interference to radio or television reception, which can be determined by turning the equipment off and on, the user is encouraged to try to correct the interference by one or more of the following measures:

—Reorient or relocate the receiving antenna.

—Increase the separation between the equipment and receiver.

—Connect the equipment into an outlet on a circuit different from that to which the receiver is connected.

—Consult the dealer or an experienced radio/TV technician for help.

This equipment complies with FCC radiation exposure limits set forth for an uncontrolled environment. This equipment should be installed and operated with minimum distance 20 cm between the radiator and your body.

Radiation Exposure Statement:

This equipment complies with FCC radiation exposure limits set forth for an uncontrolled environment.

This transmitter must not be co-located or operating in conjunction with any other

antenna or transmitter.
The availability of some specific channels and/or operational frequency bands are country dependent and are firmware programmed at the factory to match the intended destination.
The firmware setting is not accessible by the end user.
The final end product must be labelled in a visible area with the following:
“Contains Transmitter Module “FCC ID: 2ATPO-AIM61”

Requirement per KDB996369 D03

2.2 List of applicable FCC rules

List the FCC rules that are applicable to the modular transmitter. These are the rules that specifically establish the bands of operation, the power, spurious emissions, and operating fundamental frequencies. DO NOT list compliance to unintentional-radiator rules (Part 15 Subpart B) since that is not a condition of a module grant that is extended to a host manufacturer. See also Section 2.10 below concerning the need to notify host manufacturers that further testing is required.3

Explanation: This module meets the requirements of FCC part 15C (15.247).it Specifically identified AC Power Line Conducted Emission, Radiated Spurious emissions, Band edge and RF Conducted Spurious Emissions, Conducted Peak Output Power, Bandwidth, Power Spectral Density, Antenna Requirement.

2.3 Summarize the specific operational use conditions

Describe use conditions that are applicable to the modular transmitter, including for example any limits on antennas, etc. For example, if point-to-point antennas are used that require reduction in power or compensation for cable loss, then this information must be in the instructions. If the use condition limitations extend to professional users, then instructions must state that this information also extends to the host manufacturer's instruction manual. In addition, certain information may also be needed, such as peak gain per frequency band and minimum gain, specifically for master devices in 5 GHz DFS bands.

Explanation: The product antenna uses an irreplaceable antenna with a gain of WIFI ANT:2.5dBi ,BT ANT:2.59dBi

2.4 Single Modular

If a modular transmitter is approved as a "Single Modular ," then the module manufacturer isresponsible for approving the host environment that the Single Modular is used with. The manufacturer of a Single Modular must describe, both in the filing and in the installation instructions, the alternative means that the Single Modular manufacturer uses to verify that the host meets the necessary requirements to satisfy the module limiting conditions.

A Single Modular manufacturer has the flexibility to define its alternative method to address the conditions that limit the initial approval, such as: shielding, minimum signaling amplitude, buffered modulation/data inputs, or power supply regulation. The alternative method could include that the limited

module manufacturer reviews detailed test data or host designs prior to giving the host manufacturer approval.

This Single Modular procedure is also applicable for RF exposure evaluation when it is necessary to demonstrate compliance in a specific host. The module manufacturer must state how control of the product into which the modular transmitter will be installed will be maintained such that full compliance of the product is always ensured. For additional hosts other than the specific host originally granted with a limited

module, a Class II permissive change is required on the module grant to register the additional host as a specific host also approved with the module.

Explanation: The module is a single module.

2.5 Trace antenna designs

For a modular transmitter with trace antenna designs, see the guidance in Question 11 of KDB Publication 996369 D02 FAQ – Modules for Micro-Strip Antennas and traces. The integration information shall include for the TCB review the integration instructions for the following aspects: layout of trace design, parts list (BOM), antenna, connectors, and isolation requirements.

a) Information that includes permitted variances (e.g., trace boundary limits, thickness, length, width, shape(s), dielectric constant, and impedance as applicable for each type of antenna); b) Each design shall be considered a different type (e.g., antenna length in multiple(s) of frequency, the wavelength, and antenna shape (traces in phase) can affect antenna gain and must be considered); c) The parameters shall be provided in a manner permitting host manufacturers to design the printed circuit (PC) board layout; d) Appropriate parts by manufacturer and specifications; e) Test procedures for design verification; and f) Production test procedures for ensuring compliance

The module grantee shall provide a notice that any deviation(s) from the defined parameters of the antenna trace, as described by the instructions, require that the host product manufacturer must notify the module grantee that they wish to change the antenna trace design. In this case, a Class II permissive change application is required to be filed by the grantee, or the host manufacturer can take responsibility through the change in FCC ID (new application) procedure followed by a Class II permissive change application

2.6 RF exposure considerations

It is essential for module grantees to clearly and explicitly state the RF exposure conditions that permit a host product manufacturer to use the module. Two types of instructions are required for RF exposure information: (1) to the host product manufacturer, to define the application conditions (mobile, portable – xx cm from a person's body); and (2) additional text needed for the host product manufacturer to provide to end users in their end-product manuals. If RF exposure statements and use conditions are not provided, then the host product manufacturer is required to take responsibility of the module through a change in FCC ID (new application).

Explanation: The module complies with FCC radiofrequency radiation exposure limits for uncontrolled environments. The device is installed and operated with a distance of more than 20 cm between the radiator and your body." This module follows FCC statement design, FCC ID: 2ATPO-AIM61

2.7 Antennas

A list of antennas included in the application for certification must be provided in the instructions. For modular transmitters approved as limited modules, all applicable professional installer instructions must be included as part of the information to the host product manufacturer. The antenna list shall also identify the antenna types (monopole, PIFA, dipole, etc. (note that for example an “omni-directional antenna” is not considered to be a specific “antenna type”).

For situations where the host product manufacturer is responsible for an external connector, for example with an RF pin and antenna trace design, the integration instructions shall inform the installer that unique antenna connector must be used on the Part 15 authorized transmitters used in the host product.

The module manufacturers shall provide a list of acceptable unique connectors.

Explanation: The product antenna uses an irreplaceable antenna with a gain of WIFI ANT:2.5dBi ,BT ANT:2.59dBi

2.8 Label and compliance information

Grantees are responsible for the continued compliance of their modules to the FCC rules. This
includes advising host product manufacturers that they need to provide a physical or e-label stating “Contains FCC ID” with their finished product. See Guidelines for Labeling and User Information for RF Devices – KDB Publication 784748.

Explanation: The host system using this module, should have label in a visible area indicated the following texts: "Contains FCC ID: 2ATPO-AIM61

2.9 Information on test modes and additional testing requirements5

Additional guidance for testing host products is given in KDB Publication 996369 D04 Module Integration Guide. Test modes should take into consideration different operational conditions for a stand-alone modular transmitter in a host, as well as for multiple simultaneously transmitting modules or other transmitters in a host product.

The grantee should provide information on how to configure test modes for host product evaluation for different operational conditions for a stand-alone modular transmitter in a host, versus with multiple, simultaneously transmitting modules or other transmitters in a host.

Grantees can increase the utility of their modular transmitters by providing special means, modes, or instructions that simulates or characterizes a connection by enabling a transmitter. This can greatly simplify a host manufacturer’s determination that a module as installed in a host complies with FCC requirements.

Explanation: Shenzhen Ai-Thinker Technology Co., Ltd can increase the utility of our modular transmitters by providing instructions that simulates or characterizes a connection by enabling a transmitter.

2.10 Additional testing, Part 15 Subpart B disclaimer

The grantee should include a statement that the modular transmitter is only FCC authorized for the specific rule parts (i.e., FCC transmitter rules) listed on the grant, and that the host product manufacturer is responsible for compliance to any other FCC rules that apply to the host not covered by the modular transmitter grant of certification. If the grantee markets their product

as being Part 15
Subpart B compliant (when it also contains unintentional-radiator digital circuity), then the grantee shall provide a notice stating that the final host product still requires Part 15 Subpart B compliance testing with the modular transmitter installed.

Explanation: The module without unintentional-radiator digital circuity, so the module does not require an evaluation by FCC Part 15 Subpart B. The host shoule be evaluated by the FCC Subpart B.