ESP-C3-12F Specification

Version V1.0

Copyright ©2021

Copyright © 2021 Shenzhen Ai-Thinker Technology Co., Ltd All Rights Reserved

Disclaimer and copyright notice

The information in this article, including the URL address for reference, is subject to change without prior notice.

The documentation is provided "as is" without any warranty, including any warranties of merchantability, fitness for a particular purpose, or non-infringement, and any warranties mentioned in the proposal, specification or sample. This document is not responsible for any infringement of any patent rights arising out of the use of the information in this document. No license, express or implied, by estoppel or otherwise, is hereby granted.

The test data obtained in this paper are all obtained by Ai-Thinker laboratory , and the actual results may be slightly different.

The Wi-Fi alliance membership mark is owned by the WiFi alliance.

All trade mark names, trademarks and registered trademarks mentioned herein are the property of their respective owners and are hereby declared.

The final interpretation right is owned by Shenzhen Ai-Thinker Technology Co., Ltd.

Note

The contents of this manual may be changed due to the version upgrade of the product or other reasons. Shenzhen Ai-Thinker Technology Co., Ltd. reserves the right to modify the contents of this manual without any notice. This manual is only used as a guide, and Shenzhen Ai-Thinker Technology Co., Ltd. makes every effort to provide accurate information in this manual, but Shenzhen Ai-Thinker Technology Co., Ltd. does not ensure that the contents of the manual are completely true,, All statements and information in this manual. and the recommendations do not constitute for any warranty, express or implied.

Copyright © 2021 Shenzhen Ai-Thinker Technology Co., Ltd All Rights Reserved

Document development/revision/revocation resume

Vision	Data	Revised content	Edition	Approve
V1.0	2021.02.24	First Edition	Deng Chaomei	Ning Guan

Copyright © 2021 Shenzhen Ai-Thinker Technology Co., Ltd All Rights Reserved

CONTENT

1 Product Overview 5
1.1. Characteristics 6
1.2. Main parameters 7
2 Electrical parameters 8
2.1. Electrical characteristics 8
2.2. WIFI RF performance 8
2.3. BLE RF performance 9
2.4. Power consumption 9
3 Appearance dimensions 11
4 Pin definition 13
5 Schematic diagrams 15
6 Design guidance 16
6.1. Note： 16
6.2. Antenna layout requirements 16
6.4. GPIO Interface 17
7 Reflow soldering 18
8 Packaging information 19
9 Contact us 19

Copyright © 2021 Shenzhen Ai-Thinker Technology Co., Ltd All Rights Reserved

1 Product Overview

ESP-C3-12F is a Wi-Fi module developed by Ai-Thinker. This module core processor ESP32-C3 is a Wi-Fi+ BLE combination of system-level chips (SoC), designed for various applications such as internet of things (IoT), mobile devices, wearable electronics, smart home, etc.

ESP32-C3 with industry-leading low power and RF performance, supporting Wi-Fi IEEE802.11b/g/n agreements and BLE 5.0. ESP32-C3 chip is equipped with 32-bit RISC-V single-core processor, operating frequency up to 160 MHz. The chip is support to have secondary development without using other microcontrollers or processors. The chip has a built-in 400 KB SRAM，384 KB ROM，8KB RTC SRAM.Also, the chip support external Flash while it built-in 4Mbit Flash. ESP32-C3 chip supports a variety of low-power consumption working states, which can meet the power consumption requirements of various application scenarios. The chip's unique features such as fine clock gating function, dynamic voltage clock frequency adjustment function, and RF output power adjustable function can achieve the best balance between communication distance, communication speed and power consumption.

ESP-C3-12F provides a wealth of peripheral interfaces, including UART，PWM，SPI，I2S，I2C， ADC， temperature sensor and there are 15 GPIOs.

ESP-C3-12F has a variety of unique hardware safety mechanisms.The hardware encryption accelerator supports AES、SHA and RSA algorithm. Among them, RNG, HMAC and Digital Signature modules provide more security features. Other security features include flash encryption and se-cure boot signature verification, etc. The perfect security mechanism enables the chip to be perfectly applied to various encryption products.

ESP-C3-12F module supports low-power Bluetooth： Bluetooth5 and Bluetooth mesh.

Bluetooth rate support: 125Kbps, 500Kbps, 1Mbps, 2Mbps. Support broadcast extension, multi-broadcasting, channel selection.

Copyright © 2021 Shenzhen Ai-Thinker Technology Co., Ltd All Rights Reserved

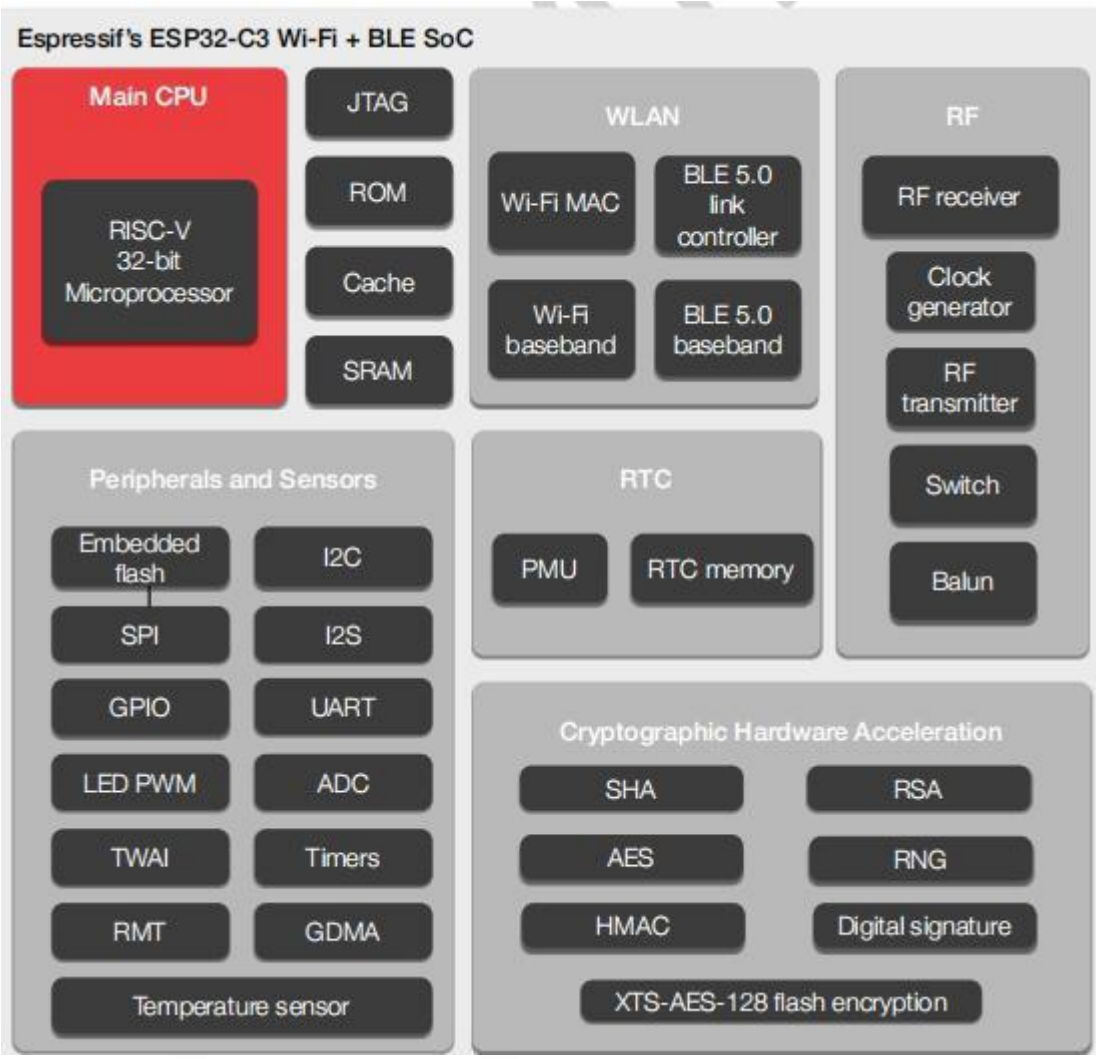

1.1. Characteristics

- Complete Wi-Fi 802.11b/g/n，1T1R mode data rate up to 150Mbps
- Support BLE5.0 and rate support： 125Kbps， 500Kbps， 1Mbps,2Mbps
- 32-bit RISC-V single-core processor, supports a clock frequency of up to 160 MHz, with 400 KB SRAM，384 KB ROM，8KB RTC SRAM
- Support UART/PWM/GPIO/ADC/I2C/I2S interface, temperature sensor, pulse counter
- SMD-22 package
- Support multiple sleep modes, deep sleep electric current is less than 5uA

Copyright © 2021 Shenzhen Ai-Thinker Technology Co., Ltd All Rights Reserved

- UART rate up to 5Mbps
- Support STA/AP/STA+AP mode and mix mode
- Support Smart Config (APP)/AirKiss (WeChat) of Android and IOS One-click network configuration
- Support UART port local upgrade and remote firmware upgrade (FOTA)
- General AT commands can be better understand
- Support secondary development, integrated Linux development environment
- About Flash configuration

  Acquiesce in using the built-in 4MByte Flash.

1.2. Main parameters

Table 1 main parameter descriptions

Model Name	ESP-C3-12F
Package	SMD-22
Size	24.0*16.0*3.1(±0.2)mm
Antenna	On-board PCB antenna/IPEX
Frequency Range	2400 ~ 2483.5MHz
Operating Temperature	-40 ℃ ~ 85 ℃
Store Temperature	-40 ℃ ~ 125 ℃ , < 90%RH
Power supply range	Voltage 3.0V ~ 3.6V， Electrical current >500mA
Support Interface	UART/GPIO/ADC/PWM/I2C/I2S
IO	IO0,IO1,IO2,IO3,IO4,IO5,IO6,IO7,IO8,IO9,IO10,IO18,IO19， IO20,IO21
UART Rate	Support 110 ~ 4608000 bps， default 115200 bps
Bluetooth	BLE 5.0

Copyright © 2021 Shenzhen Ai-Thinker Technology Co., Ltd All Rights Reserved

Security	WEP/WPA-PSK/WPA2-PSK
SPI Flash	Default allocation 4MByte，support 2MByte version

2 Electrical parameters

ESP-C3-12F module is electrostatic sensitive devices and special precautions need to be taken when handling

2.1. Electrical characteristics

Parameters		Conditions	Min	Typical values	Max	Unit
Supply voltage		VDD	3.0	3.3	3.6	V
I/O	V_{IL}/V_{IH}	-	-0.3/0.75VDD	-	0.25VDD/VDD+0.3	V
	V_{OL}/V_{OH}	-	N/0.8VIO	-	0.1VIO/N	V
	I_{MAX}	-	-	-	12	mA

2.2. WIFI RF performance

Description	Typical values	Unit
Operating frequency	2400 - 2483.5	MHz
Output power		
11n mode HT40，PA output power	13±2	dBm
11n mode HT20，PA output power	13±2	dBm

Copyright © 2021 Shenzhen Ai-Thinker Technology Co., Ltd All Rights Reserved

11g mode，PA output power	13±2	dBm
11b mode，PA output power	13±2	dBm
Receiving sensitivity		
CCK, 1 Mbps	-96±2	dBm
CCK, 11 Mbps	-88±2	dBm
6 Mbps (1/2 BPSK)	-92±2	dBm
54 Mbps (3/4 64-QAM)	-75±2	dBm
HT20 (MCS7)	-73±2	dBm
HT40 (MCS7)	-70±2	dBm

2.3. BLE RF performance

Description	Typical values	unit
Output power		
Transmit power	-3±2	dBm
Receiving sensitivity Low Energy consumption BLE: **1M**		
Sensitivity@30.8%PER	-96±2	dBm

2.4. Power consumption

The following power consumption data are based on a 3.3 V power supply, 25 ℃ ambient temperature and measured using an internal voltage regulator.

- All measurements were completed at the antenna interface without SAW filters
- All emission data are based on a duty cycle of 100%, measured in the mode of continuous emission.

Mode	Mix	Typical values	Max	Unit
Tx 802.11b, CCK 1Mbps, POUT=+20dBm	-	345	-	mA
Tx 802.11g, OFDM 54Mbps, POUT =+18dBm	-	285	-	mA

Copyright © 2021 Shenzhen Ai-Thinker Technology Co., Ltd All Rights Reserved

Tx 802.11n, MCS7, POUT =+17dBm	-	280	-	mA
Rx 802.11b,1024 bit	-	82	-	mA
Rx 802.11g,1024 bit	-	82	-	mA
Rx 802.11n,1024 bit	-	84	-	mA
Modem-Sleep①	-	20	-	mA
Light-Sleep②	-	130	-	μA
Deep-Sleep③	-	5	-	μA
Power Off	-	1	-	μA

Copyright © 2021 Shenzhen Ai-Thinker Technology Co., Ltd All Rights Reserved

3 Appearance dimensions

ESP-C3-12F have two FLASH， including external FLASH and build-in FLASH

(The rendering is for reference only, the actual product shall prevail)

External2MByte FLASH:

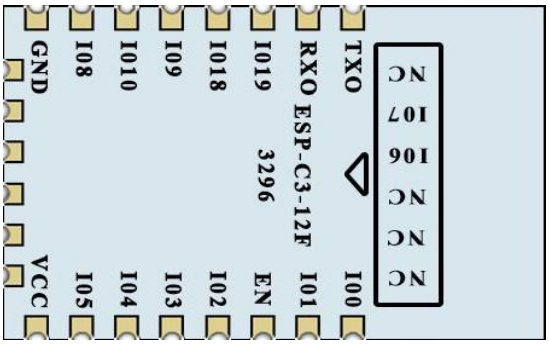

Build-in 4MByte FLASH:

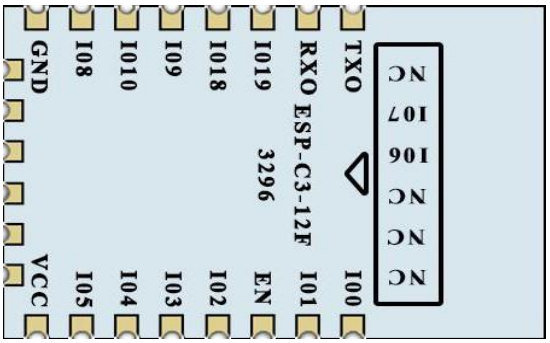

Copyright © 2021 Shenzhen Ai-Thinker Technology Co., Ltd All Rights Reserved

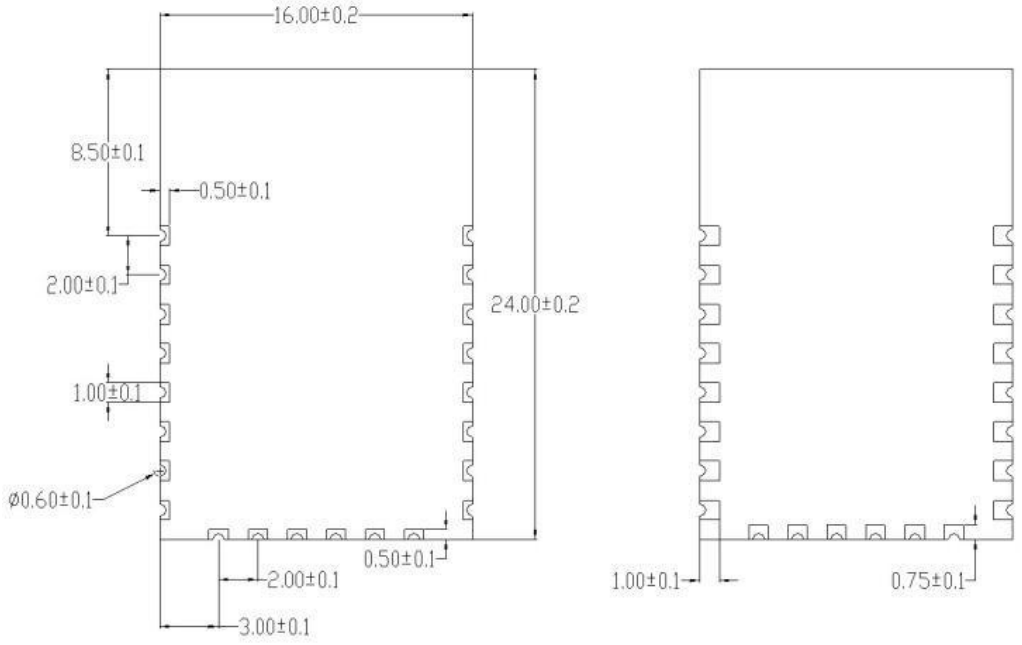

正面　　背面

Copyright © 2021 Shenzhen Ai-Thinker Technology Co., Ltd All Rights Reserved

4 Pin definition

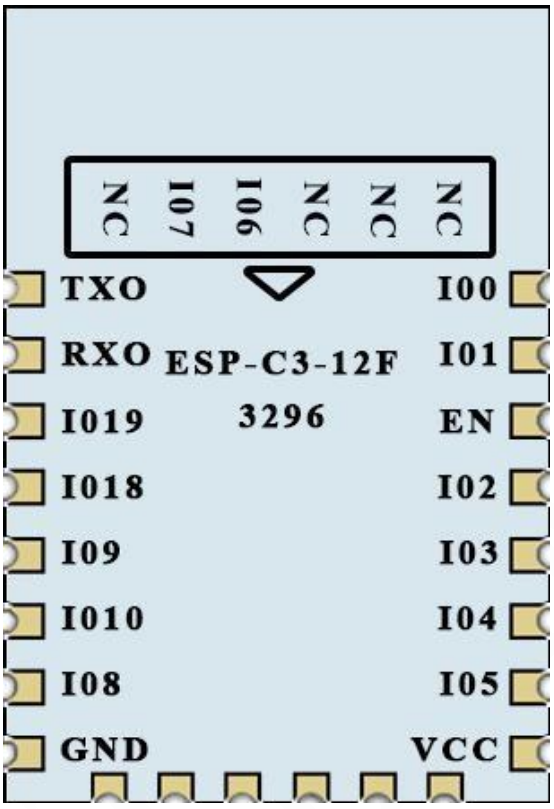

ESP-C3-12F Diagram of Pin

ESP-C3-12F module is connected to 22 interfaces, refer to pin diagram, pin function definition table is interface definition.

Table ESP-C3-12F Pin function definition

No.	Name	Function
1	IO0	GPIO0,ADC1_CH0,XTAL_32K_N
2	IO1	GPIO1,ADC1_CH1,XTAL_32K_N
3	EN	High level: chip enabled; Low level: chip shutdown; Pay attention not to leave the CHIP_PU pin floating;
4	IO2	GPIO2,ADC1_CH2,FSPIQ
5	IO3	GPIO03,ADC1_CH3
6	IO4	GPIO04,ADC1_CH4,FSPIHD,MTMS
7	IO5	GPIO05,ADC2_CH0,FSPIWP,MTDI

Copyright © 2021 Shenzhen Ai-Thinker Technology Co., Ltd All Rights Reserved

8	VCC	VCC
9	NC	NC
10	NC	NC
11	NC	NC
12	IO6	GPIO6,FSPICLK,MTCK
13	IO7	GPIO7,FSPID,MTDO
14	NC	NC
15	GND	GND
16	IO8	GPIO8
17	IO10	GPIO10,FSPICSO
18	IO9	GPIO9
19	IO19	GPIO19
20	IO18	GPIO18
21	RX	UART0_RX,GPIO20
22	TX	UART0_TX,GPIO21

Table Module Start-up Mode Description

System start-up mode			
Pin	Default	SPI Start up mode	Download Start up Mode
IO8	non	/	1
IO9	Pull up	1	0

Note: Some pins have been internally pulled up, please refer to the schematic

Copyright © 2021 Shenzhen Ai-Thinker Technology Co., Ltd All Rights Reserved

5 Schematic diagrams

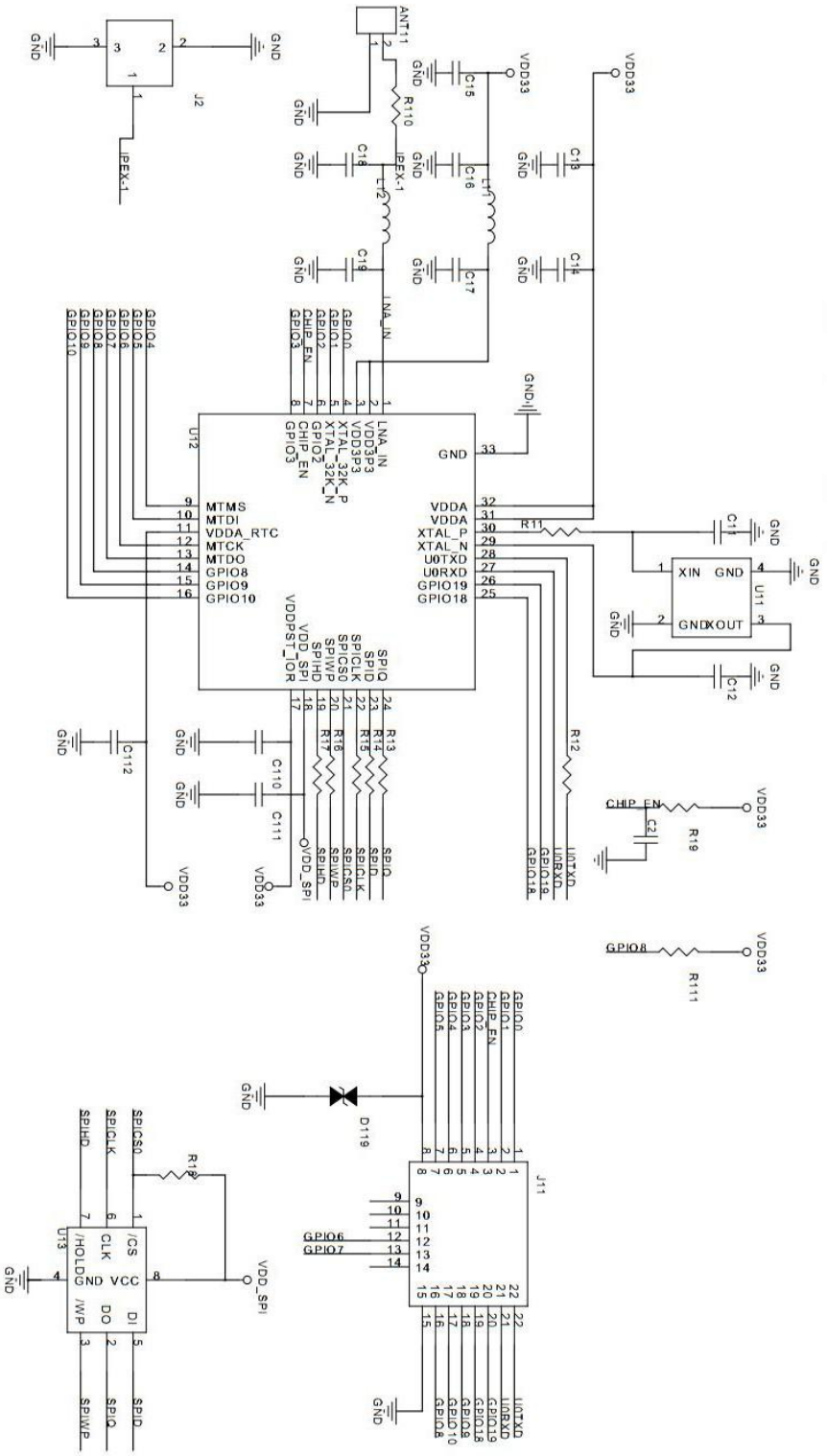

Copyright © 2021 Shenzhen Ai-Thinker Technology Co., Ltd All Rights Reserved

6 Design guidance

6.1. Note：

（1）When GPIO20 is used as U1RXD, a pull-up resistor needs to be added externally.

6.2. Antenna layout requirements

（1） For the installation position on the motherboard, the following two methods are recommended：

Solution 1: Put the module on the edge of the main board, and the antenna area extends out of the edge of the main board.

Solution 2: Put the module on the edge of the main board, and hollow out an area at the antenna position on the edge of the main board.

（2） In order to meet the performance of the on-board antenna, metal parts are forbidden to be placed around the antenna, away from high frequency devices.

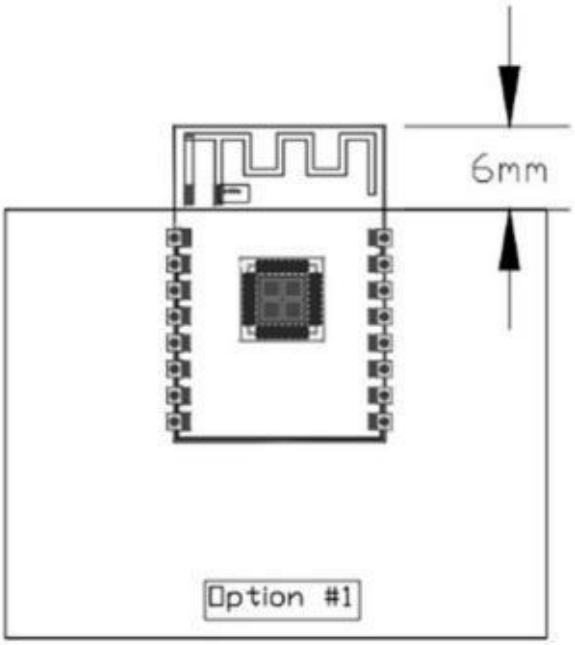

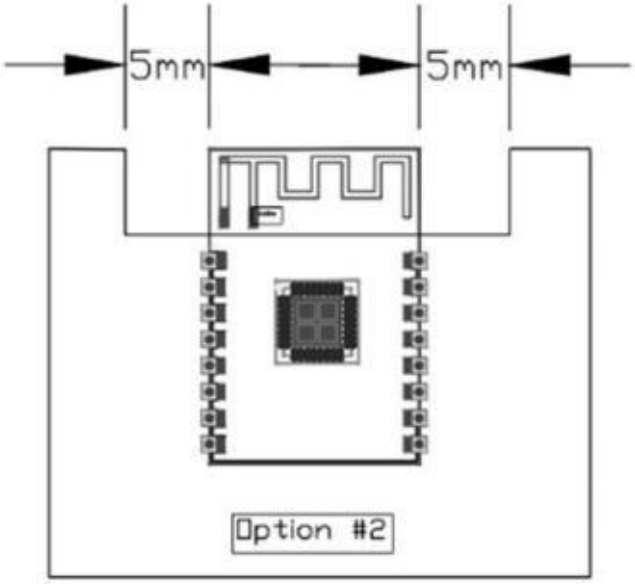

6.3. Power supply

(1) Recommend 3.3V voltage, peak current above 500mA

(2) It is recommended to use LDO for power supply; if DC-DC is used, the ripple is recommended to be controlled within 30mV.

(3) DC-DC the power supply circuit, it is suggested to reserve the position of output ripple can be optimized when the load changes greatly.

(4) It is recommended to add ESD devices to the 3.3V power interface.

Copyright © 2021 Shenzhen Ai-Thinker Technology Co., Ltd All Rights Reserved

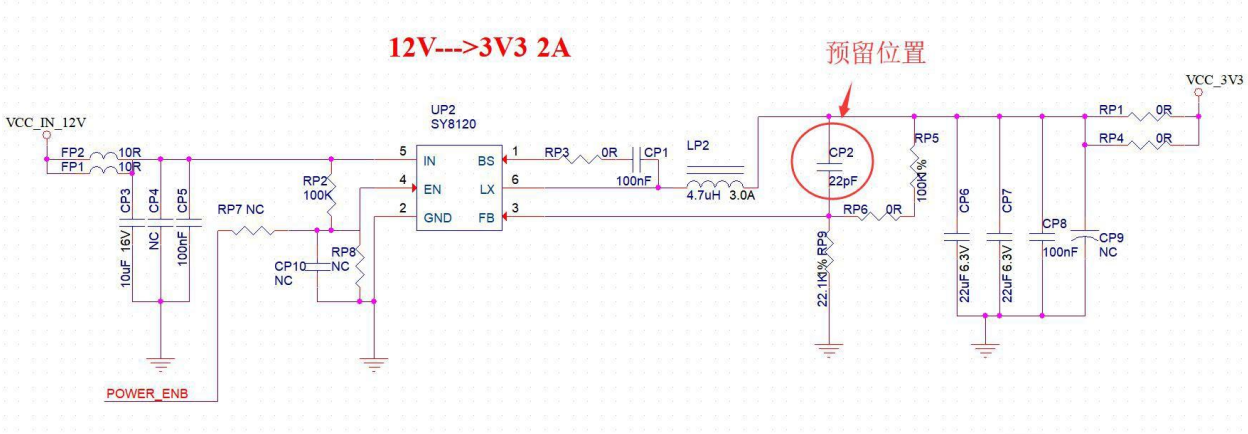

6.4. GPIO Interface

(1) The module periphery leads to some GPIO ports, such as the recommended resistance of 10-100 Ohms in series on the IO port. This can suppress overshoot, to ensure both sides of the level more stable. helpful for both EMI and ESD.

(2) For special IO, please refer to the specification, which will affect the starting configuration of the module.

(3) The IO port of the module voltage is 3.3 V, if the main control does not match the IO level of the module, require to add the level conversion circuit.

(4) When the IO port is connected directly to the peripheral interface, or the pin header and other terminals, it is recommended to reserve ESD device near the terminal.

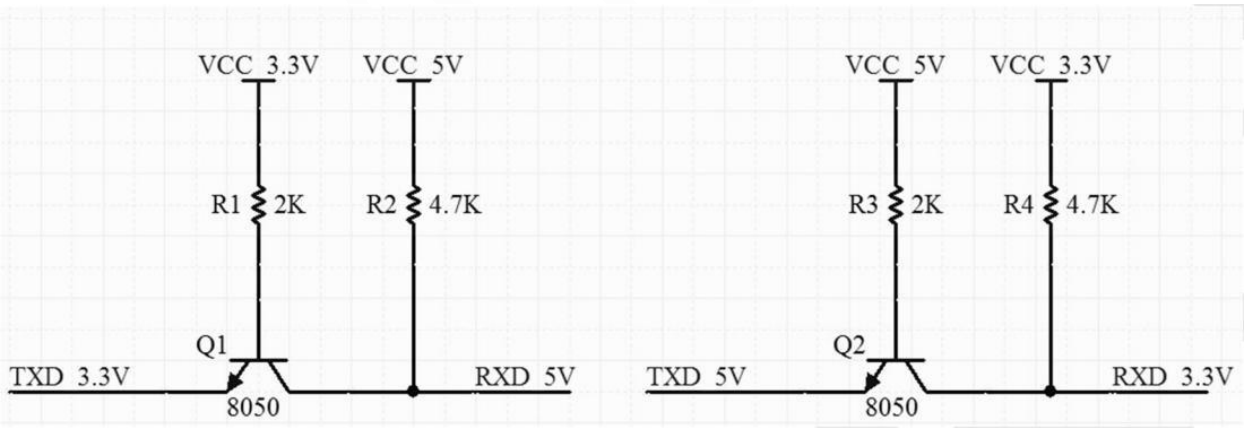

Table Electrical level conversion circuit

Copyright © 2021 Shenzhen Ai-Thinker Technology Co., Ltd All Rights Reserved

7 Reflow soldering

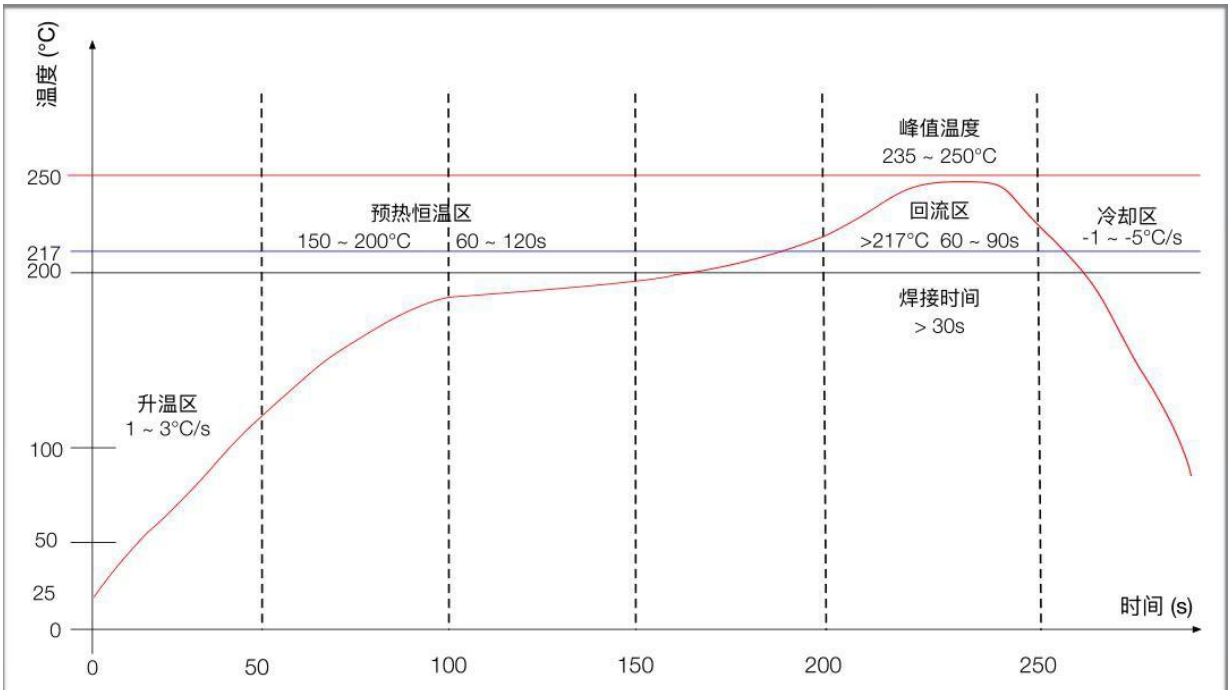

升温区 — 温度：25 ~ 150°C 时间：60 ~ 90s 升温斜率：1 ~ 3°C/s
预热恒温区 — 温度：150 ~ 200°C 时间：60 ~ 120s
回流焊接区 — 温度：>217°C 时间：60 ~ 90s；峰值温度：235 ~ 250°C 时间：30 ~ 70s
冷却区 — 温度：峰值温度 ~ 180°C 降温斜率 -1 ~ -5°C/s
焊料 — 锡银铜合金无铅焊料 (SAC305)

Copyright © 2021 Shenzhen Ai-Thinker Technology Co., Ltd All Rights Reserved

Integration instructions for host product manufacturers according to KDB 996369 D03 OEM Manual v01

2.2 List of applicable FCC rules

The ESP-C3-12F is an Wi-Fi & BT Module with digitally modulated systems using an GFSK,DSSS,OFD technology; modulation. It operates on the 2400-2483.5MHz band and, therefore, is within U.S. FCC part 15.247 standard

2.3 Specific operational use conditions

The EUT is a Wi-Fi & BT Module

Operation Frequency: BT:2402MHz~2480MHz, WIFI:2412MHz~2462MHz

Modulation Type: BT:GFSK,

WIFI: DSSS with DBPSK/DQPSK/CCK for 802.11b;

OFDM with BPSK/QPSK/16QAM/64QAM for 802.11g/n;

Number Of Channel: BT:40

WIFI: 11 channels for 802.11b/g/11n(HT20); 7 channels for 802.11n(HT40);

Antenna Designation: ESP-C3-12F/ ESP-C3-32S/ ESP-C3-13/ ESP-C3-01M Type of antenna is PCB Antenna, ESP-C3-13U Type of antenna is FPCB Antenna

Antenna Gain: 2.0dBi

ESP-C3-12F is a Wi-Fi & BT Module developed by Ai-Thinker Technology. This module core processor ESP32-C3 is a Wi-Fi+ BLE combination of system-level chips (SoC), designed for various applications such as internet of things (IoT), mobile devices, wearable electronics, smart home, etc.

ESP32-C3 with industry-leading low power and RF performance, supporting Wi-Fi IEEE802.11b/g/n agreements and BLE 5.0. ESP32-C3 chip is equipped with 32-bit RISC-V single-core processor, operating frequency up to 160 MHz.

2.4 Limited module procedures

not applicable; Single Modular Approval Request

2.5 Trace antenna designs

Not applicable;

2.6 RF exposure considerations

To maintain compliance with FCC's RF Exposure guidelines, This equipment should be installed and operated with minimum distance between 20cm the radiator your body: Use only the supplied antenna.

2.7 Antennas

The ESP-C3-12F is an Wi-Fi & BT Module beams signals and communicates with its antenna, which is only the antenna equipped with the package are allowed. Antenna. The PCB Antenna gain is 2.0dBi. Antenna could not be in no-load state when module is

working. During debugging, it is suggested to add 50 ohms load to the antenna port to avoid damage or performance degradation of the module under long-time no-load condition.

2.8 Label and compliance information

The final end product must be label in a visible area with the following

Host must Contains FCC ID: 2ATPO-ESP-C3-X. If the size of the end product is larger than 8x10cm, then the following FCC part 15.19 statement has to also be available on the label: This device complies with Part 15 of FCC rules. Operation is subject to the following two conditions:

(1) this device may not cause harmful interference and

(2) this device must accept any interference received, including interference that may cause undesired operation.

2.9 Information on test modes and additional testing requirements

Data transfer module demo board can control the EUT work in RF test mode at specified test channel.

2.10 Additional testing, Part 15 Subpart B disclaimer

The module without unintentional-radiator digital circuit, so the module does not required an evaluation by FCC Part 15 Subpart B. The host should be evaluated by the FCC Subpart B.

ATTENTION

This device is intended only for OEM integrators under the following conditions:

1) The antenna must be installed such that 20 cm is maintained between the antenna and users, and

2) This device and its antenna(s) must not be co‐located with any other transmitters except in accordance with FCC multi‐transmitter product procedures. Referring to the multi‐transmitter policy, multiple transmitter(s) and module(s) can be operated simultaneously without C2P.

3) For all products market in US, OEM has to limit the Operating Frequency: BT:2402MHz~2480MHz, WIFI:2412MHz~2462MHz by supplied firmware programming tool. OEM shall not supply any tool or info to the end‐user regarding to Regulatory Domain change.

USERS MANUAL OF THE END PRODUCT:

In the user manual of the end product, the end user has to be informed to keep at least 20cm separation with the antenna while this end product is installed and operated. The end user has to be informed that the FCC radio‐frequency exposure guidelines for an uncontrolled environment can be satisfied. The end user has to also be informed that any changes or modifications not expressly approved by the manufacturer could void the user's authority to operate this equipment.

If the size of the end product is smaller than 8x10cm, then additional FCC part 15.19 statement is required to be available in the users manual: This device complies with Part 15 of FCC rules. Operation is subject to the following two conditions:

(1) this device may not cause harmful interference and

(2) this device must accept any interference received, including interference that may cause undesired operation.

FCC WARNING

This device complies with part 15 of the FCC Rules. Operation is subject to the following two conditions:

Any changes or modifications not expressly approved by the party responsible for compliance could void the user's authority to operate the equipment.

NOTE: This equipment has been tested and found to comply with the limits for a Class B digital device, pursuant to Part 15 of the FCC Rules. These limits are designed to provide reasonable protection against harmful interference in a residential installation. This equipment generate, uses and can radiate radio frequency energy and, if not installed and used in accordance with the instructions, may cause harmful interference to radio communications. However, there is no guarantee that interference will not occur in a particular installation.

If this equipment does cause harmful interference to radio or television reception, which can be determined by turning the equipment off and on, the user is encouraged to try to correct the interference by one or more of the following measures:

-- Reorient or relocate the receiving antenna.

-- Increase the separation between the equipment and receiver.

-- Connect the equipment into an outlet on a circuit different from that to which the receiver is connected.

-- Consult the dealer or an experienced radio/TV technician for help.

8 Packaging information

Refer to below image,ESP-C3-12F package is in Tape/Reel.

9 Contact us

Official website：https://www.ai-thinker.com

Development DOCS ： https://docs.ai-thinker.com

Official Forum：http://bbs.ai-thinker.com

Sample purchase：https://ai-thinker.en.alibaba.com/

Business cooperation：overseas@aithinker.com

Technical support：support@aithinker.com

Company Address：Room 403,408-410, Block C, Huafeng Smart Innovation Port, Gushu 2nd Road, Xixiang, Baoan District, Shenzhen.

Tel ： 0755-29162996

Copyright © 2021 Shenzhen Ai-Thinker Technology Co., Ltd All Rights Reserved