Ra-07H Datasheet

Version V1.0

Copyright ©2019

Copyright © 2019 Shenzhen Ai-Thinker Technology Co., Ltd All Rights Reserved

Disclaimer and copyright notice

The information in this article, including the URL address for reference, is subject to change without prior notice.The Documentation is provided "as is" without any warranty, including any warranties of merchantability, fitness for a particular purpose, or non-infringement, and any warranties mentioned in the proposal, specification or sample. This document is not responsible for any infringement of any patent rights arising out of the use of the information in this document. No license, express or implied, by estoppel or otherwise, is hereby granted.

The test data obtained in this paper are all obtained by Ai-Thinker laboratory , and the actual results may be slightly different.The Wi-Fi alliance membership mark is owned by the WiFi alliance.

All trade mark names, trademarks and registered trademarks mentioned herein are the property of their respective owners and are hereby declared.
The final interpretation right is owned by Shenzhen Ai-Thinker Technology Co., Ltd.

Note
The contents of this manual may be changed due to the version upgrade of the product or other reasons. Shenzhen Ai-Thinker Technology Co., Ltd. reserves the right to modify the contents of this manual without any notice. This manual is only used as a guide, and Shenzhen Ai-Thinker Technology Co., Ltd. makes every effort to provide accurate information in this manual, but Shenzhen Ai-Thinker Technology Co., Ltd. does not ensure that the contents of the manual are completely true, all statements in this manual, All statements and information in this manual. and the recommendations do not constitute for any warranty, express or implied.

Copyright © 2019 Shenzhen Ai-Thinker Technology Co., Ltd All Rights Reserved

Change History of Revision

Version	Date	Contents of Revision Change	Compilation	Verify
V1.0	2019.12.28	Initial release	Xie Yiji	

Copyright © 2019 Shenzhen Ai-Thinker Technology Co., Ltd All Rights Reserved

Contents

1. Product overview..... 5
2. Electrical parameter..... 7
3. Appearance size..... 9
4. Pin definition..... 10
5. Schematics..... 12
6. Design Guidance..... 12
7. Reflow Welding Curve..... 15
8. Package Information..... 16
9. Contact us..... 16

Copyright © 2019 Shenzhen Ai-Thinker Technology Co., Ltd All Rights Reserved

1. Product overview

The Ra-07H LoRaWAN module feature the Lora long range modem that provides ultra-long range communication , Ultra low power and high interference immunity whilst minimising current consumptio. The ASR6501 chip Integrated LoRa radio transceiver, LoRa modem and 32-bit RISC MCU. The MCU uses ARM Cortex M0 + core and operates at 48MHz. The working frequency range of ASR6501 can support continuous coverage of 150MHz ~ 960MHz; support LoRa modulation mode and (G) FSK modulation mode.

The ASR6501 supports ultra-high sensitivity and a maximum transmit power of + 21dBm. It is suitable for long-distance LPWAN communication and has high transmission efficiency.

Features

- With strong anti-interference ability, can work normally in complex interference environment
- Minimum receiving sensitivity：-137dBm （SF=12/BW=125KHz）
- Operate frequency：903MHz~927MHz（Default）
- The voltage of power supply input：3.3V
- Transmit current：107mA （Full load power consumption）
- Receive current：6mA
- Sleep current：3uA

Copyright © 2019 Shenzhen Ai-Thinker Technology Co., Ltd All Rights Reserved

Parameters

Figure 1 Main Parameter

Model	Ra-07H
Size	16*16*3±0.2mm
Package	SMD18
Antenna	Stamp hole pad / IPEX terminal
Frequency Range	903MHz~927MHz (default)
Receive sensitivity	-136dBm±1
Interface	UART/GPIO/PWM/SWD/ADC/I2C
Operating temperature	-40℃ ~ 85 ℃
Storage environment	-40 ℃ ~ 125 ℃ , < 90%RH
Power supply range	Power supply voltage 3.3V
Power consumption	Sleep mode: 3uA
	Standby mode: 6mA
	Full load mode (TX: 21dBm) : 107mA

Copyright © 2019 Shenzhen Ai-Thinker Technology Co., Ltd All Rights Reserved

2. Electrical parameter

Electrical Characteristics

The Absolute Maximum Rating

Any following absolute maximum ratings exceeding may cause chip damage

Name	Min	Typ	Max	Unit
Supply voltage	2.7	3.3	3.6	V
Operating temperature	-40	-	+85	℃
Storage temperature	-40	-	+125	℃

Power consumption

Mode	Typ	Unit
Transmit power consumption (21dBm)	107	mA
Standby power consumption	6	mA
Sleep	3	uA

Copyright © 2019 Shenzhen Ai-Thinker Technology Co., Ltd All Rights Reserved

RF parameters

Transmit power

Name	Min	Typ	Max	Unit
Average power（927MHz）	19	20	21	dBm
Average power（903MHz）	19	20	21	dBm

Receive sensitivity

Name	Min	Typ	Max	Unit
Receive sensitivity	-137	-136	-135	dBm

Copyright © 2019 Shenzhen Ai-Thinker Technology Co., Ltd All Rights Reserved

3. Appearance size

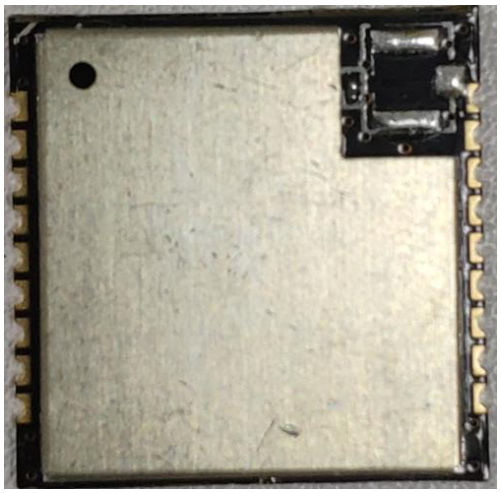

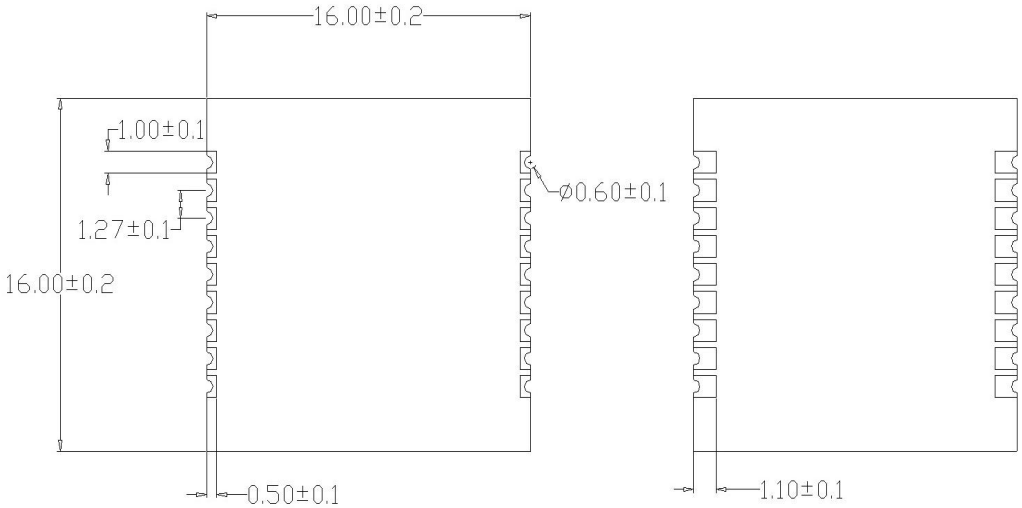

正面　　背面

Copyright © 2019 Shenzhen Ai-Thinker Technology Co., Ltd All Rights Reserved

4. Pin definition

Ra-07H has 18 interfaces，Refer to figure，table is definition of interfaces.

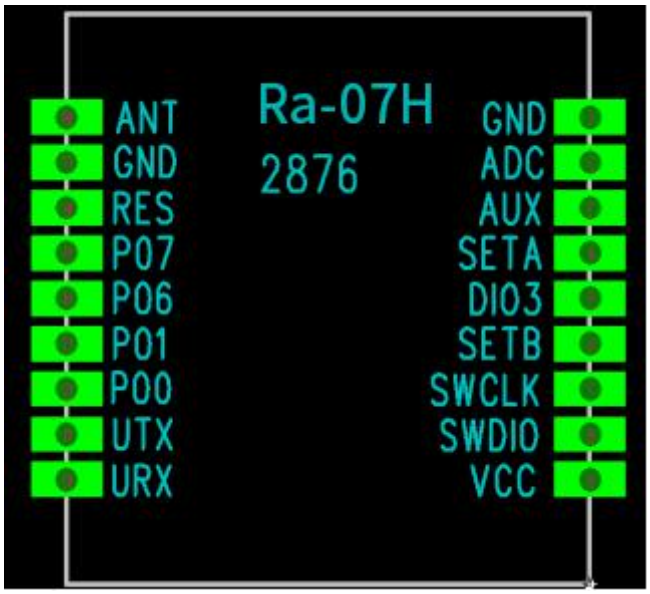

Figure Ra-07H Pin diagram

Table Pin function definition

No.	Name	Function
1	GND	Ground
2	ADC	ADC input pin
3	AUX	MCU GPIO
4	SETA	MCU GPIO
5	DIO3	Multipurpose digital I/O-external TCXO32M supply voltage, cannot be external GPIO
6	SETB	MCU GPIO
7	SWCLK	SWD Clock pin
8	SWDIO	SWD Data pin
9	VCC	Power supply
10	URX	UART RX pin
11	UTX	UART TX pin
12	P00	GPIO pin

Copyright © 2019 Shenzhen Ai-Thinker Technology Co., Ltd All Rights Reserved

13	P01	GPIO pin
14	P06	GPIO pin
15	P07	GPIO pin
16	RES	Reset pin
17	GND	Ground
18	ANT	Antenna

Copyright © 2019 Shenzhen Ai-Thinker Technology Co., Ltd All Rights Reserved

5. Schematics

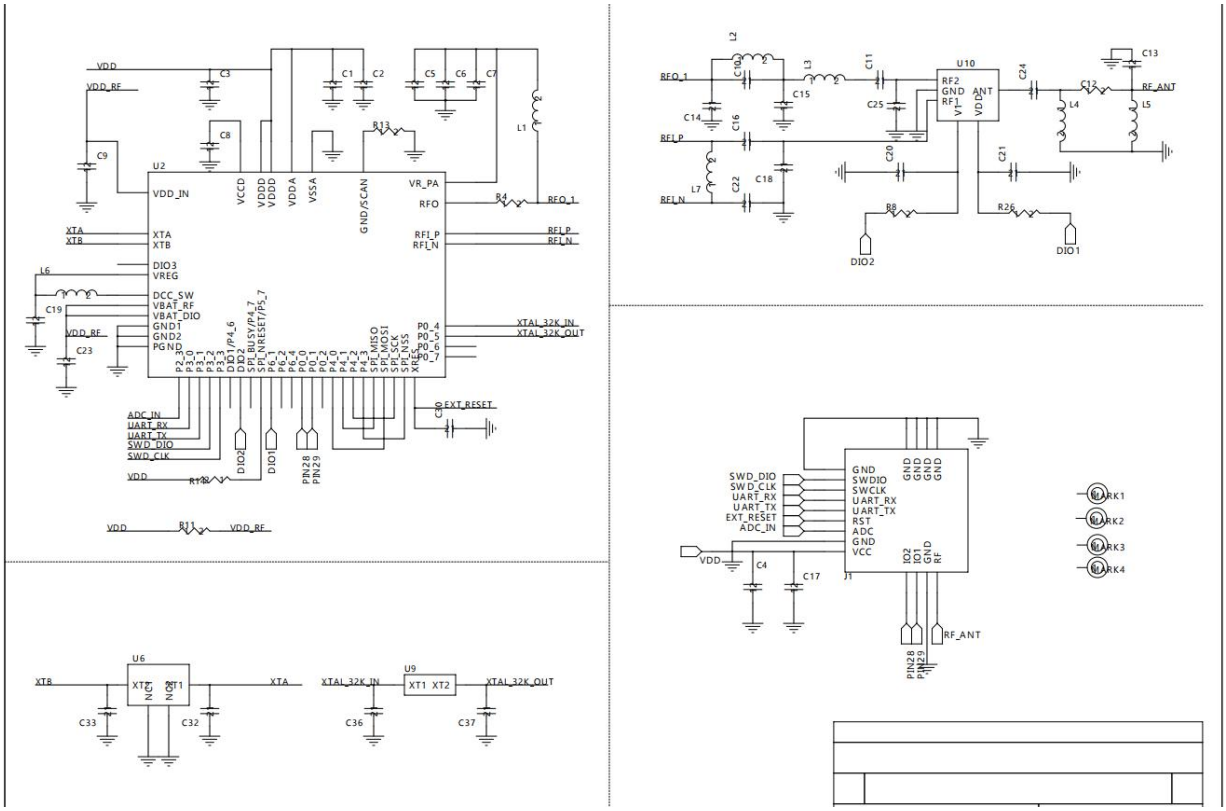

6. Design Guidance

1、Application Circuit

Connect the module's serial port and reset pin RESET to the user's main control MCU to perform serial port communication.

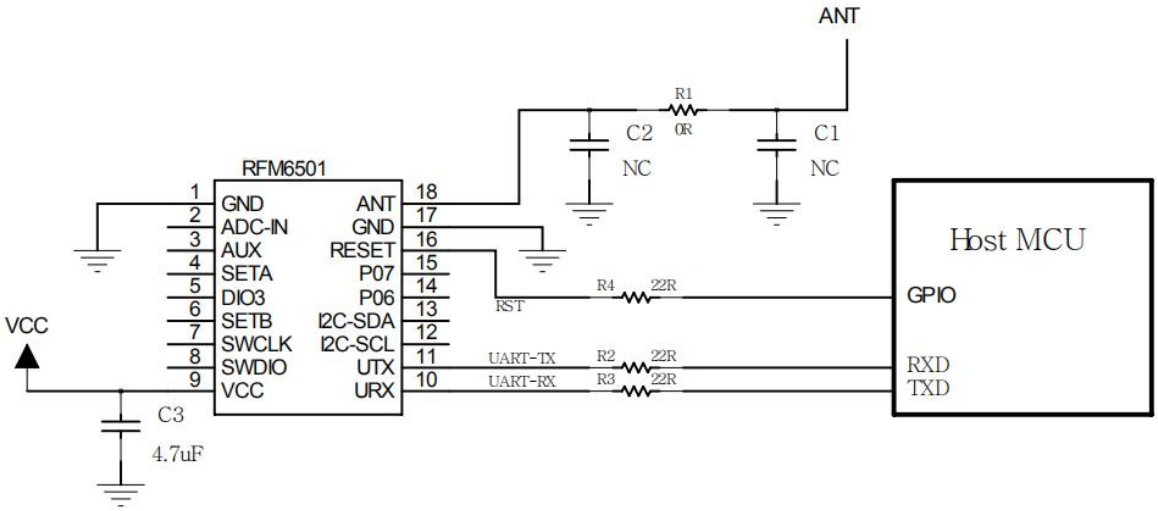

Copyright © 2019 Shenzhen Ai-Thinker Technology Co., Ltd All Rights Reserved

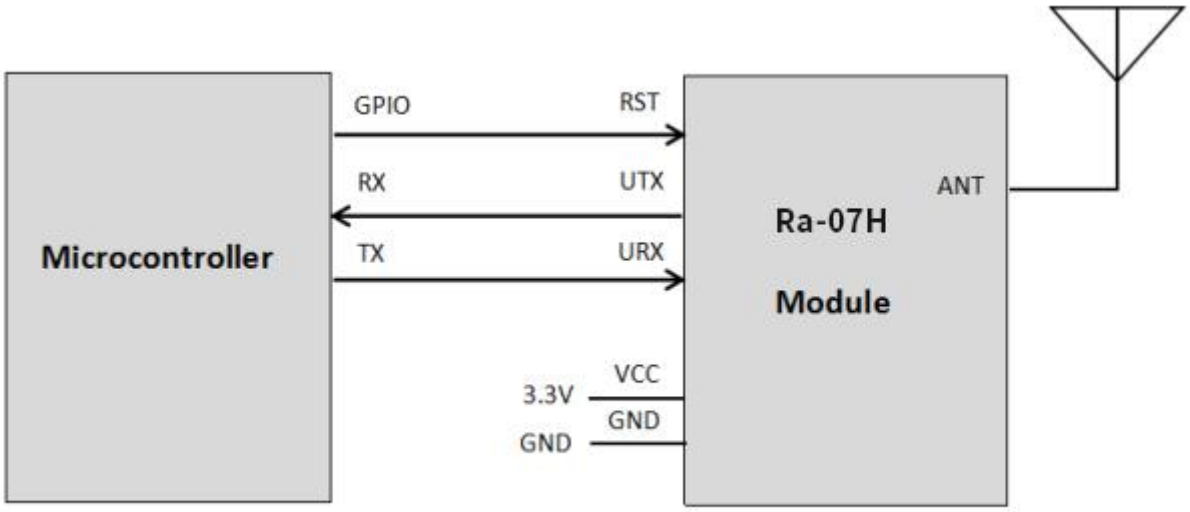

2、Recommended module package design size

Note: Below is the Ra-07H module package diagram, it is recommended to design the PCB board according to this diagram, so that the module can work normally on the PCB board; and pay attention to the design of the pad, the design of the pads on the PCB can not be offset from the corresponding pads of the module, and the expansion of the PCB pads relative to the module pads does not affect the use of the module.

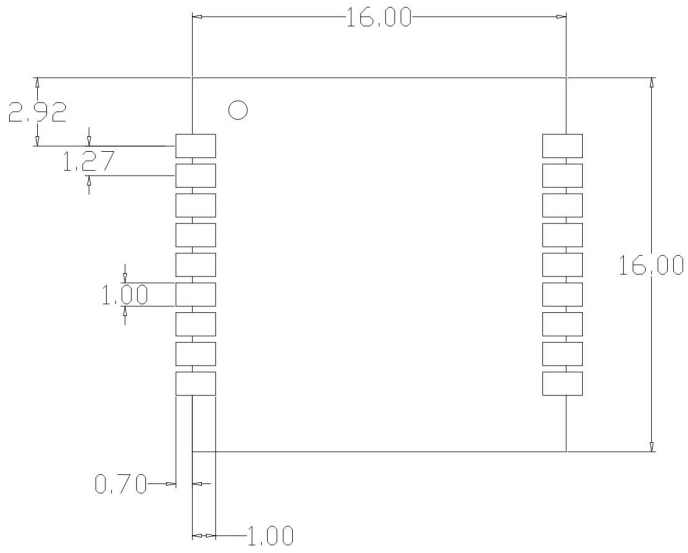

3、Antenna layout requirements

（1）、Put the module on board edge，metal components are prohibited to be placed around the antenna, and module are requested to far away from the high frequency components.

4、Power Supply

（1）、Recommended 3.3 V voltage, Peak:Current over 100mA .

（2）、It is recommended to use the LDO power supply；If DC-DC is used, the ripple is controlled within 30 mV.

Copyright © 2019 Shenzhen Ai-Thinker Technology Co., Ltd All Rights Reserved

（3）、DC-DC power supply circuit is recommended to reserve the position of the dynamic response capacitor, and the output ripple can be optimized when the load change is large.

（4）、The power interface of 3.3V is suggest to increase ESD components.

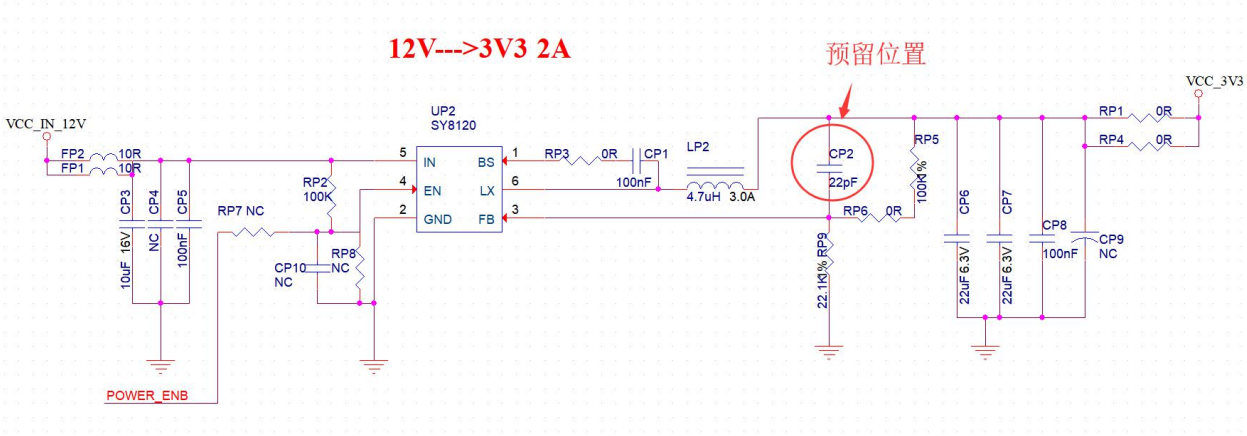

Copyright © 2019 Shenzhen Ai-Thinker Technology Co., Ltd All Rights Reserved

7. Reflow Welding Curve

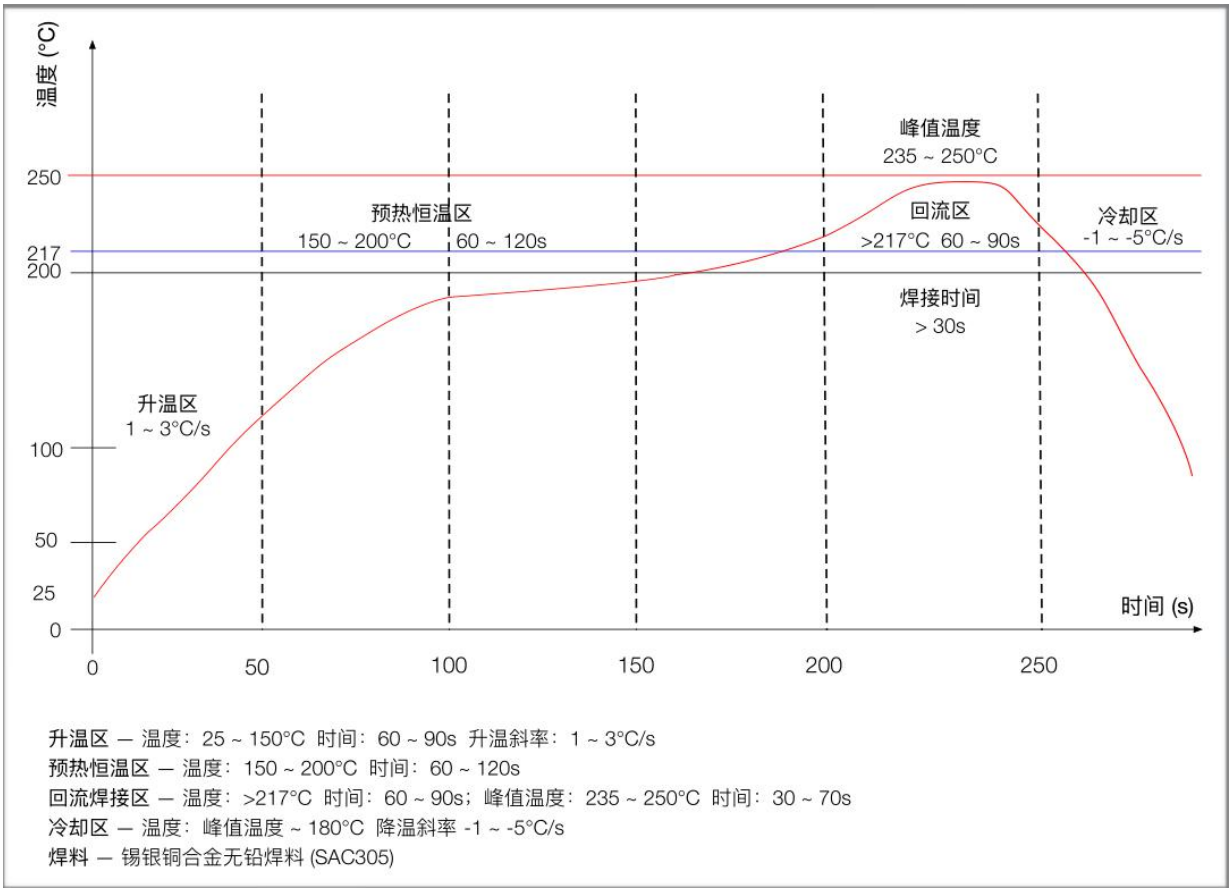

Copyright © 2019 Shenzhen Ai-Thinker Technology Co., Ltd All Rights Reserved

8. Package Information

As shown below,the packing of Ra-07H is a tape .

9. Contact us

Web：https://www.ai-thinker.com

Develop DOCS：https://docs.ai-thinker.com

Company forum：http://bbs.ai-thinker.com

Sampling purchasing：https://anxinke.taobao.com

E-mail：overseas@aithinker.com

sales@aithinker.com

Technic support：support@aithinker.com

Address: Room410, Building C, Huafeng Intelligence Innovation Port, Gushu, Xixiang,

Baoan District, Shenzhen China 518000

Tel：0755-29162996

Copyright © 2019 Shenzhen Ai-Thinker Technology Co., Ltd All Rights Reserved

Integration instructions for host product manufacturers according to KDB 996369 D03 OEM Manual v01

2.2 List of applicable FCC rules

The Ra-07H is an LoRa Module with digitally modulated systems using an FSK/OOK modulation.

It operates on the 903-927MHz band and, therefore, is within U.S. FCC part 15.247 standard

2.3 Specific operational use conditions

The EUT is a LoRa Module

Operation Frequency: 903-927MHz

Modulation Type: FSK/OOK

Number Of Channel: 25CH

Antenna Designation: Spring Antenna

Antenna Gain: 3.0dBi

Ai-Thinker lora Series Module (Ra-07H) designed and developed by Ai-Thinker .This module is used for long distance spread spectrum communication. Its RF chip ASR6501（as show as figure 1）Mainly used LoRa™ remote modem, for ultra-long-distance spread spectrum communication, strong anti-interference, can minimize current consumption. With the help of the SEMTECH the patent technology of LoRa™, ASR6501 with -137dBm high sensititive, long range transmission, high reliablity. Meantime, relative traditional modulation technique, LoRa™ modulation technique has obvious advantages in anti-blocking and selection, It solves the problem that traditional design scheme canot consider distance, anti-interference and power consumption simultaneously.

Its application can be automatic meter reading, home building automation, security system, remote irrigation system.

2.4 Limited module procedures

not applicable; Single Modular Approval Request

2.5 Trace antenna designs

Not applicable;

2.6 RF exposure considerations

To maintain compliance with FCC's RF Exposure guidelines, This equipment should be installed and operated with minimum distance between 20cm the radiator your body: Use only the supplied antenna.

2.7 Antennas

The Ra-07H is an LoRa Module beams signals and communicates with its antenna, which is Spring Antenna. The Spring Antenna gain is 3.0dBi. Antenna could not be in no-load state when module is working. During debugging, it is suggested to add 50 ohms load to the antenna port to avoid damage or performance degradation of the module under long-time no-load condition.

2.8 Label and compliance information

The final end product must be label in a visible area with the following

Host must Contains FCC ID: 2ATPO-RA-07H. If the size of the end product is larger than 8x10cm, then the following FCC part 15.19 statement has to also be available on the label: This device complies with Part 15 of FCC rules. Operation is subject to the following two conditions:

(1) this device may not cause harmful interference and

(2) this device must accept any interference received, including interference that may cause undesired operation.

2.9 Information on test modes and additional testing requirements

Data transfer module demo board can control the EUT work in RF test mode at specified test channel.

2.10 Additional testing, Part 15 Subpart B disclaimer

The module without unintentional-radiator digital circuit, so the module does not required an evaluation by FCC Part 15 Subpart B. The host should be evaluated by the FCC Subpart B.

ATTENTION

This device is intended only for OEM integrators under the following conditions:

1) The antenna must be installed such that 20 cm is maintained between the antenna and users, and

2) This device and its antenna(s) must not be co‐located with any other transmitters except in accordance with FCC multi‐transmitter product procedures. Referring to the multi‐transmitter policy, multiple transmitter(s) and module(s) can be operated simultaneously without C2P.

3) For all products market in US, OEM has to limit the Operating Frequency: 903-927MHz by supplied firmware programming tool. OEM shall not supply any tool or info to the end‐user regarding to Regulatory Domain change.

USERS MANUAL OF THE END PRODUCT:

In the user manual of the end product, the end user has to be informed to keep at least 20cm separation with the antenna while this end product is installed and operated. The end user has to be informed that the FCC radio‐frequency exposure guidelines for an uncontrolled environment can be satisfied. The end user has to also be informed that any changes or modifications not expressly approved by the manufacturer could void the user's authority to operate this equipment.

If the size of the end product is smaller than 8x10cm, then additional FCC part 15.19 statement is required to be available in the users manual: This device complies with Part 15 of FCC rules. Operation is subject to the following two conditions:

(1) this device may not cause harmful interference and

(2) this device must accept any interference received, including interference that may cause undesired operation.

FCC WARNING

This device complies with part 15 of the FCC Rules. Operation is subject to the following two conditions:

Any changes or modifications not expressly approved by the party responsible for compliance could void the user's authority to operate the equipment.

NOTE: This equipment has been tested and found to comply with the limits for a Class B digital device, pursuant to Part 15 of the FCC Rules. These limits are designed to provide reasonable protection against harmful interference in a residential installation. This equipment generate, uses and can radiate radio frequency energy and, if not installed and used in accordance with the instructions, may cause harmful interference to radio communications. However, there is no guarantee that interference will not occur in a particular installation.

If this equipment does cause harmful interference to radio or television reception, which can be determined by turning the equipment off and on, the user is encouraged to try to correct the interference by one or more of the following measures:

-- Reorient or relocate the receiving antenna.

-- Increase the separation between the equipment and receiver.

-- Connect the equipment into an outlet on a circuit different from that to which the receiver is connected.

-- Consult the dealer or an experienced radio/TV technician for help.