TG-02F Specification

Version V1.0.0

Copyright©2022

Copyright © 2022 Shenzhen Ai-Thinker Technology Co., Ltd All Rights Reserved

Document resume

Version	Date	Develop/revise content	Edition	Approve
V1.0.0	2022.5.10	First Edition	ShengXin Zhou	NingGuan

Copyright © 2022 Shenzhen Ai-Thinker Technology Co., Ltd All Rights Reserved

Content

1. Product Overview 4
1.1. Characteristic 5
2. Main parameters 5
2.1. Static electricity requirements 6
2.2. Electrical characteristics 6
2.3. Bluetooth Rf Performance 6
2.4. Power 7
3. Appearance Dimensions 8
4. Pin definition 9
5. Schematic 11
6. Antenna parameters 12
6.1. Test conditions for the antenna 12
6.2. Antenna S parameter 13
6.3. Antenna Gain and Efficiency 13
6.4. Antenna Field Type Diagram 14
7. Design Guidance 15
7.1. Module application circuit 15
7.2. Antenna layout requirements 15
7.3. Power supply 16
7.4. GPIO 17
8. Flow welding curve diagram 18
9. Product related models 19
10. Product packaging information 20
11. Contact us 20
Disclaimer and copyright notice 21
Notice 21

Copyright © 2022 Shenzhen Ai-Thinker Technology Co., Ltd All Rights Reserved

1. Product Overview

TG-02F is a bluetooth module developed by Shenzhen Ai-Thinker Technology Co., LTD. The core processor chip TG7120B(SOP16) is a highly integrated bluetooth System-level chip (SoC) with low power consumption, designed for Internet of Things (IoT), mobile devices, wearable electronic devices, smart home and other applications.

TG-02F module features a high-performance low-power 32-bit CK802 processor, 64KB SRAM, 512KB Flash, 96KB ROM, and 256 bit EFuse. In addition, TG-02F module supports SECURITY mechanism, application and OTA upgrade under BLE protocol, has a variety of unique hardware security mechanism, hardware encryption support AES algorithm.

TG-02F module provides a wealth of peripheral interfaces, including UART, PWM, ADC, I2C, SPI, PDM, DMA and up to 11 IO ports.

TG-02F module supports low power Bluetooth: BLE 5.1, BLE Mesh. Bluetooth speed support: 125Kbps, 500Kbps, 1Mbps, 2Mbps. Support broadcast extension, multi - broadcast, channel selection.

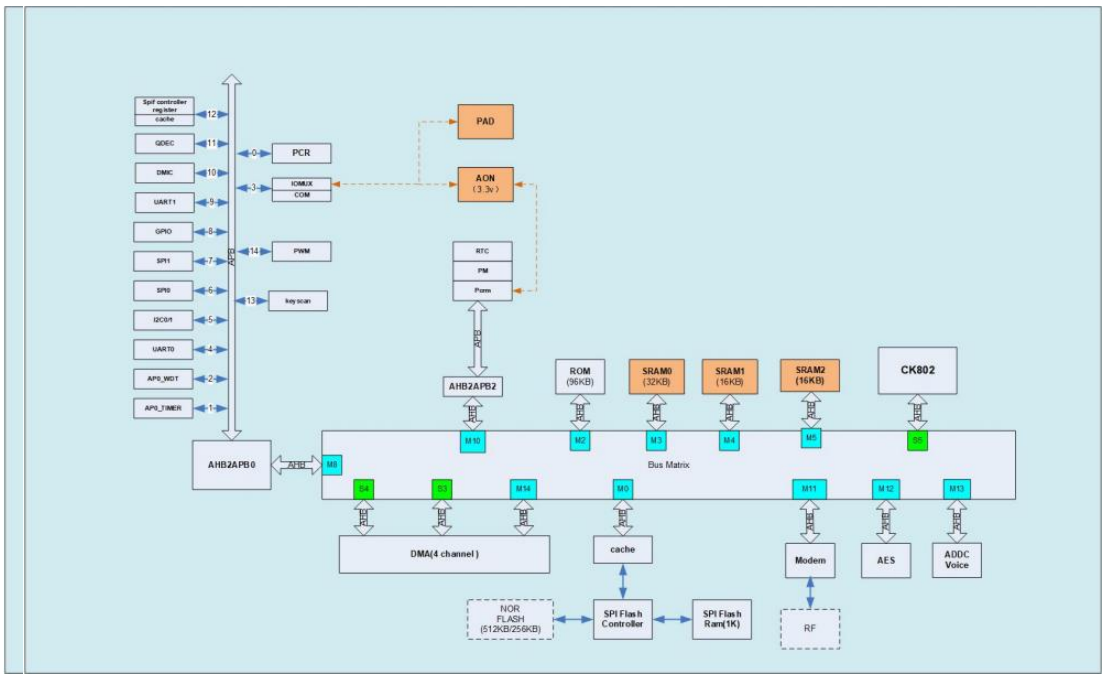

Figure 1 Main chip architecture diagram

Copyright © 2022 Shenzhen Ai-Thinker Technology Co., Ltd All Rights Reserved

1.1. Characteristic

- Support BLE5.1，Speed Support：125Kbps,500Kbps,1Mbps,2Mbps
- 64 KB SRAM，512KB flash, 96 KB ROM，256 bit efuse
- Support UART/GPIO/ADC/PWM/I2C/SPI/PDM/DMA
- The package is SMD-20
- Multiple sleep modes are supported and the deep sleep current is less than 1uA
- Fixed universal AT instruction for quick use
- Support secondary development, integrated Windows development environment

2. Main parameters

Table 1 Description of the main parameters

Model	TG-02F
Package	SMD-22
Size	24.0*16.0*2.8(±0.2)mm
Antenna	on-board antenna
Frequency	2400 ~ 2483.5MHz
Operating temperature	-40 ℃ ~ 85 ℃
Storage temperature	-40 ℃ ~ 125 ℃ , < 90%RH
Power supply	Support voltage 2.7V ~ 3.6V,supply current ⩾200mA
Interface	UART/GPIO/ADC/PWM/I2C/I2S/SPI/PDM/DMA
IO	11
UART rate	Default 115200 bps
Bluetooth	BLE 5.1
Security	AES-128
SPI Flash	512KB

Copyright © 2022 Shenzhen Ai-Thinker Technology Co., Ltd All Rights Reserved

2.1. Static electricity requirements

TG-02F module is an electrostatic sensitive device. Therefore, you need to take special precautions when carrying it.

Figure 2 ESD preventive measures

2.2. Electrical characteristics

Table 2 Electrical characteristics table

Parameters		Conditions	Min.	Typical value	Max.	Unit
Power Supply		VDD	2.7	3.3	3.6	V
I/O	V_{IL}/V_{IH}	-	-0.3/0.75VDD	-	0.25VDD/VDD+0.3	V
	V_{OL}/V_{O}	-	N/0.8VIO	-	0.1VIO/N	V
	I_{MAX}	-	-	-	12	mA

2.3. Bluetooth Rf Performance

Table 3 Bluetooth RF performance Table

Description	Typical value			Unit
Working Central Frequency	2400 - 2483.5			MHz
Output Power				
Model	Min.	Typical value	Max.	Unit
BLE 2Mbps	-20	8	10	dBm
BLE 1Mbps	-20	8	10	dBm
BLE 500Kbps	-20	8	10	dBm
BLE 125kbps	-20	8	10	dBm
Receive Sensitivity				
Model	Min.	Typical value	Max.	Unit
BLE 2Mbps	-	-94	-	dBm
BLE 1Mbps	-	-95	-	dBm

Copyright © 2022 Shenzhen Ai-Thinker Technology Co., Ltd All Rights Reserved

2.4. Power

The following power consumption figures are based on a 3.3V power supply, an ambient temperature of 25°C, and an internal voltage regulator.

- All measurements were made at the antenna interface without SAW filter.
- All emission data are measured in TX_Burst_Test & RX_Burst_Test mode.

Table 4 Power consumption table

Model	Min.	AVG	Max.	Unit
TX_Burst_Test Power output 8dBm	-	11.5	-	mA
TX_Burst_Test Power output 5dBm	-	9.6	-	mA
TX_Burst_Test Power output 0dBm	-	8.6	-	mA
RX_Burst_Test	-	8	-	mA
Sleep (IO wake up only)	-	0.3	-	uA
Sleep(with 32KHz RTC and all SRAM retention)	-	6.5	-	uA
Power ON	-	6.24	-	mA

Copyright © 2022 Shenzhen Ai-Thinker Technology Co., Ltd All Rights Reserved

3. Appearance Dimensions

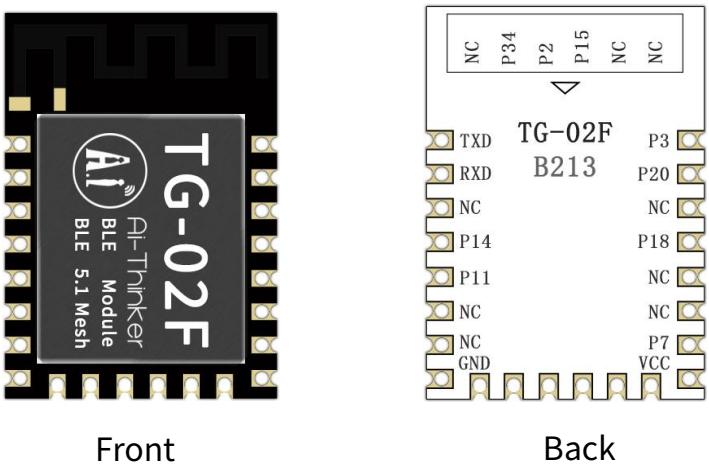

Figure 3 Appearance diagram pictures is for reference only,subject to physical objects)

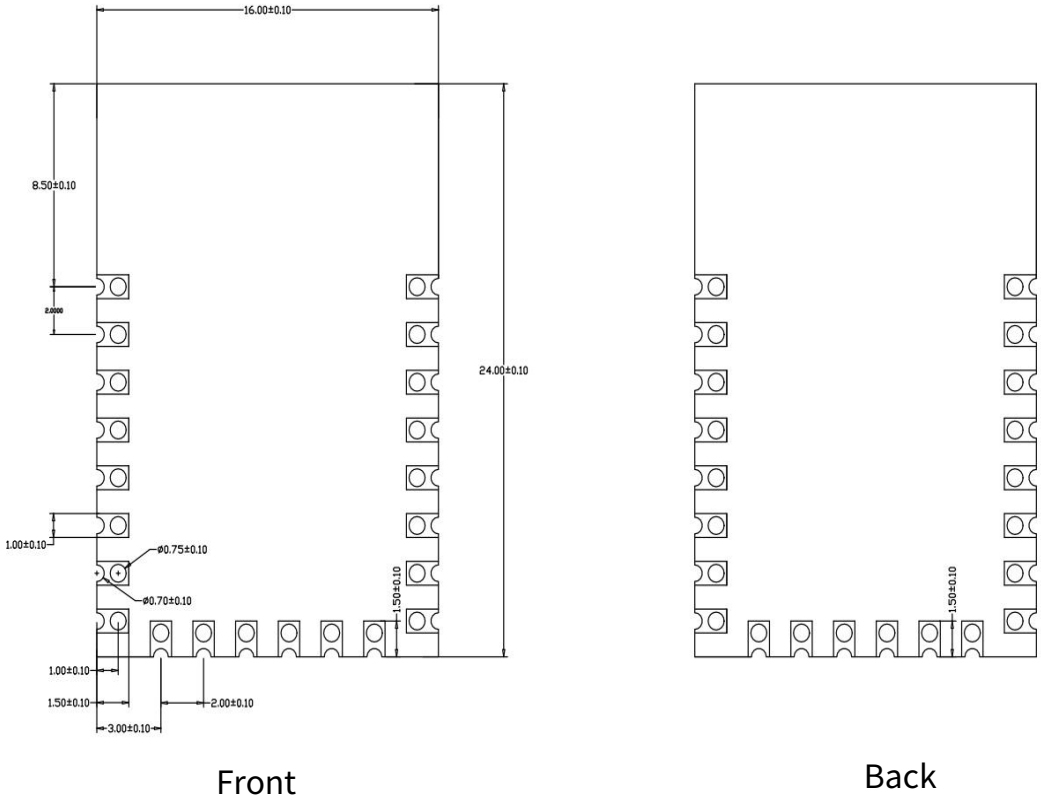

Figure 4 module size diagram

Copyright © 2022 Shenzhen Ai-Thinker Technology Co., Ltd All Rights Reserved

4. Pin definition

TG-02F module is connected with a total of 22 pins, as shown in the schematic diagram of pins, pin function definition table is the interface definition.

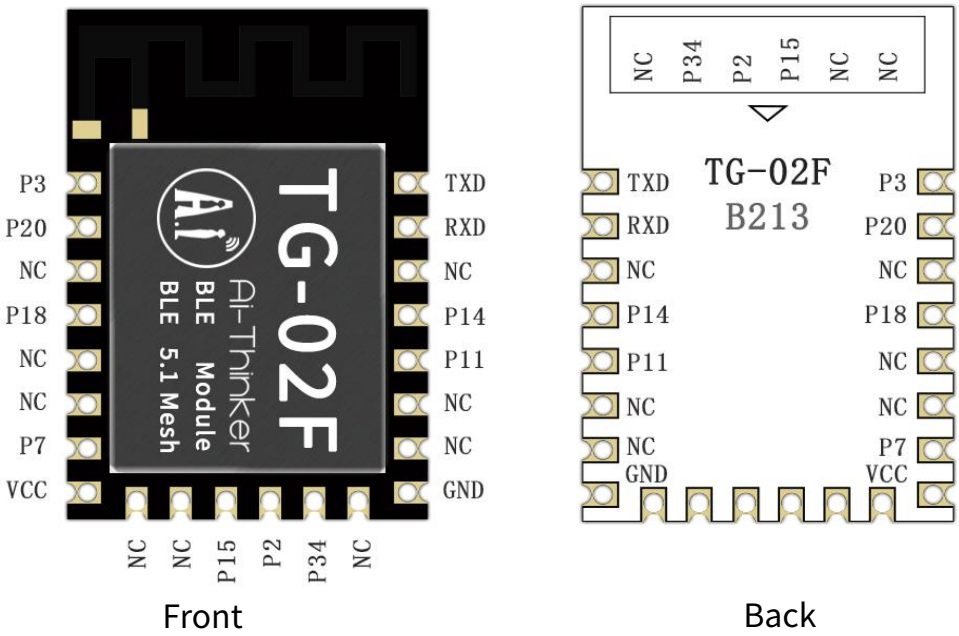

Figure 5 Schematic diagram of module pins(top view)

Copyright © 2022 Shenzhen Ai-Thinker Technology Co., Ltd All Rights Reserved

Table 6 Pin function definition table

No.	Name	Function
1	P3	GPIO3
2	P20	GPIO20/ ADC input 9 / PGA positive input
3	NC	NC
4	P18	GPIO18/ ADC input 7 / PGA negative input
5	NC	NC
6	NC	NC
7	P7	GPIO7
8	VCC	Power access (positive pole of power supply)
9	NC	NC
10	NC	NC
11	P15	GPIO15/ ADC input 4 / micbias output
12	P2	GPIO2
13	P34	GPIO34
14	NC	NC
15	GND	Ground(Power negative electrode)
16	NC	NC
17	NC	NC
18	P11	GPIO11/ADC input 0
19	P14	GPIO14/ADC input 3
20	NC	NC
21	RXD	RXD/GPIO10
22	TXD	TXD/GPIO9

Copyright © 2022 Shenzhen Ai-Thinker Technology Co., Ltd All Rights Reserved

5. Schematic

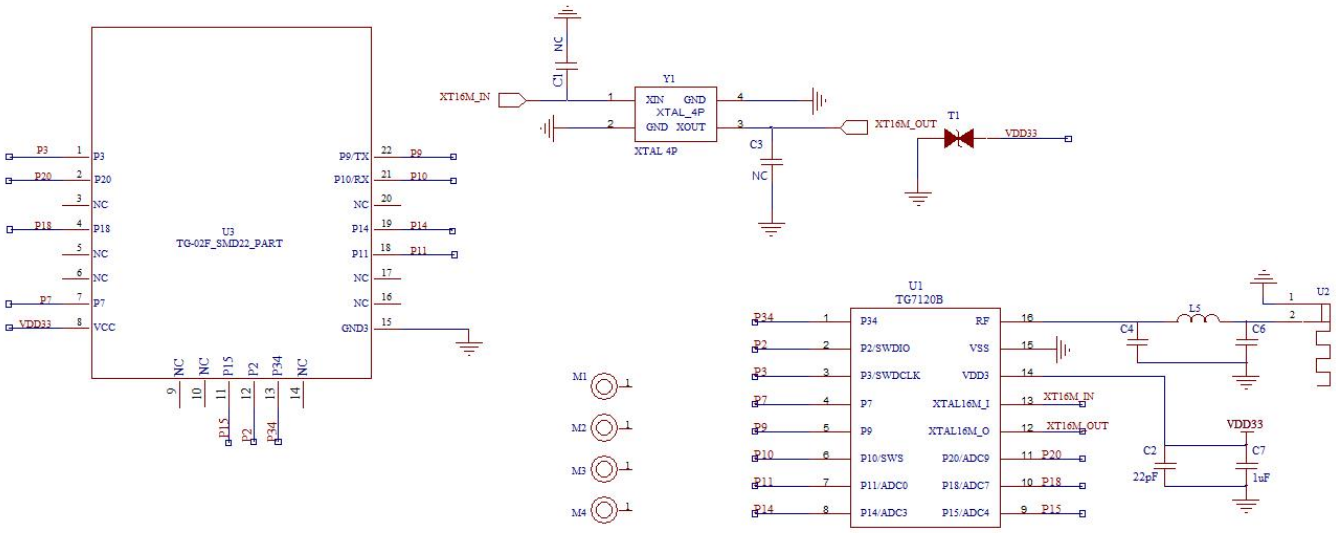

Figure 6 Module schematic

Copyright © 2022 Shenzhen Ai-Thinker Technology Co., Ltd All Rights Reserved

6. Antenna parameters

6.1. Test conditions for the antenna

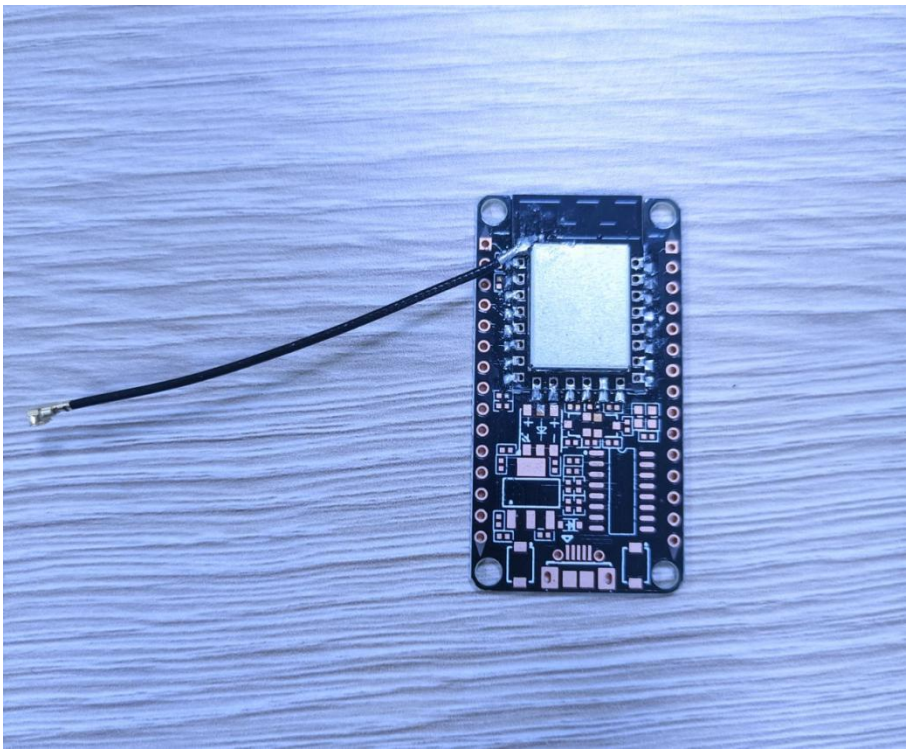

Figure 7 Antenna test conditions

Copyright © 2022 Shenzhen Ai-Thinker Technology Co., Ltd All Rights Reserved

6.2. Antenna S parameter

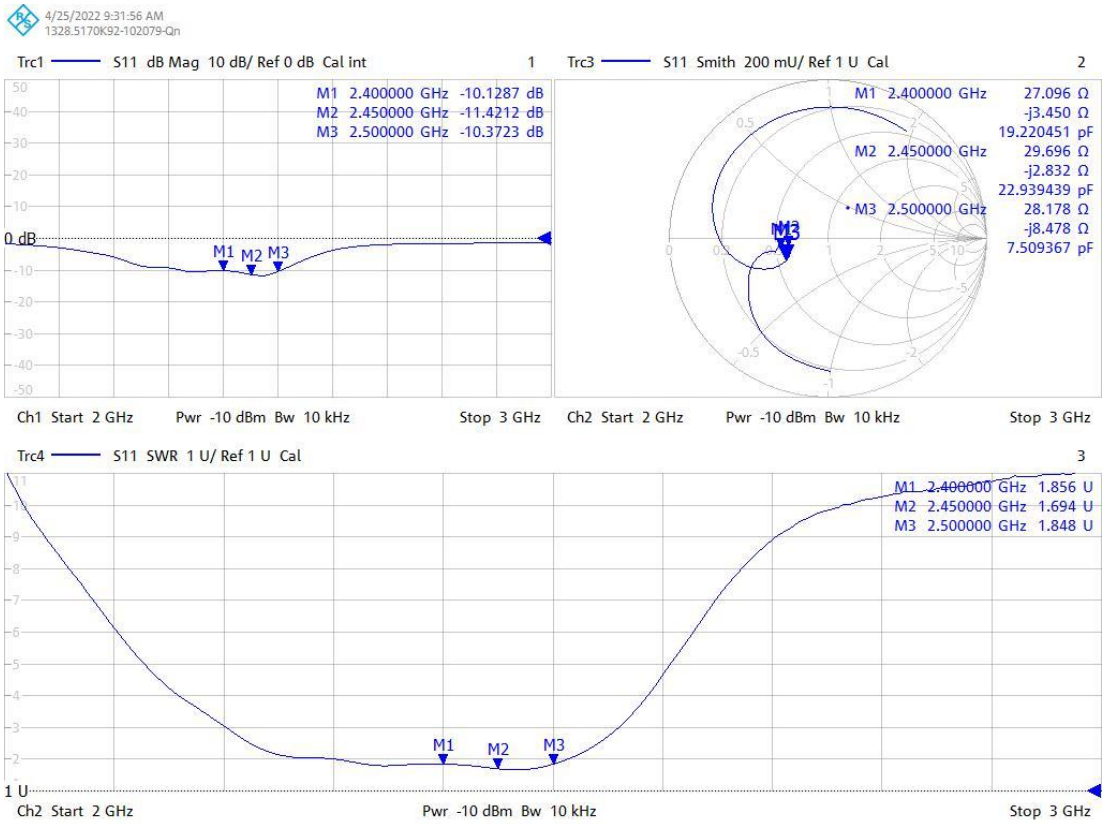

Figure 8 Antenna S parameters

6.3. Antenna Gain and Efficiency

Table 7 Antenna Gain and efficiency

Frequency ID	1	2	3	4	5	6	7	8	9	10	11
Frequency (MHz)	2400.0	2410.0	2420.0	2430.0	2440.0	2450.0	2460.0	2470.0	2480.0	2490.0	2500.0
Gain (dBi)	1.25	1.17	1.44	1.13	1.14	1.50	1.14	1.47	1.09	1.22	1.10
Efficiency (%)	59.76	60.02	59.66	59.97	56.41	63.77	64.74	64.77	63.80	61.40	60.07

Copyright © 2022 Shenzhen Ai-Thinker Technology Co., Ltd All Rights Reserved

6.4. Antenna Field Type Diagram

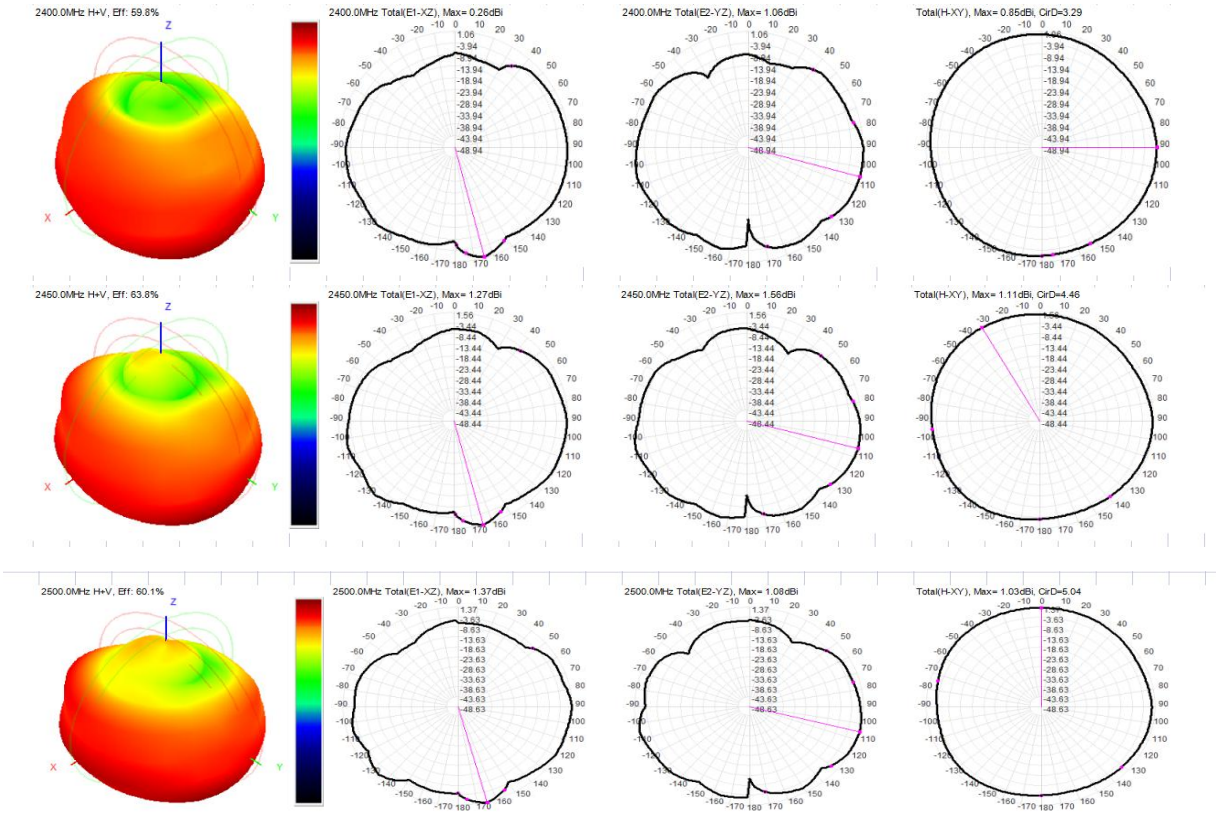

Figure 9 Antenna field type diagram

Copyright © 2022 Shenzhen Ai-Thinker Technology Co., Ltd All Rights Reserved

7. Design Guidance

7.1. Module application circuit

(≥200mA,suggest use DC-DC or LDO independent power supply)

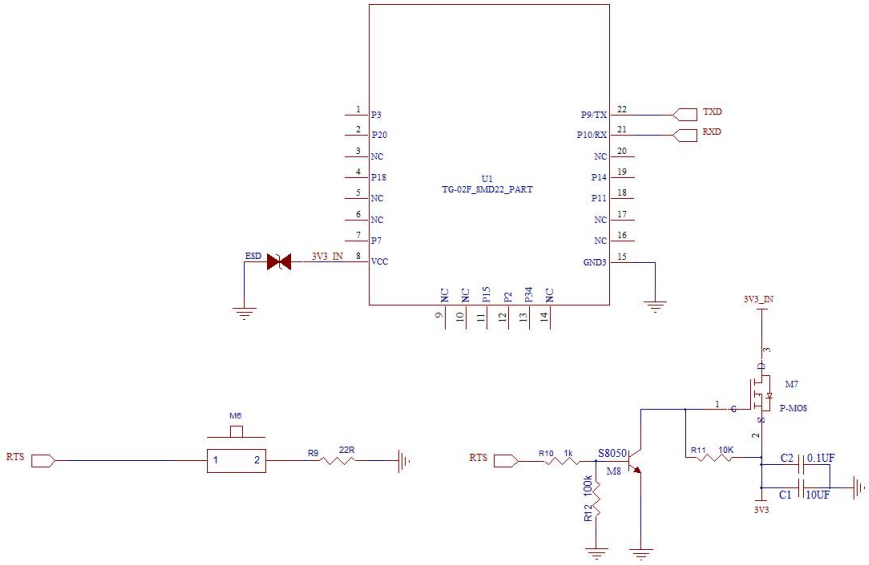

Figure 10 Application circuit diagram

Note：

- Because THERE is no reset pin for TG-02F, we realize the reset by cutting off power. A triode and PMOS can be used at the power input end to realize the reset of the module.

7.2. Antenna layout requirements

- The installation position on the motherboard suggests the following 2 ways:

Scheme 1:Put the module on the edge of the motherboard,And the antenna area extends out the edge of the motherboard.

Scheme 2:Put the module on the edge of the motherboard,and empty an area along the antenna position.

- To meet the performance of the on-board antenna,metal parts are not placed around the antenna,away from the high-frequency device.

Copyright © 2022 Shenzhen Ai-Thinker Technology Co., Ltd All Rights Reserved

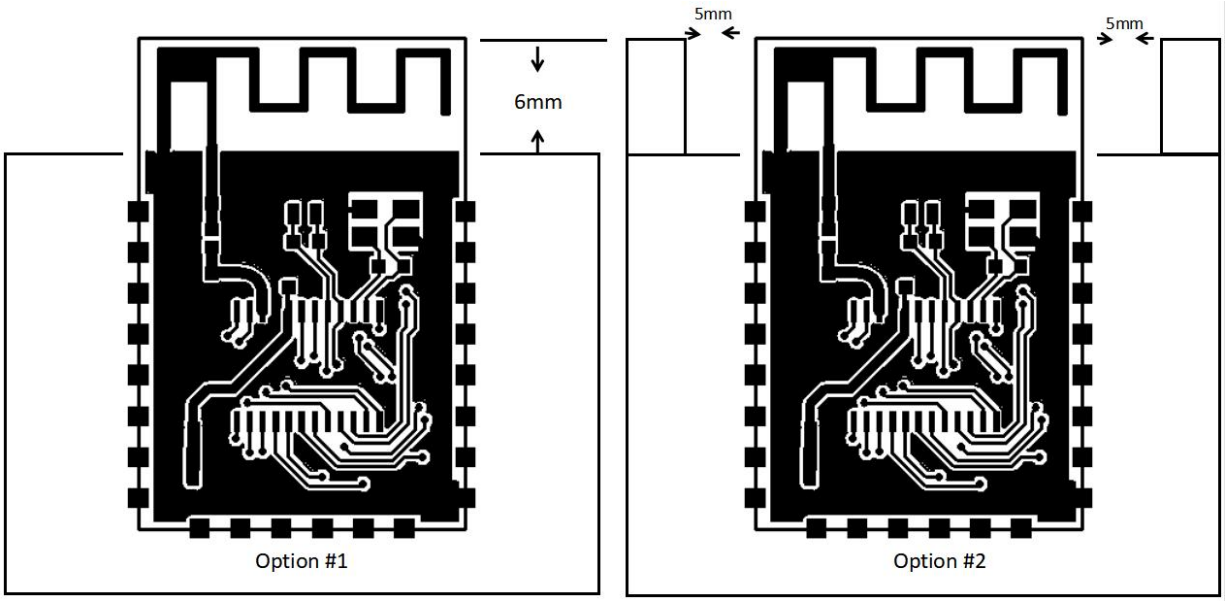

Figure 11 Antenna layout diagram

7.3. Power supply

- Recommended 3.3V voltage,peak current over 200mA.
- Power supply is recommend to use LDO; If the DC-DC is used,the ripple is recommended to be controlled within 30mV.
- DC-DC power supply circuit proposes to reserve the dynamic response capacitance to optimize the output ripple with large load changes.
- 3.3V power interface it is recommended to add ESD devices.

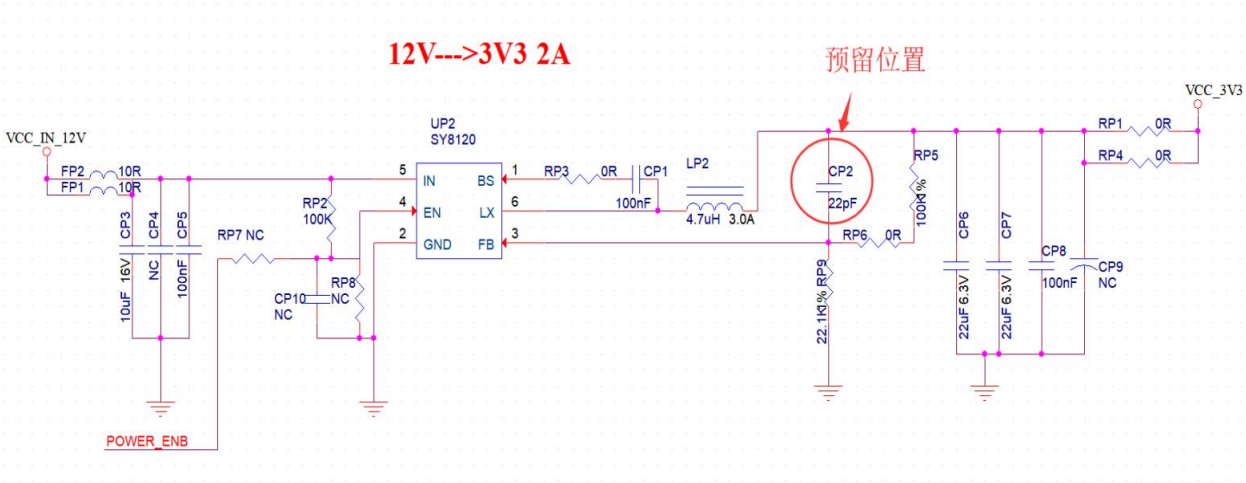

Figure 12 Dc-dc step-down circuit diagram

Copyright © 2022 Shenzhen Ai-Thinker Technology Co., Ltd All Rights Reserved

7.4. GPIO

- Some IO ports are introduced outside the module. If necessary, it is recommended to use a resistor of 10-100 ohms in series on the IO ports. This inhibits overshoot and makes both sides level more stable. It is helpful for EMI and ESD.
- For special I/O ports to be pulled up and down, refer to the usage instructions in the specifications, which may affect the module startup configuration.
- The IO port of the module is 3.3V. If the IO level of the main control and the module do not match, a level conversion circuit needs to be added.
- If the I/O port is directly connected to a peripheral port or terminals, for example, a pin row, reserve an ESD device near the terminal of the I/O cable.

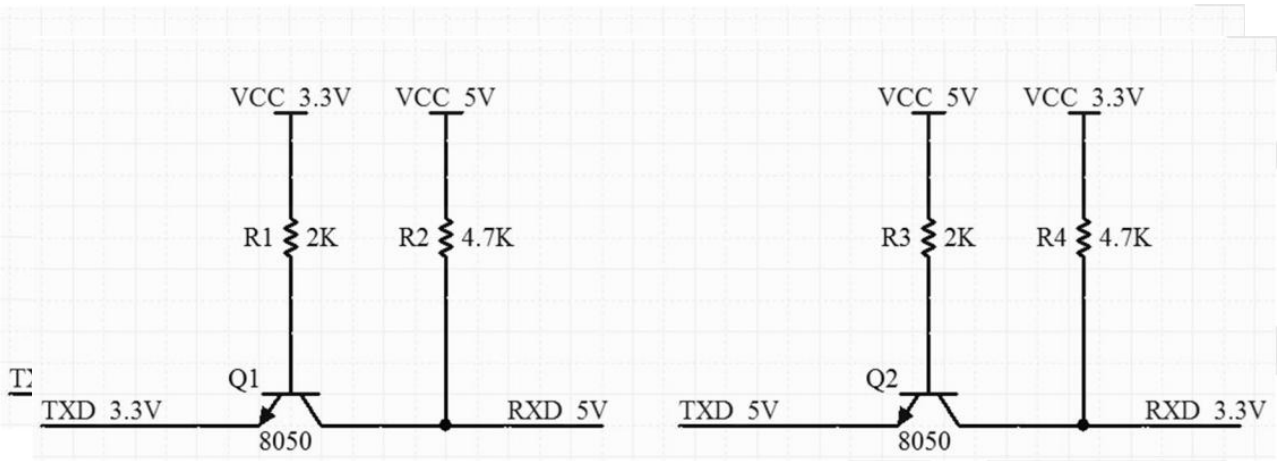

Figure 13 Level convert circuit

Copyright © 2022 Shenzhen Ai-Thinker Technology Co., Ltd All Rights Reserved

8. Flow welding curve diagram

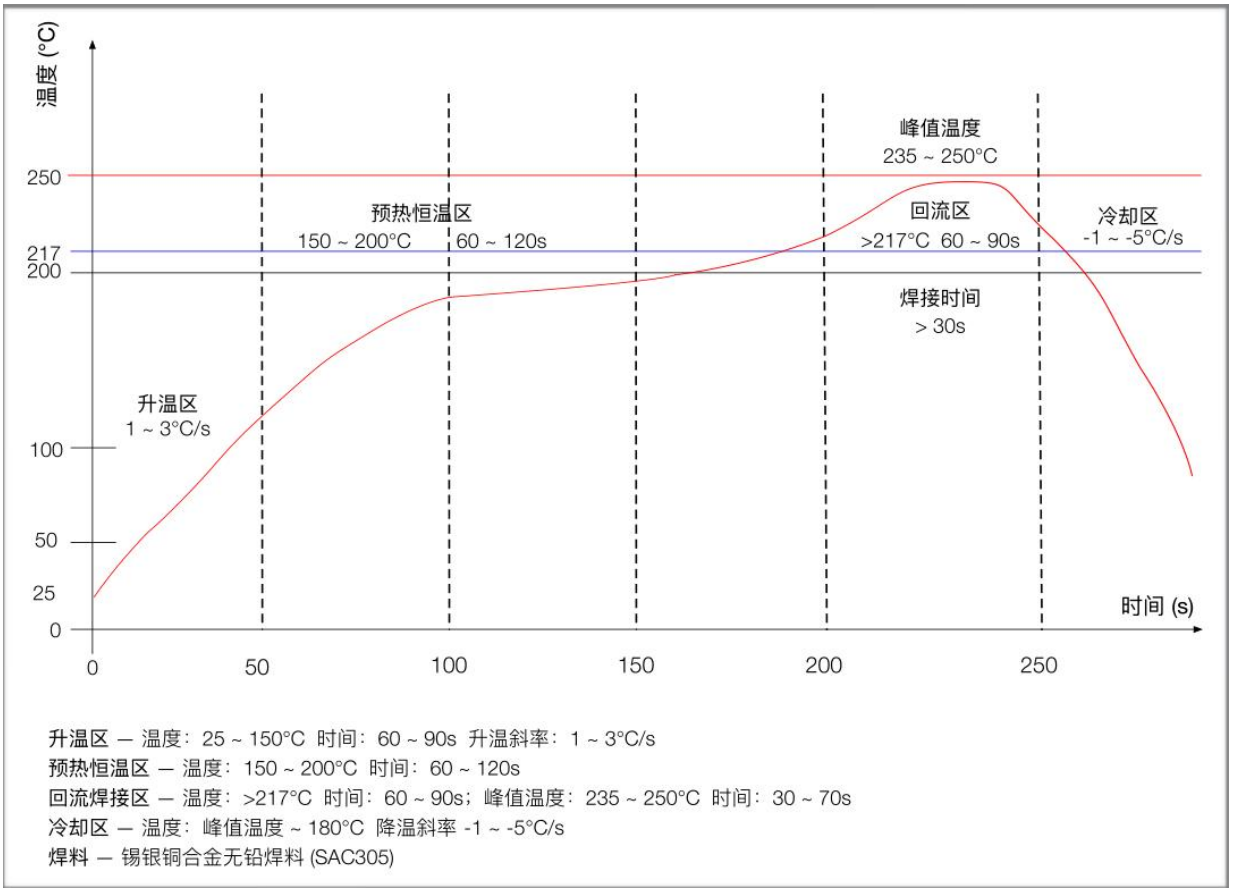

Figure 14 Flow welding diagram

Copyright © 2022 Shenzhen Ai-Thinker Technology Co., Ltd All Rights Reserved

9. Product related models

Table 8 Product related model list

Model	Power Supply	Package	Size	Antenna
TG-02F	2.7V ~ 3.6V，I≥200mA	SMD-22	24.0*16.0*3.1(±0.2)mm	Default on-board PCB antenna Optional external spring antenna
TG-02M	2.7V ~ 3.6V，I≥200mA	DIP-18 Gold finger plug-in	18.0*18.0*2.8(±0.2)mm	On-board PCB antenna
TG-02	2.7V ~ 3.6V，I≥200mA	SMD-20	18.6*12.2*2.8(±0.2)mm	On-board PCB antenna
TG-02F-Kit	5V, I>200mA	DIP-30	49.66*25.40(±0.2)mm	On-board PCB antenna
TG-02M-Kit	5V, I>200mA	DIP-20	32.73*28.45(±0.2)mm	On-board PCB antenna
TG-02-Kit	5V, I>200mA	DIP-19	45.54*29.93(±0.2)mm	On-board PCB antenna
Product related information : https://docs.ai-thinker.com				

Copyright © 2022 Shenzhen Ai-Thinker Technology Co., Ltd All Rights Reserved

10. Product packaging information

TG-02F module was packaged in a tape，1350pcs/reel. As shown in the below image:

Figure 15 Package and packing diagram

11.Contact us

Ai-Thinker official website　　Office forum　　Develop DOCS

LinkedIn　　Tmall shop　　Taobao shop　　Alibaba shop

Technic support email：support@aithinker.com

Domestic business cooperation：sales@aithinker.com

Overseas business cooperation：overseas@aithinker.com

Company Address：Room 403,408-410, Block C, Huafeng Smart Innovation Port, Gushu 2nd Road, Xixiang, Baoan District, Shenzhen.

Tel：+86-0755-29162996

WeChat mini program　　WeChat official account

Copyright © 2022 Shenzhen Ai-Thinker Technology Co., Ltd All Rights Reserved

Disclaimer and copyright notice

The information in this article,including the URL address for reference,is subject to change without notice.

The document is provided"as is"without any guarantee responsibility,including any guarantee for merchantability,suitability for a specific purpose,or non-infringement,and any guarantee mentioned elsewhere in any proposal,specification or sample.This document does not bear any responsibility,including the responsibility for infringement of any patent rights arising from the use of the information in this document.This document does not grant any license for the use of intellectual property rights in estoppel or other ways,whether express or implied.

The test data obtained in the article are all obtained from Ai-Thinker's laboratory tests,and the actual results may vary slightly.

All brand names,trademarks and registered trademarks mentioned in this article are the property of their respective owners,and it is hereby declared.

The final interpretation right belongs to Shenzhen Ai-Thinker Technology Co.,Ltd.

Notice

Due to product version upgrades or other reasons,the contents of this manual may be changed.

Shenzhen Ai-Thinker Technology Co.,Ltd.reserves the right to modify the contents of this manual without any notice or prompt.

This manual is only used as a guide.Shenzhen Ai-Thinker Technology Co.,Ltd.makes every effort to provide accurate information in this manual.However,Shenzhen Ai-Thinker Technology Co.,Ltd.does not guarantee that the contents of the manual are completely free of errors.All statements and information in this manual And the suggestion does not constitute any express or implied guarantee.

Copyright © 2022 Shenzhen Ai-Thinker Technology Co., Ltd All Rights Reserved

Integration instructions for host product manufacturers according to KDB 996369 D03 OEM Manual v01

2.2 List of applicable FCC rules

The TG-02F is an BT Module with GFSK modulation. It operates on the 2402MHz~2480MHz band and, therefore, is within U.S. FCC part 15.247 standard

2.3 Specific operational use conditions

The EUT is a BT Module

BLE:

Operation Frequency: 2402-2480MHz for BLE;

Modulation Type: GFSK

Number Of Channel: 40 channels

Antenna Designation: PCB Antenna

Antenna Gain: 1.5dBi

Support BLE5.1,rate support: 1Mbps,2Mbps Own 64KB SRAM，256KB flash,96 KB ROM，256bit efuse

Support UART/GPIO/ADC/PWM/I2C/SPI/PDM/DMA interface Adopt SMD-22 package，

Support multiple sleep modes,deep sleep current is less than 1uA，

Support for serial local upgrade and remote Firmware upgrade(FOTA)

Universal AT instructions can be used easy and quickly，

Support for secondary development, with an integrated Windows development environment

2.4 Limited module procedures

not applicable; Single Modular Approval Request

2.5 Trace antenna designs

Not applicable;

2.6 RF exposure considerations

The device has been evaluated to meet general RF exposure requirement. The device can be used in portable exposure condition without restriction

2.7 Antennas

The TG-02F is an BT Module beams signals and communicates with its antenna, which is PCB

Copyright © 2022 Shenzhen Ai-Thinker Technology Co., Ltd All Rights Reserved

Antenna. The PCB Antenna gain is 1.5dBi. Antenna could not be in no-load state when module is working. During debugging, it is suggested to add 50 ohms load to the antenna port to avoid damage or performance degradation of the module under long-time no-load condition.

2.8 Label and compliance information

The final end product must be label in a visible area with the following

Host must Contains FCC ID: 2ATPO-TG02. If the size of the end product is larger than 24x16mm, then the following FCC part 15.19 statement has to also be available on the label: This device complies with Part 15 of FCC rules. Operation is subject to the following two conditions:

(1) this device may not cause harmful interference and

(2) this device must accept any interference received, including interference that may cause undesired operation.

2.9 Information on test modes and additional testing requirements

Data transfer module demo board can control the EUT work in RF test mode at specified test channel.

2.10 Additional testing, Part 15 Subpart B disclaimer

The module without unintentional-radiator digital circuit, so the module does not required an evaluation by FCC Part 15 Subpart B. The host should be evaluated by the FCC Subpart B.

ATTENTION

This device is intended only for OEM integrators under the following conditions:

1) The antenna must be installed such that 5 mm is maintained between the antenna and users, and

2) This device and its antenna(s) must not be co - located with any other transmitters except in accordance with FCC multi - transmitter product procedures. Referring to the multi - transmitter policy, multiple transmitter(s) and module(s) can be operated simultaneously without C2P.

3) For all products market in US, OEM has to limit the Operating Frequency: 2412-2462 MHz /2402-2480MHz by supplied firmware programming tool. OEM shall not supply any tool or info to the end - user regarding to Regulatory Domain change.

USERS MANUAL OF THE END PRODUCT:

In the user manual of the end product, the end user has to be informed to keep at least 5mm separation with the antenna while this

Copyright © 2022 Shenzhen Ai-Thinker Technology Co., Ltd All Rights Reserved

end product is installed and operated. The end user has to be informed that the FCC radio - frequency exposure guidelines for an uncontrolled environment can be satisfied. The end user has to also be informed that any changes or modifications not expressly approved by the manufacturer could void the user's authority to operate this equipment.

If the size of the end product is smaller than 8x10cm, then additional FCC part 15.19 statement is required to be available in the users manual: This device complies with Part 15 of FCC rules. Operation is subject to the following two conditions:

(1) this device may not cause harmful interference and

(2) this device must accept any interference received, including interference that may cause undesired operation.

FCC WARNING

This device complies with part 15 of the FCC Rules. Operation is subject to the following two conditions:

Any changes or modifications not expressly approved by the party responsible for compliance could void the user's authority to operate the equipment.

NOTE: This equipment has been tested and found to comply with the limits for a Class B digital device, pursuant to Part 15 of the FCC Rules. These limits are designed to provide reasonable protection against harmful interference in a residential installation. This equipment generate, uses and can radiate radio frequency energy and, if not installed and used in accordance with the instructions, may cause harmful interference to radio communications. However, there is no guarantee that interference

will not occur in a particular installation. If this equipment does cause harmful interference to radio or television reception, which can be determined by turning the equipment off and on, the user is encouraged to try to correct the interference by one or more of the following measures:

-- Reorient or relocate the receiving antenna.

-- Increase the separation between the equipment and receiver.

-- Connect the equipment into an outlet on a circuit different from that to which the receiver is connected.

-- Consult the dealer or an experienced radio/TV technician for help.

Copyright © 2022 Shenzhen Ai-Thinker Technology Co., Ltd All Rights Reserved