Project No：XW-01

Date：2020.04.20

Rev：V1.0

Acknowledgment

Name of Customer：

Model： XW-01

B&T Material No.:

Configuration： XW-01 802.11 b/g/n Wi-Fi Module

Factory seal:

Edit	Modify	Approve
Yiji Xie		

Customer acknowledges signature：

Check	Verify	Approve

Contact information：

Shenzhen R&D Add：408-410, Block C, Huafeng Smart Innovation Port, Gushu 2nd Road, Xixiang, Baoan District, Shenzhen Factory Add：Floor 2-4, Building A, Dongfang Industrial Park, No.6 Industrial Zone, Dache Village, Nanlang Town, Zhongshan City Tel：0755-29162996、0760-88580932 Fax：0760-89961414 Web：http://www.tech-now.com		
Salesman：	Mob：	Email：
Technician：	Mob：	Email：
QC ：	Mob：	Email：

SPECIFICATION

XW-01 802.11 b/g/n Wi-Fi Module

XW-01

Version: V1.0

Disclaimer and copyright notice

The information in this article, including the URL for reference, is subject to change without notice.
The document is provided "as is" without any guarantee responsibility, including any guarantee of marketability, suitability for a specific purpose or non-infringement, and any guarantee mentioned elsewhere in any proposal, specification or sample. This document assumes no responsibility, including any liability for infringement of any patent rights arising from the use of the information in this document. This document does not grant any license to use intellectual property rights, whether express or implied, by estoppel or other means.
The test data obtained in this article are all obtained by Boantong laboratory test, the actual results may be slightly different.
The Wi-Fi Alliance member logo is owned by the Wi-Fi Alliance.
All trademark names, trademarks and registered trademarks mentioned in this article are the property of their respective owners and are hereby declared.
Shenzhen Boantong Technology Co., Ltd. owns the final interpretation right.

Notice

The contents of this manual may change due to product version upgrade or other reasons. Shenzhen Boantong Technology Co., Ltd. reserves the right to modify the contents of this manual without any notice or prompt. This manual is only used as a guide. Shenzhen Boantong Technology Co., Ltd. makes every effort to provide accurate information in this manual, but Shenzhen Boantong Technology Co., Ltd. does not ensure that the content of the manual is completely error-free. All statements, information and suggestions do not constitute any express or implied guarantee.

Formulation/Revision/Abolition of CV

Version	Date	Formulation/Revision	Make	Verify
V1.0	2020.04.20	First formulated	Yiji Xie	

Content

1.PRODUCT DESCRIPTION.....VI
2.ELECTRICAL PARAMETER.....IX
3.DIMENSION.....XI
4.PIN DEFINITION.....XII
5.SCHEMATIC DIAGRAM.....XIV
6.DESIGN GUIDE.....XV
7.PACKAGING.....XVII

1.PRODUCT DESCRIPTION

XW-01 WiFi module is developed by Ensink Technology, XW-01 is a highly integrated Wi-Fi module, the main chip XR808CT0 is a highly integrated single-chip WiFi microcontroller, which integrates 160MHZ high frequency The ARM Cortex-M4F core integrates a low-power 802.11b/g/n wireless network system and a low-power power management unit. Its main application areas include electrical lighting, smart appliances, and smart home.

XW-01 provides 1Kbit eFuse, more SRAM, supports safe boot, hardware supports encryption algorithms, more GPIO interfaces, supports hardware PWM, provides more stable and reliable pulses, mainly in the field of low power consumption, fast sleep wake-up, suitable for sensors, Solutions for low-power industries such as door locks.

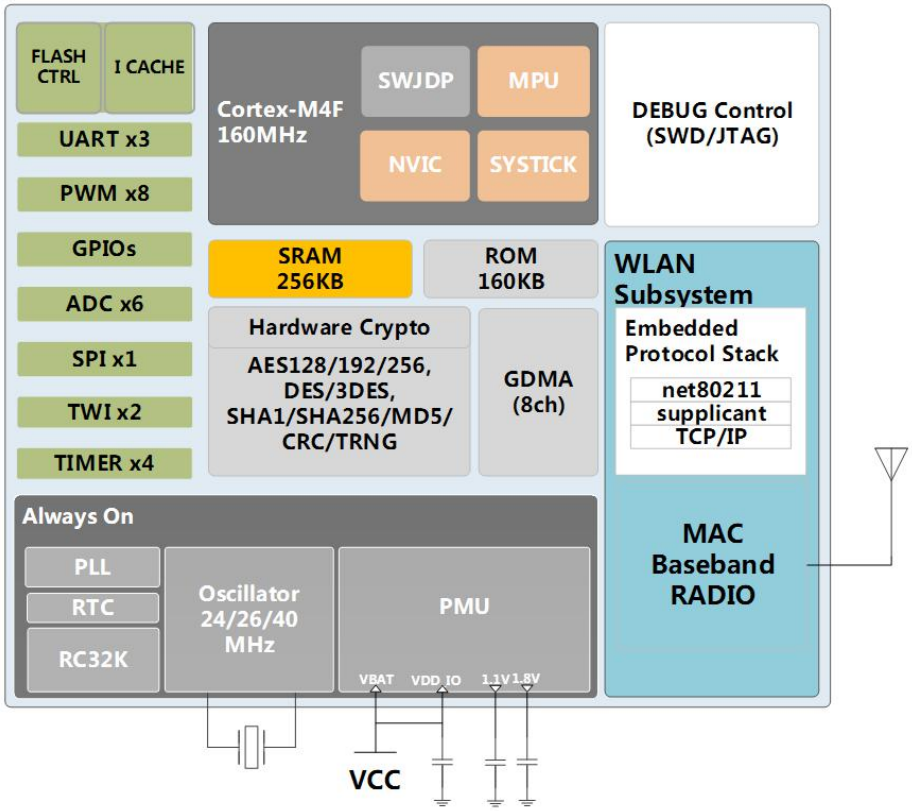

XW-01 unique low-power sleep + cold start mode: refers to the network process from the chip reset state cold start to the connection has been configured, mainly used to meet the application of ultra-low power standby and fast networking needs, within 150ms ~ 180ms Complete network configuration in intervals.

Features

- Support 802.11b/g/n，2400 ~ 2483.5MHz
- Low power consumption, suitable for occasions with strict power consumption requirements
- Support interface type：UART/GPIO/PWM/ADC/I2C
- Cold-start fast-link, only 150ms-200ms (actual measurement) to wake up to the network, making the total power consumption lower
- Support STA/AP/STA+AP work mode
- On-chip resources are relatively rich, supporting secure boot and hardware encryption algorithms
- Support docking with Aliyun Feiyan platform to quickly realize product-side management and control
- General AT command can be used quickly

Major parameter

List 1 Major parameter description

Model	XW-01
Packaging	SMD-22
Size	24*16*3(±0.2)MM
Antenna	PCB/IPEX antenna
Spectrum range	2400 ~ 2483.5MHz
Working temperature	-40 ℃ ~ 85 ℃
Store environment	-40 ℃ ~ 125 ℃ , < 90%RH
Power supply	Voltage 3.0V ~ 3.6V，current >500mA
Interface	UART/GPIO/PWM/ADC/I2C

2.ELECTRICAL PARAMETER

Electrical characteristic

XW-01 series modules are electrostatic sensitive devices, and special precautions need to be taken during handling

Condition	Min	Typical	Max	Unit
DC 3.3V（With internal voltage regulator and integrated CMOS PA）			450	mA
DC_IO（Including VDD_IO）			200	mA
DC_IO_33（3.3V I / O rated current）			50	mA
Static Protection（VESD）			2000	V

Reminder：

The XW-01 module is an electrostatic sensitive device (ESD) and requires special ESD precautions. It should generally be applied to ESD sensitive components. The correct ESD handling and packaging procedures must be used throughout the handling, handling, transportation, and operation of any application incorporating the XW-01 module. Do not touch the module with your hands or use a non-antistatic soldering iron for soldering to avoid damaging the module.

RF performance

Description	Typical	Unit
Work frequency	2400 ~ 2483.5	MHz
Output power		
In 11n mode，PA output power is	15±2	dBm
In 11g mode，PA output power is	16±2	dBm

In 11b mode，PA output power is	18±2	dBm
Receiving sensitivity		
CCK, 1 Mbps	＜＝-97	dBm
CCK, 11 Mbps	＜＝-90	dBm
6 Mbps (1/2 BPSK)	＜＝-93	dBm
54 Mbps (3/4 64-QAM)	＜＝-74	dBm
HT20 (MCS7)	＜＝-70	dBm

Power consumption

The following power consumption data is based on a 3.3V power supply, an ambient temperature of 25°C, and is measured using an internal voltage regulator.

- All measurements are done at the antenna interface without SAW filter.
- All launch data is based on a 90% duty cycle, measured in continuous launch mode.

Mode	Min	Typical	Min	Unit
Full load current	-	185	-	mA
Sleep	-	20	-	mA
Standby	-	102.2	-	μA
Hibernation	-	4.6	-	μA
Power Off	-	4.5	-	μA

3.DIMENSION

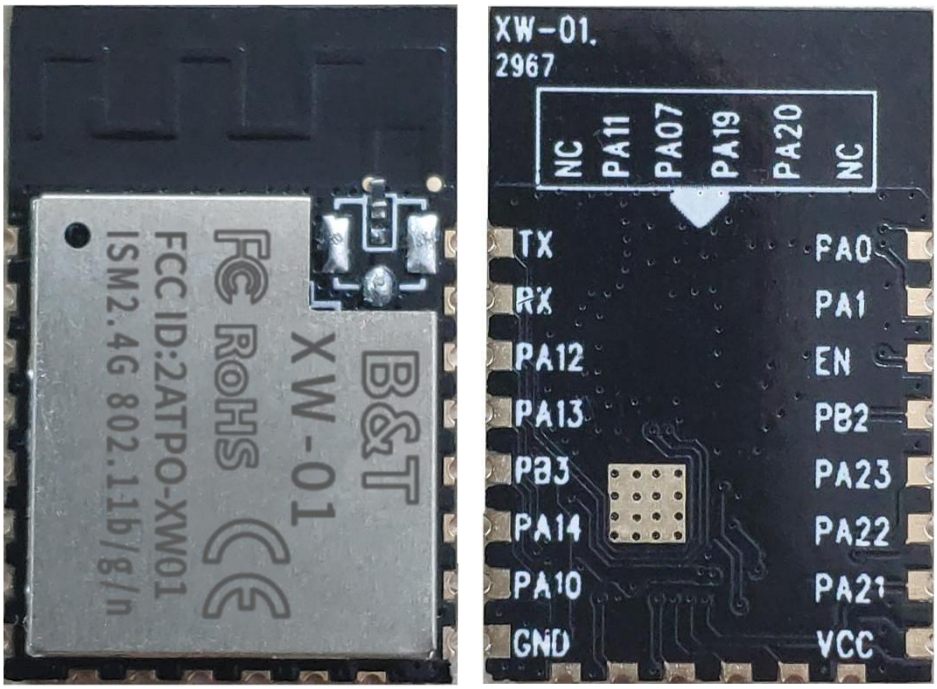
B&T
XW-01
FCC ID:2ATPO-XW01
ISM2.4G 802.11b/g/n
XW-01.
2967
NC
PA11
PA07
PA19
PA20
NC
TX
RX
PA12
PA13
PB3
PA14
PA10
GND
PA0
PA1
EN
PB2
PA23
PA22
PA21
VCC

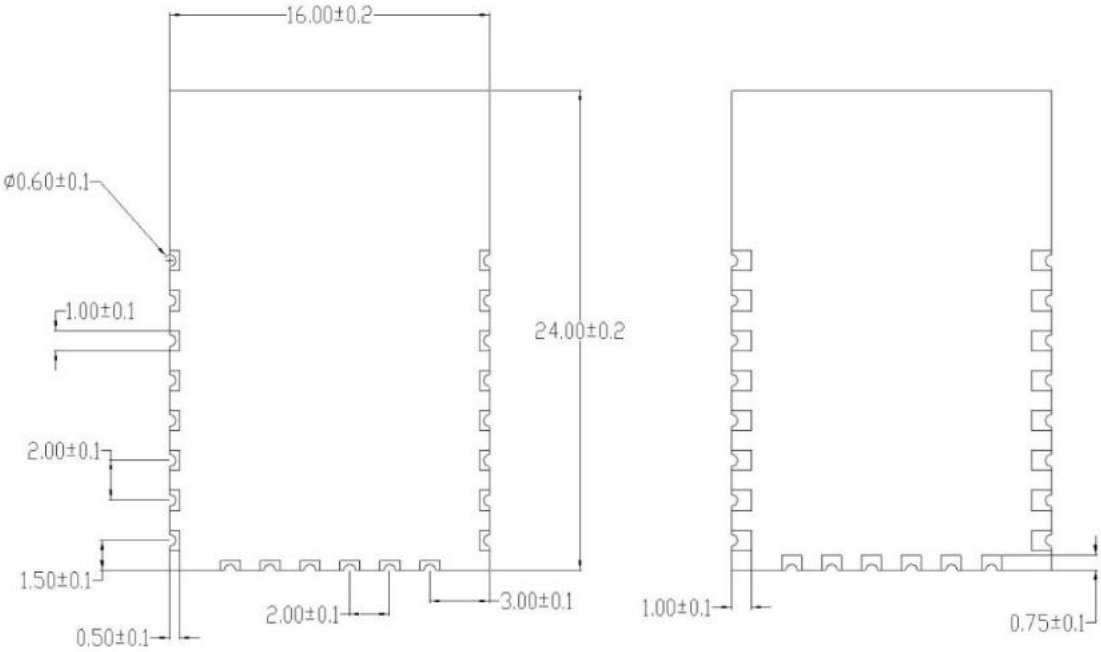
16.00±0.2
ø0.60±0.1
1.00±0.1
24.00±0.2
2.00±0.1
1.50±0.1
0.50±0.1
2.00±0.1
3.00±0.1
1.00±0.1
0.75±0.1

4.PIN DEFINITION

The XW-01 module has 22 interfaces in total, as shown in the pin diagram, the pin function definition table is the interface definition.

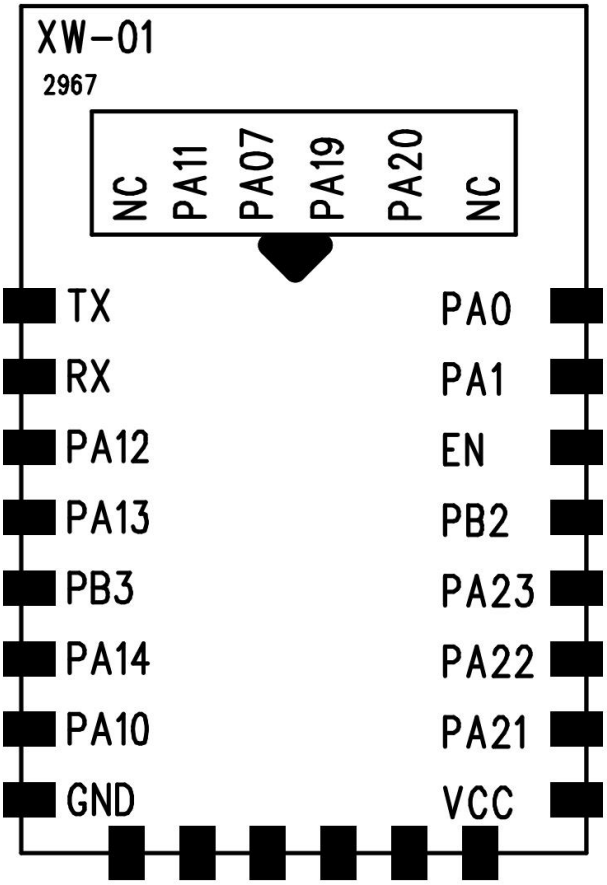

XW-01 PIN definition diagram

PIN function

No.	Name	Function description
1	TX	UART_TX
2	RX	UART_RX
3	PA12	GPIO 12/gpadc input
4	PA13	GPIO 13/gpadc input
5	PB2	GPIO 2
6	PA14	GPIO 14/gpadc input
7	PA10	GPIO 10/gpadc input

8	GND	Ground
9	NC	Unconnected
10	PA11	GPIO 11/gpadc input
11	PA07	GPIO 7
12	PA19	GPIO 19/ wake up IO pin
13	PA20	GPIO 20/ wake up IO pin
14	NC	Unconnected
15	PA0	GPIO 0
16	PA1	GPIO 1
17	EN	Power enable pin
18	PB3	GPIO 3
19	PA23	GPIO 23/ Test strip pin / wake-up IO pin
20	PA22	GPIO 22/ wake up IO pin
21	PA21	GPIO 21/ wake up IO pin
22	VCC	Power

5.SCHEMATIC DIAGRAM

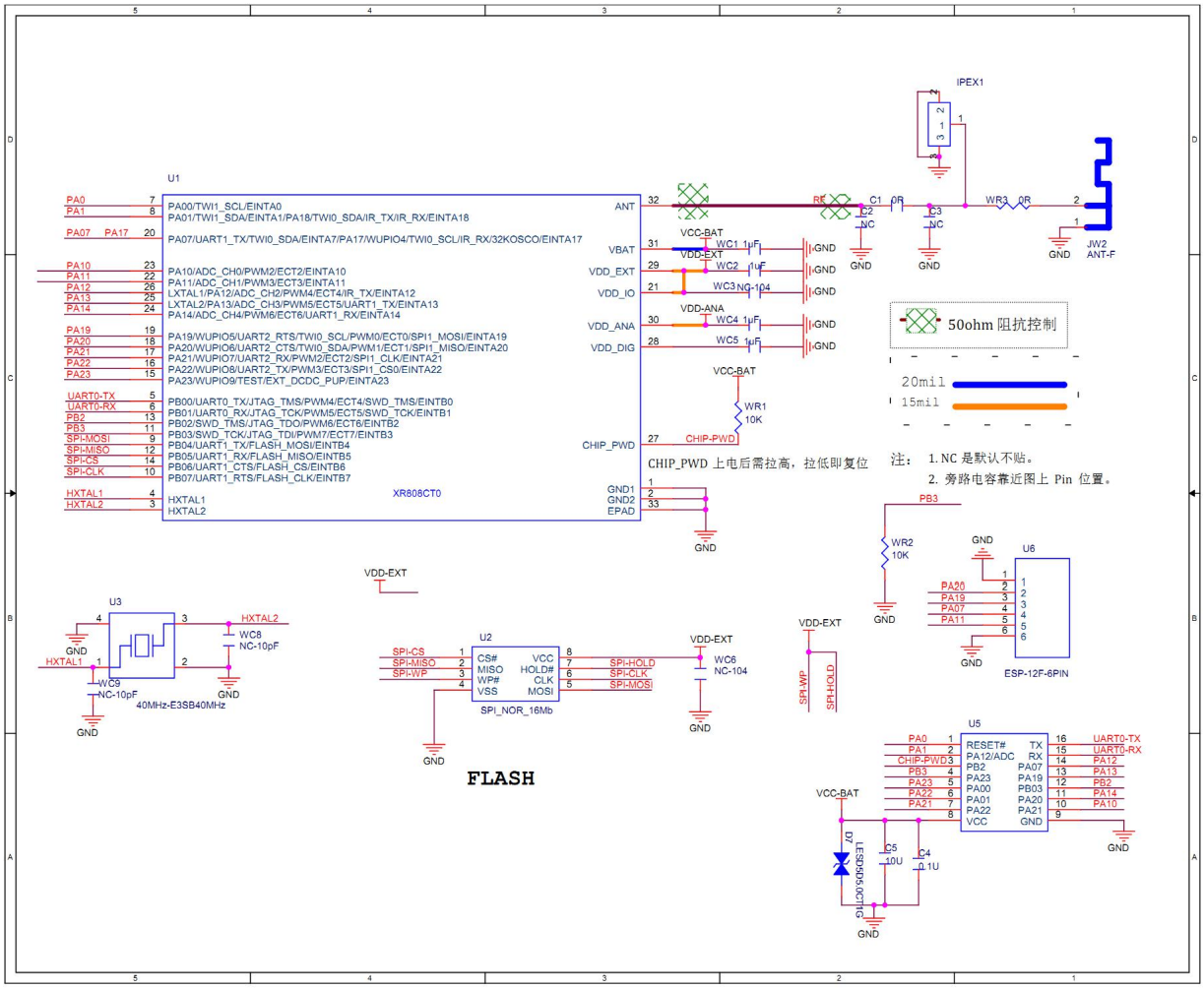

6.DESIGN GUIDE

1、Application circuit

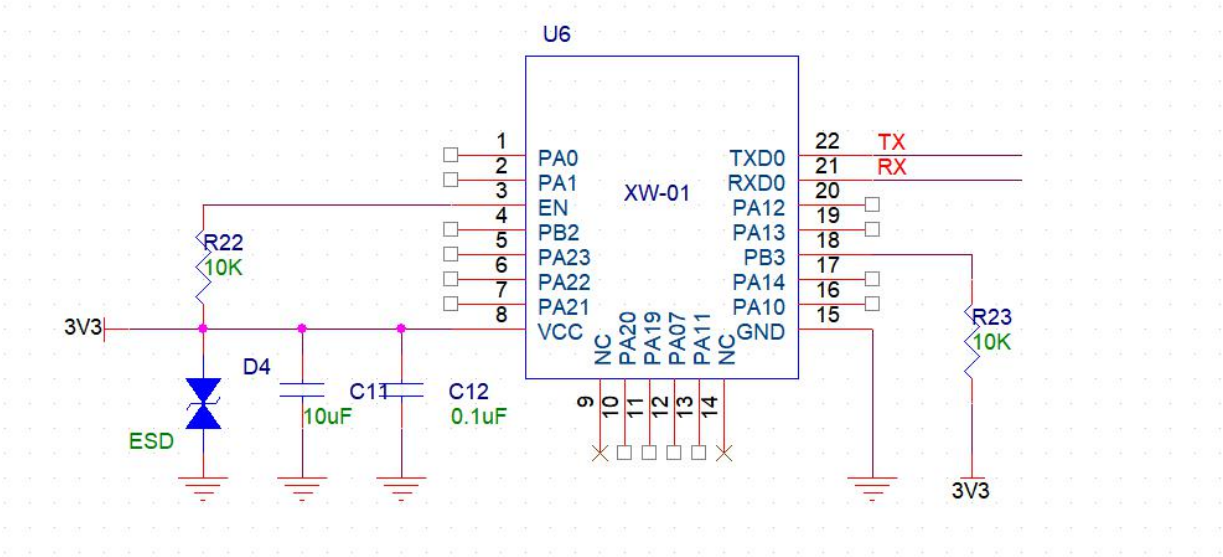

2、Antenna layout requirements

(1) The following two methods are recommended for the installation location on the motherboard:

Option 1: Place the module on the edge of the main board, and the antenna area extends out of the edge of the main board.

Option 2: Place the module on the edge of the motherboard, and the edge of the motherboard digs out an area at the position of the antenna.

(2) In order to meet the performance of the onboard antenna, it is forbidden to place metal parts around the antenna, away from high-frequency devices.

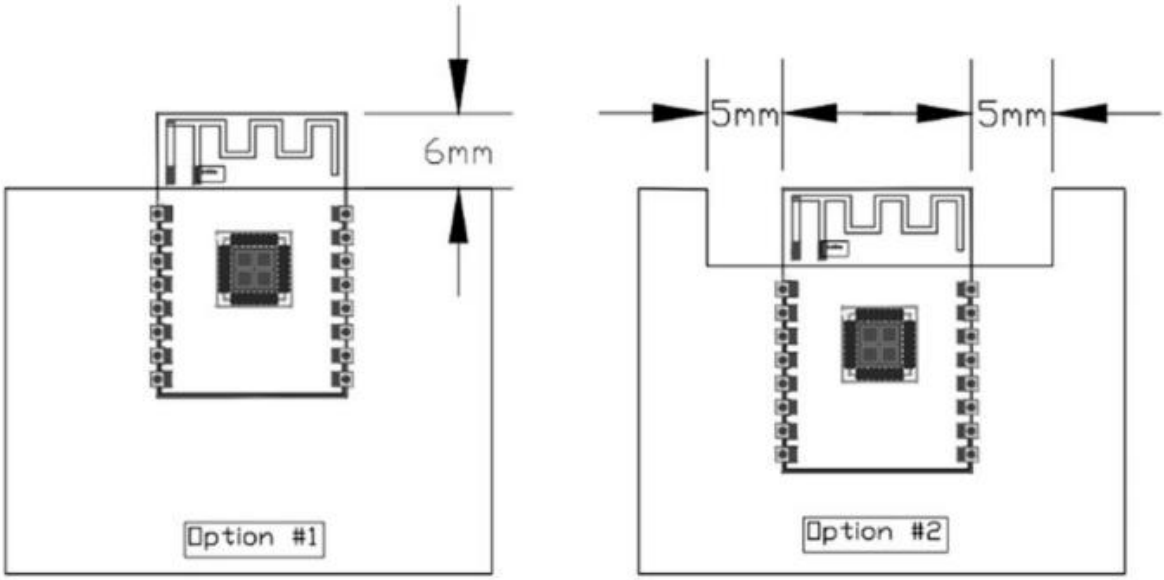

3、Power supply

（1）、Recommended 3.3V voltage, peak current above 500mA

（2）、It is recommended to use LDO power supply; if using DC-DC, it is recommended to control the ripple within 30mV.

（3）、It is recommended to reserve the position of the dynamic response capacitor for the DC-DC power supply circuit, which can optimize the output ripple when the load changes greatly.

（4）、3.3V power interface is recommended to add ESD devices.

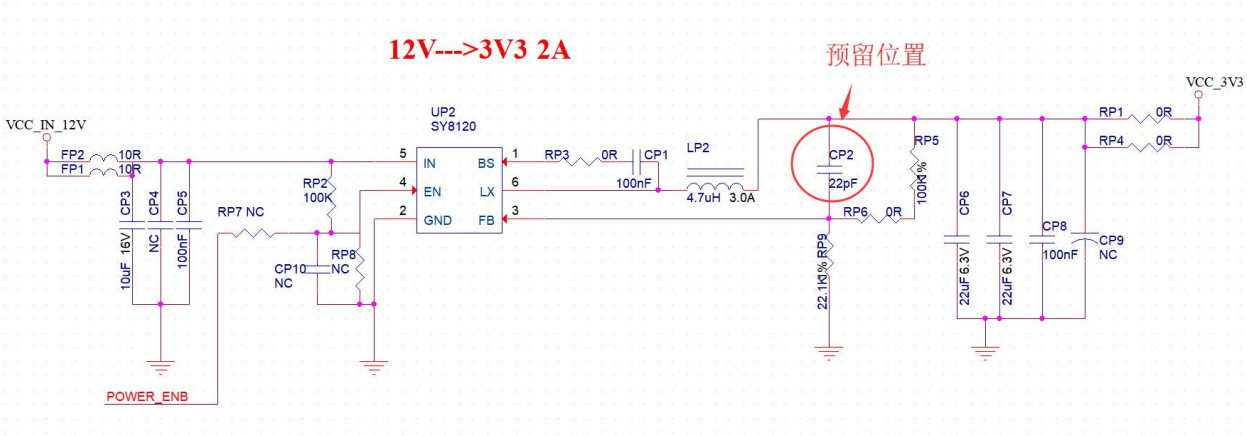

4、USE of GPIO

(1) Some GPIO ports are led out of the periphery of the module. If you need to use a 10-100 ohm resistor in series with the IO port is recommended. This can suppress overshoot, and the level on both sides is more stable. Help both EMI and ESD.

(2) For the up and down of the special IO port, please refer to the instruction manual of the specification, which will affect the startup configuration of the module.

(3) The IO port of the module is 3.3V. If the IO level of the main control and the module does not match, a level conversion circuit needs to be added.

(4) If the IO port is directly connected to the peripheral interface, or the pin header and other terminals, it is recommended to reserve ESD devices near the terminal of the IO trace.

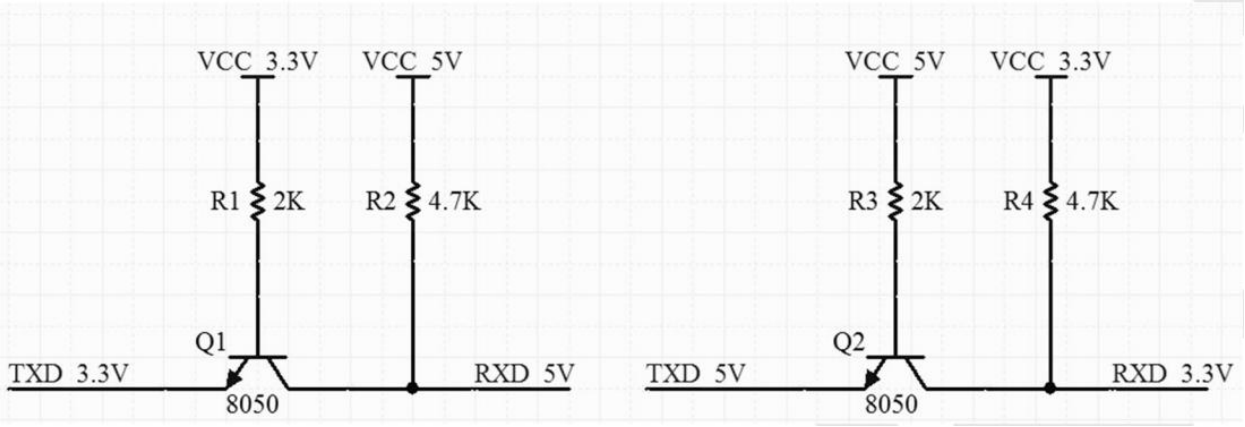

Pic Level shift circuit

7.PACKAGING

As shown below, the packaging of XW-01 is taping.

Integration instructions for host product manufacturers according to KDB 996369 D03 OEM Manual v01

2.2 List of applicable FCC rules

The XW-01 is an Wi-Fi Module with digitally modulated systems using an DSSS with DBPSK/DQPSK/CCK for 802.11b; OFDM with BPSK/QPSK/16QAM/64QAM for 802.11g/n; modulation. It operates on the 2400-2483.5MHz band and, therefore, is within U.S. FCC part 15.247 standard

2.3 Specific operational use conditions

The EUT is a Wi-Fi Module

Operation Frequency: 2412-2462MHz for 802.11b/g/11n(HT20);

Modulation Type: DSSS with DBPSK/DQPSK/CCK for 802.11b;

OFDM with BPSK/QPSK/16QAM/64QAM for 802.11g/n;

Number Of Channel: 11 channels for 802.11b/g/11n(HT20);

Antenna Designation: PCB Antenna

Antenna Gain: 1.1dBi

XW-01 is a Wi-Fi module developed by Shenzhen Ai-Thinker Technology Co., Ltd. The core processor XW-01 of this module is a highly integrated low-power Wi-Fi system-on-chip (SoC) designed for the Internet of Things (IoT) , Mobile devices, wearable electronic devices, smart home and other applications. XW-01 has industry-leading low-power performance and RF performance, supports IEEE802.11b / g / n protocol, integrates Wi-Fi MAC, Wi-Fi RF and baseband, RF switch, RF Balun, power amplifier, low noise Amplifier, etc.

2.4 Limited module procedures

not applicable; Single Modular Approval Request

2.5 Trace antenna designs

Not applicable;

2.6 RF exposure considerations

To maintain compliance with FCC's RF Exposure guidelines, This equipment should be installed and operated with minimum distance 20cm between the radiator and your body: Use only the supplied antenna.

2.7 Antennas

The XW-01 is an Wi-Fi Module beams signals and communicates with its antenna, which is PCB Antenna. The PCB Antenna gain is 1.1dBi. Antenna could not be in no-load state when module is working. During debugging, it is suggested to add 50 ohms load to the antenna port to avoid damage or performance degradation of the module under long-time no-load condition.

2.8 Label and compliance information

The final end product must be label in a visible area with the following

Host must Contains FCC ID: 2ATPO-XW-01. If the size of the end product is larger than 8x10cm, then the following FCC part 15.19 statement has to also be available on the label: This device complies with Part 15 of FCC rules. Operation is subject to the following two conditions:

(1) this device may not cause harmful interference and

(2) this device must accept any interference received, including interference that may cause undesired operation.

2.9 Information on test modes and additional testing requirements

Data transfer module demo board can control the EUT work in RF test mode at specified test channel.

2.10 Additional testing, Part 15 Subpart B disclaimer

The module without unintentional-radiator digital circuit, so the module does not required an evaluation by FCC Part 15 Subpart B. The host should be evaluated by the FCC Subpart B.

ATTENTION

This device is intended only for OEM integrators under the following conditions:

1) The antenna must be installed such that 20 cm is maintained between the antenna and users, and

2) This device and its antenna(s) must not be co‐located with any other transmitters except in accordance with FCC multi‐transmitter product procedures. Referring to the multi‐transmitter policy, multiple transmitter(s) and module(s) can be operated simultaneously without C2P.

3) For all products market in US, OEM has to limit the Operating Frequency: 2412-2462MHz by supplied firmware programming tool. OEM shall not supply any tool or info to the end‐user regarding to Regulatory Domain change.

USERS MANUAL OF THE END PRODUCT:

In the user manual of the end product, the end user has to be informed to keep at least 20cm separation with the antenna while this end product is installed and operated. The end user has to be informed that the FCC radio‐frequency exposure guidelines for an uncontrolled environment can be satisfied. The end user has to also be informed that any changes or modifications not expressly approved by the manufacturer could void the user's authority to operate this equipment.

If the size of the end product is smaller than 8x10cm, then additional FCC part 15.19 statement is required to be available in the users manual: This device complies with Part 15 of FCC rules. Operation is subject to the following two conditions:

(1) this device may not cause harmful interference and

(2) this device must accept any interference received, including interference that may cause undesired operation.

FCC WARNING

This device complies with part 15 of the FCC Rules. Operation is subject to the following two conditions:

Any changes or modifications not expressly approved by the party responsible for compliance could void the user's authority to operate the equipment.

NOTE: This equipment has been tested and found to comply with the limits for a Class B digital device, pursuant to Part 15 of the FCC Rules. These limits are designed to provide reasonable protection against harmful interference in a residential installation. This equipment generate, uses and can radiate radio frequency energy and, if not installed and used in accordance with the instructions, may cause harmful interference to radio communications. However, there is no guarantee that interference will not occur in a particular installation.

If this equipment does cause harmful interference to radio or television reception, which can be determined by turning the equipment off and on, the user is encouraged to try to correct the interference by one or more of the following measures:

-- Reorient or relocate the receiving antenna.

-- Increase the separation between the equipment and receiver.

-- Connect the equipment into an outlet on a circuit different from that to which the receiver is connected.

-- Consult the dealer or an experienced radio/TV technician for help.