3761 S. Hill St. • Los Angeles, CA 90007
P 213 - 261- 4161 • F 213 - 947- 4767

WWW.CERWINVEGAMOBILE.COM

©2019 Cerwin Vega Mobile All rights reserved.
(a division of CV & DA Holdings, Inc.)

We reserve the right to change products and specifications at any time without notice.
Images may or may not include optional equipment.

XED SERIES SOUNDBARS

RPMSB3X/RPMSB4X

10 SPEAKER/6 SPEAKER SOUNDBARS

USERS MANUAL

Introduction

Thank you for purchasing a Cerwin Vega Mobile SoundBar for your audio system. You have chosen Cerwin Vega Mobile because you deserve the best!

Cerwin Vega Mobile SoundBars are designed and engineered to the highest quality standards in the industry to create the ultimate listening experience in your vehicle. For optimal performance of this product, it is highly recommended that you have your new SoundBars installed by an authorized Cerwin Vega Mobile dealer. Our authorized dealers have the necessary experience and installation equipment to ensure that your SoundBar will deliver maximum performance and explain all the details pertaining to our warranty coverage as well.

If you decide to install the SoundBars by yourself, please thoroughly read through this manual before getting started. This manual will help familiarize yourself with these SoundBars and guide you through the installation process and procedures.

Please contact your local authorized Cerwin Vega Mobile dealer if you have any questions regarding the instructions in this manual or the SoundBars operation capabilities. If you require additional assistance, please contact the Cerwin Vega Mobile Technical Support Department during business hours at 213-261-4161.

IN THE BOX

- Universal Bluetooth Sound Bar - RPMSB3X or RPMSB4X
- Installation Cables (Power/Ground/Accessory)
- Universal Mounting Clamps
- Long Bolts for Golf Cart "Tube" mounting

FEATURES

- Six 3" Full Range Speakers and Two 1" High Frequency Tweeters (RPMSB3X)
- Four 4" Full Range Speakers and Two 1" High Frequency Tweeters (RPMSB4X)
- All-Weather Construction for Use In Almost Any Environment
- Integrated Bluetooth Receiver
- Auxiliary Input for Connecting Devices Via 3.5mm Cable
- Auxiliary Output for Connecting An External Amplifier or Additional Sound Bar
- Mounting Clamps Fit 1.75" and 2" Bars
- Long Bolts for Golf Cart "Tube" mounting
- Power, Ground, and Accessory Wire Included For Easy Installation

We reserve the right to change products and specifications at any time without notice.
Images may or may not include optional equipment.

Warranty

Thank you for purchasing a Cerwin Vega Mobile product and we hope to provide you with countless hours of listening enjoyment.

Please take a brief moment to register your new product. By registering your new product, you will receive benefits such as:

- Important product notifications that may pertain to your purchase.
- Confirmation and record of ownership in case of loss or theft.
- Knowledgeable customer service and technical assistance pertaining to your product.

Register your new product by completely filling out this Product and Warranty Registration card or register online at www.cerwinvegamobile.com.

Registration is voluntary and failure to register will not diminish your limited warranty rights.

Limited Warranty (U.S.A.)
Cerwin Vega Mobile warrants all of our amplifiers and speakers to be free of defects in materials and workmanship for a period of one (1) year.

This warranty is non-transferable and applies only to the original purchaser from an authorized Cerwin Vega Mobile dealer. If service is required and necessary under this warranty due to manufacturing defect or malfunction, then Cerwin Vega Mobile will repair and/or replace defective product with either new or remanufactured like product at no charge at our discretion.

Damage to product caused by the following will not be covered under this warranty: abuse, accident, misuse, neglect, modifications, repairing attempts, seller/installer misrepresentation.

This warranty does not cover any incidental, consequential, or cosmetic damage due to accidents or normal wear and tear, nor does it cover the cost of removing or reinstallation of the product.

Warranty is void if the product's serial number has been removed, defaced, and/or tampered with.

Warranty Procedure:
We recommend that you contact your Cerwin Vega Mobile authorized dealer where your original purchase was made to initiate all warranty claims. Our authorized dealers can guide you through the warranty procedure to ensure that your claim will be processed in a timely manner. All warranty returns must be accompanied with a proof of purchase (a copy of the original sales receipt) and be shipped freight prepaid to our facility with an RA (Return Authorization) number clearly marked on the outside of the package. Direct returns from consumers or non-authorized dealers will be refused if shipped without a valid RA number authorized by Cerwin Vega Mobile beforehand.

INTERNATIONAL
Products purchased outside of the U.S.A. are covered only by that country's distributor and not by Cerwin Vega Mobile U.S.A.

Please Ship All Warranty Claims With Pre-Authorized RA Number To:
CV&DA Holdings, Inc.
ATTN: Customer Service Department
3761 S. Hill St.
Los Angeles, CA 90007 USA

Please Contact Customer Service for Further Warranty Information:
U.S.A.
Tel: 213-261-4161 / Fax: 213-947-4767

We reserve the right to change products and specifications at any time without notice.
Images may or may not include optional equipment.

PRODUCT SPECIFICATIONS

	RPMSB3X	RPMSB4X
RMS Power Rating (rated at 0.1% THD)		
Max Power	400 W MAX	800 W MAX
RMS Power (4 Ω)	100 W	200 W RMS
Driver Compliment		
	4 - 4" Mid Woofer 2 - 1" Titanium dome neodymium tweeter	6 - 3" Mid Woofer 2 - 1" Titanium dome neodymium tweeter
Type		
Topology	Full Range Class D	Full Range Class D
Power Supply		
Power Supply	Full PWM	Full PWM
Power Supply (Threshold) Idle Current	10.0VDC - 17.0VDC (0.7A)	10.0VDC - 17.0VDC (0.7A)
Distortion		
THD (1KHz @4Ω)	0.1%	0.1%
S/N Ratio (A weighted @1W)	-85dBA	–90dBA
S/N Ratio (A weighted @ FP)	-101.1dBA	-101.1dBA
Input Sensitivity		
Hi/Low Input Level	0.15V - 12.0V	0.15V - 12.0V
Input Impedance		
Low Input Level	20 KΩ	20 KΩ
Frequency Response		
Bandwidth (+/-3dB)	70Hz-20KHz	10Hz-20KHz
Crossover (-12dB/Oct)		
High-Pass	4,500Hz	4,500Hz
Inputs		
	Bluetooth and AUX	Bluetooth and AUX
Fuse Ratings		
ATC FUSE	20A	30A
Dimensions:		
Lenght (inches/mm)	24"/627m	34"/866m
Height (inches/mm)	4.1"/104.4m	3.8"/96.8m
Depth (inches/mm)	4.46"/ 113mm	3.87"/ 198.5mm
Over All Height (inches/mm)	6.96"/ 177mm	6.46"/ 164.2mm

1. If installing on an electric vehicle,switch it into TOW mode. Carefully remove the Positive (+) then Negative (-) battery wires.
2. If installing on a gas vehicle,wire the Negative (Black) wire to the Negative (-) battery terminal and the Positive (Red) wire to the Positive (+) battery terminal.

CERWIN VEGA MOBILE SOUNDBAR

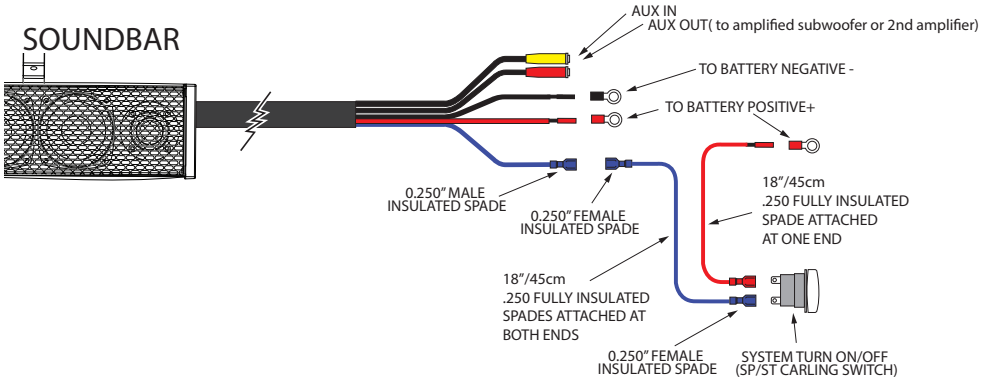

3. Route the thick Blue Aux In & Aux Out wires to your desired location. The Aux In is for a music source that does not have Bluetooth capability. The Aux Out is to connect to an optional amplifer or amplified subwoofer.
4. The Blue Remote Out wire provides +12V when the soundbar is powered on. This may be used as a turn on (+12V) signal for additional amplifiers or an optional amplified subwoofer.
5. Tie up all excess wires and reinstall the Positive (+) then Negative (-) battery wires. If installing on an electric vehicle, switch it back into RUN mode.

Note: DC-DC Converter is required on electric vehicles to avoid damage to the accessory and the vehicle

Features/Functions

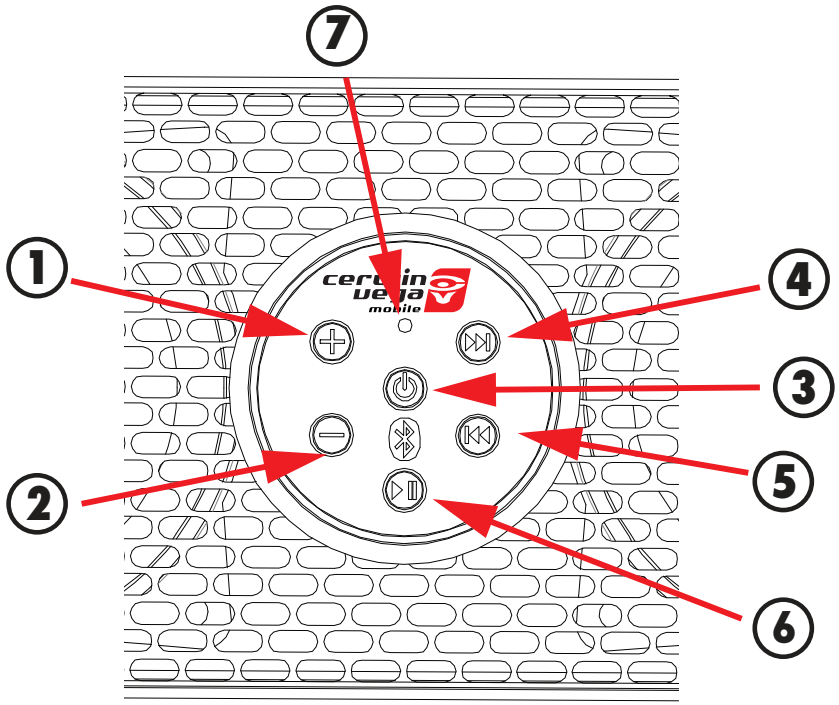

① **Volume Up - Turns the Volume UP**

② **Volume Down - Turns the Volume DOWN**

③ **Power – Play/Pause – Mute**
- **Press and Hold For 3-5 Seconds to turn the unit on or off**

④ **Song choice - Select NEXT song FORWARD**
- Select NEXT song FORWARD

⑤ **Song choice**
- Select NEXT song BACKWARD

⑥ **Play / Pause button**
- Play songs/Suspend the songs

⑦ **Indicator Light**
- Blinking Blue – Pairing Mode
- Blue – Bluetooth
- No Light – Aux

Set up/Operation

1. Tap the Power button to turn the unit on. (Power, Ground, and ACC wire need to be connected to a 12V power source.)
2. Tap the Power button to switch modes between Bluetooth and AUX.
3. Hold the Power button for 2 seconds to turn the unit Off. Note: The buttons will stay illuminatedas long as the ACC wire has 12V applied to it.
4. The included fuse loop, ring terminals, and butt connector allow for easy wire connection to a 12V power source.

   Note: The indicator light will illuminate Blue when in Bluetooth mode and Green when in AUX mode.

OPERATION

Follow these steps to use Bluetooth functionality with a Bluetooth enabled device:

1. Power the unit On by tapping the Power button once.
2. Select Bluetooth by tapping the Power button until it blinks Blue.
3. Select "RPMSB" from the menu on your Bluetooth enabled device. The unit will power on in Bluetooth mode first when it is turned on by tapping. If the accessory wire is disconnected, (vehicle is turned off and then turned on) the unit will revert back to the previous Bluetooth or AUX setting.
4. Choose "Pair" when prompted.
5. Once "Paired" the unit will be able to play audio from your Bluetooth device. The front panel control buttons will control track forward/back and volume up/down in this mode. The Play/Pause button will mute the output and the LED indicator will blink Blue when in Mute mode..

Follow these steps to utilize an Auxiliary input device:

1. Power the unit On by tapping the Power button once.
2. Select Auxiliary by tapping the Power button until it blinks BLUE.
3. Connect an audio device to the AUX input using the "Yellow" 3.5mm input on the side of the unit.

   The LED will illuminate Yellow, and will blink Yellow when in mute mode.

   The front panel control buttons will adjust the Volume up/down in this mode. The Play/Pause button will mute the audio output and the LED indicator will blink Yellow when in Mute mode.

Using the auxiliary output (black connector).

1. Auxiliary out is a variable output that allows connection to a secondary audio device, whether it is an external amplifier connected to speakers or subwoofer.
2. The RPMSB3X/RPMSB4X can be used with a second RPMSB3X/RPMSB4X unit. For the best audio performance, the second unit connected via Auxiliary should have the volume set to the max.

Controlling the Volume

The LED indicator light will blink in both Bluetooth and AUX modes at max volume.

OVERVIEW OF SOUNDBAR AND THE 2 METHODS OF INSTALLATION

The RPMSB3X/RPMSB4X can be used with any 12-volt system and can be mounted to a variety of bars using the included hardware. The unit has three wires in its wiring pigtail. The red wire, 12V + (or B+), should be directly connected to the vehicles positive battery terminal, the black wire, ground 12V - (or B-), should be connected directly to the vehicle's chassis where paint has been removed or the negative terminal on the battery, and the blue wire, accessory, should be connected to the ignition wire on the vehicle thru the included "Carling" style rocker switch. The unit includes two low clearance brackets that fit 1.75" and 2" bars. The clamps can be used ONLY on the top channel and can be adjusted to fit multiple types of bars including vertical, horizontal, or angled bars allowing for multiple installation options.

Mounting

1. Via Pipe Clamp (Bracket)
2. Via Straight Bolt through Dove Tail "Slide" piece

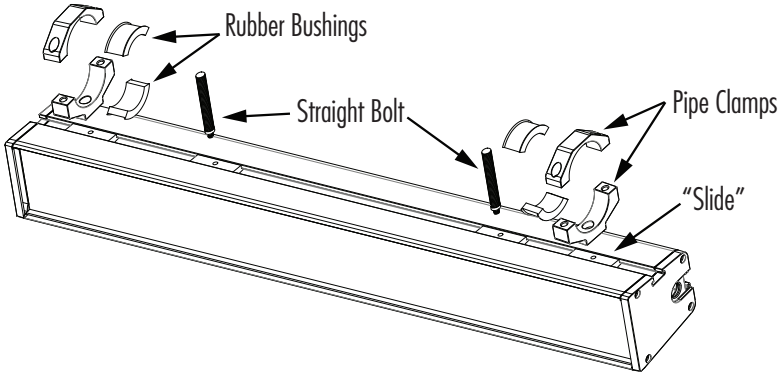

First Method - Mounting via Pipe Clamp (Bracket)

- Take 14 mm bolt with lock washer and place it through bottom of clamp and slightly thread into Dove tailed "Slide" piece. You will need a 5mm Allen to accoomplish this task.
- Slide assembly and lock washer into the recessed "notched" area placing the unit at angle/mounting location to dial in bracket angle and placement.

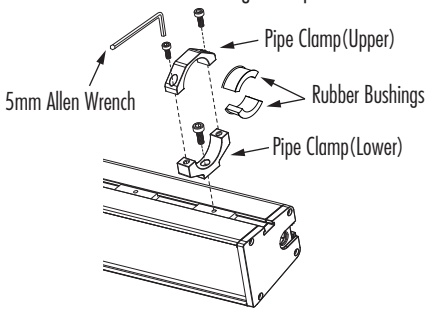

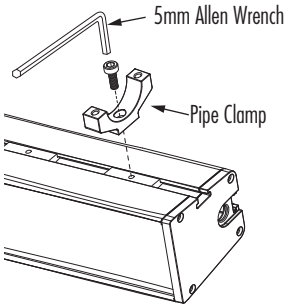

First Method - Mounting via Pipe Clamp (Bracket)

- Tighten bolt down to securely hold bracket in place.
- Do this for both Pipe Clamps as two are included with each speaker bar. NO less that two should be used during installation.
- Place top Pipe Clamp over the bar the unit will be mounted to. Make sure you have chosen the correct rubber bushing for your tube size. Put the rubber bushings above the mounting pipe and below (as shown below)

  Note: Placing the included rubber bushings between the Pipe clamps, above and below, will reduce the possibilty of scratching your UTV bar during installation.
- Place the flange end bolt through the bracket strap and base. Tighten down with the included mounting bolts until the bar is securely locked in place.
- Connect wires to power, ground, and ignition.

PIPE BRACKET MOUNT

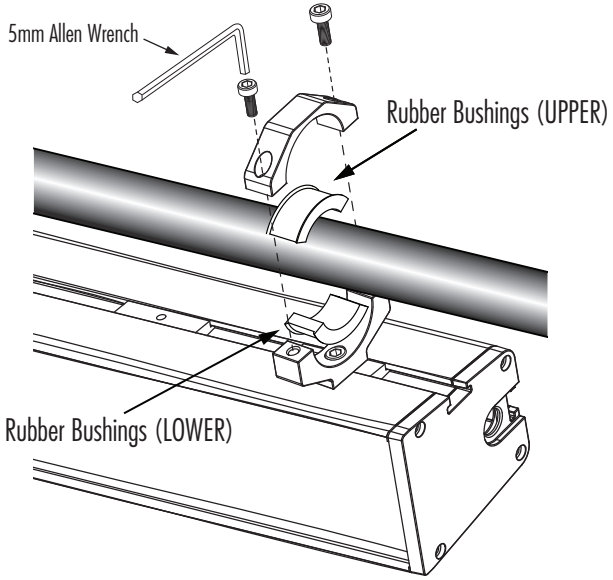

Two rubber bushing sizes are provided. The thinner bushings are for RZR vehicles with 1.75 inch ROPS tubing. The thicker bushings are for ACE and ATV vehicles with 1.5 inch tubing.

Second Method - Mounting via Threaded Bolts (this would be for Golf Cart typically)

1. Included are two threaded bolts that fit into the "Slide" .
2. Slide the dove tail aluminum part with bolts into the recessed "notched" area.
3. Spread bolts with slide into the desired location where the unit is to be tightened down.
4. Measure the dimension between the bolts. Use this as the hole line up
5. Drill 7/16" holes into the tube cage to put the bolts thru
6. Lift soundbar with the bolts secured into the slide and press the bolts thru your drilled mounting holes
7. Use included Steel washer, rubber washers and Stainless nuts to secure into place as shown below.
8. Tighten nuts so unit is secure. You may want to use "Loctite" to secure these nuts
9. Connect wires to power, ground, and ignition (See Wiring/Connection Pg 3)

GOLF CART MOUNT

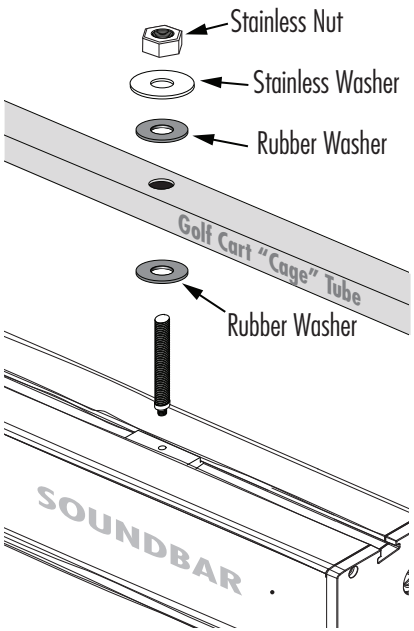

RPMSB4X

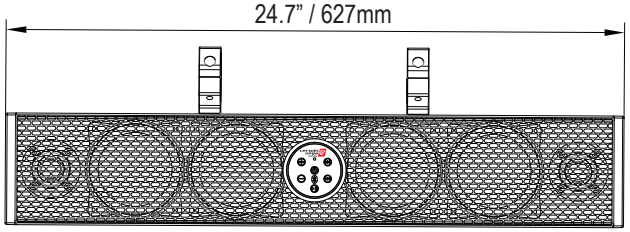

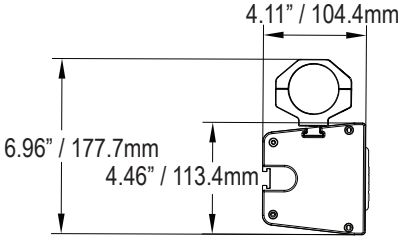

RPMSB3X

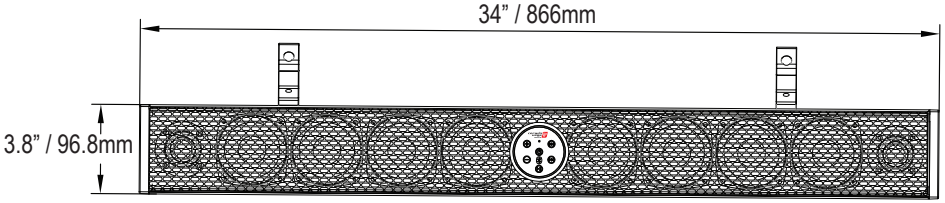

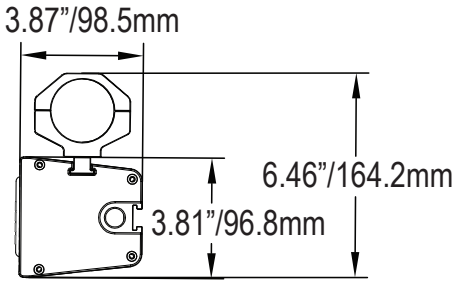

FCC Statement:
This device complies with part 15 of the FCC Rules. Operation is subject to the following
two conditions: (1) This device may not cause harmful interference, and (2) this device
must accept any interference received, including interference that may cause undesired
operation.
This equipment has been tested and found to comply with the limits for a Class B digital
device, pursuant to part 15 of the FCC Rules. These limits are designed to provide reasonable protection against harmful interference in a residential installation. This equipment generates, uses and can radiate radio frequency energy and, if not installed and used in accordance with the instructions, may cause harmful interference to radio communications. However, there is no guarantee that interference will not occur in a particular installation. If this equipment does cause harmful interference to radio or television reception, which can be determined by turning the equipment off and on, the
user is encouraged to try to correct the interference by one or more of the following measures:
—Reorient or relocate the receiving antenna.
—Increase the separation between the equipment and receiver.
—Connect the equipment into an outlet on a circuit different from that to which the receiver is connected.
—Consult the dealer or an experienced radio/TV technician for help.
Caution: Any changes or modifications not expressly approved by the party responsible
for compliance could void the user's authority to operate the equipment.
This equipment complies with FCC radiation exposure limits set forth for an uncontrolled environment. This transmitter must not be co-located or operating in conjunction with any other antenna or transmitter.