alcove™

Owner's Manual
Robotic Vacuum

Important Use, Care, & Safety Information

HOUSEHOLD USE ONLY

Model# NPVWM

Made in China

Table of Contents

Welcome----------01

Important Safety Instructions----------02

Product and Accessories----------03

About the Robot----------04

Function----------05
Smart System
Cleaning System

Get Started----------08
Remove the Protective Packaging
Install and Charge the Battery
Install the Recharging Base

How to Use the Robot----------10
The Robot
Remote Control
How to Start Cleaning
Time Setting and Schedule Cleaning
How to Pair the Device
Tips before Using the Robot

Robot Maintenance----------18

Troubleshooting and Error Codes---------21

Specification----------22

WeBack APP instructions ----------23

WELCOME

Dear Valued Customers:

Thank you for choosing our new generation robotic vacuum cleaner.

As smart home appliances have entered millions of homes in the world, it is wise to choose the best smart home appliances to enjoy the comfort and ease of our lives.

For the best performance of this product, please kindly read through this manual carefully before using this product.

Important Safety Instructions

⚠ Please read the following safety and operation instructions thoroughly before using this robot.
Please keep this manual for future reference.

⚠ To avoid electric shock, do not expose the electronics of your robot, and use indoors in a dry location only.

Prohibition

01. Children under the age of 8 or persons with reduced physical, sensory or mental capabilities should not use this robot without the supervision of parents or others.
02. Do not disassemble, fix, or remodel any part of this robot.
03. Never touch the battery charger pod with any metal or electricity-conducted material.
04. Never touch the robot and any other parts with wet hands, including the battery charger, power plug and power cord.
05. Avoid putting heavy items onto the power cord which might damage it.
06. Do not leave the robot outdoors.
07. Do not use this robot near any possible hazardous or explosive places.
08. Do not stand on the robot.
09. ONLY use attachments, accessories, and spare parts authorized by the manufacturer.
10. Do not use this robot in the places near any volatile materials.
11. Do not use the robot in a moist or wet environment.
12. Do not spray or pour liquids on your robot.
13. Do not expose it to direct sunlight, use in a room temperature environment only.
14. Do not use the robot to pick up sharp objects, glass, or anything that is burning or smoking.
15. Do not use this device to pick up spills of water bleach, paint, or anything wet.
16. It's not recommended to use the robot on long-pile carpet which may cause it to get stuck.
17. Be aware of the robot while it's working, be careful not to step on it.
18. Do not use the recharging base, power cord, or plug if they're damaged. They must be replaced.
19. Do not heat up the battery or immerse the battery pack in any liquid.
    Do not crush the battery.

Caution

- Before using the robot, it is recommended to clean up clothing, papers, plastic bags, pet hair, toys and fragile objects on the ground.
- Tidy up small items, such as power cords, cables, and loose fringes of rugs to prevent any possibility of getting stuck.
- Tidy up long-sagged curtains.

Caution Notice (Battery):

- Check the battery pack for any sign of damage or leakage. Do not charge damaged or leaking battery packs in case of fire or explosion.
- If the robot won't be used for a long period of time, unplug the power cord and remove the battery from the robot then store it in a cool, dry place.
- Wrap the contact points before recycling or discarding the battery.
- If the skin or eyes is exposed to the leakage of the battery, wash the affected area with large amounts of water and seek medical advice.
- When the battery is obsolete, do not discard it to the garbage bin which could cause environmental pollution. You may send it back to your local recycle center, repair center, or assigned agents for disposal.

Product and Accessories

01.The Robot

02. Recharging Base

03. User Manual

04. Remote Control

05. Cleaning Brush

06. Adaptor

07. Battery

08. Side Brush and HEPA Filter

09. Hair Removal Tool

01

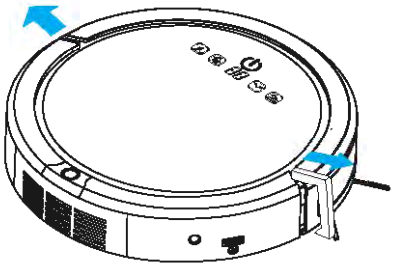

※ Remove the protective strip

02

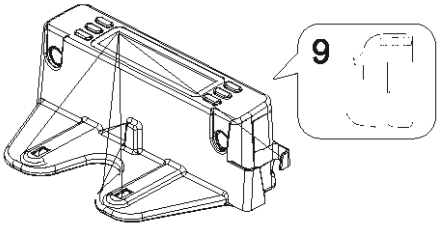

03

04

05

(Inside the robot)

06

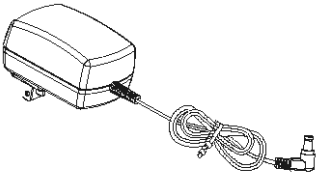

07

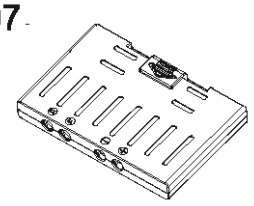

08

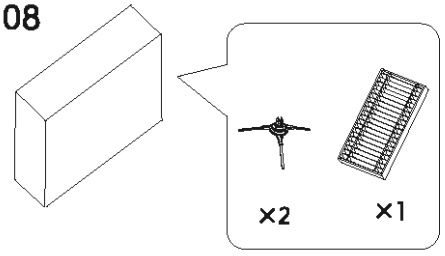

09

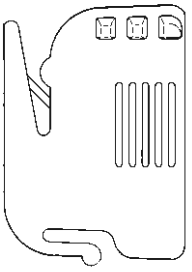

About the Robot

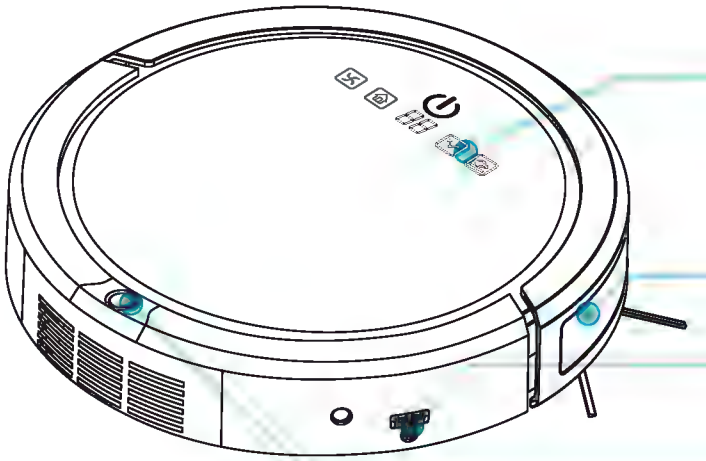

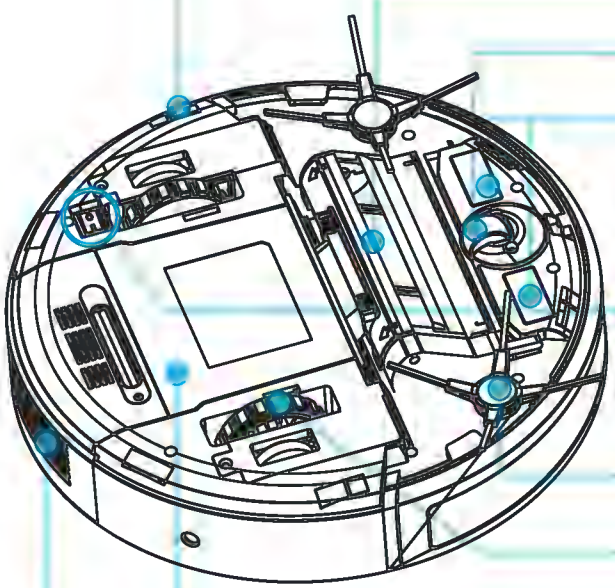

Smart System

Auto Recharge

When the battery is lower than 25-30%, the robot will come back to its Recharging Base to recharge.

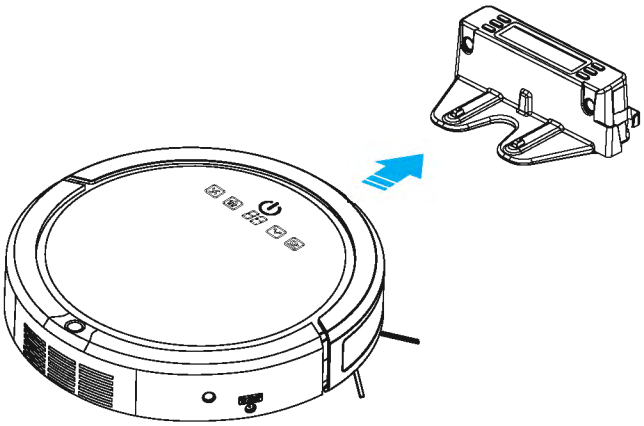

Anti-Collision

The robot will start cleaning with soft-touch mode enabled, which means it will touch the obstacle gently and then turn away to continue cleaning.

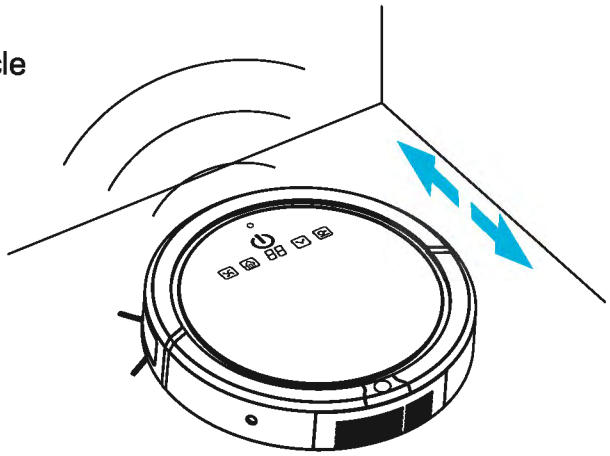

The robot might still bump into some narrow objects like the legs of desk or chair which is hard to detect. Remove fragile objects, especially expensive ceramics or valuables which could fall or break before cleaning.

Anti-Falling

There are Cliff Detect Sensors on the bottom of the robot to prevent the robot from falling down stairs.

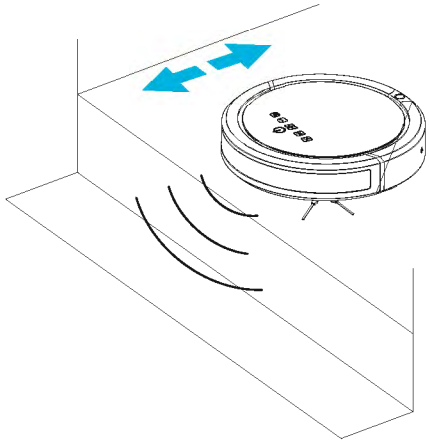

Dirt Detect

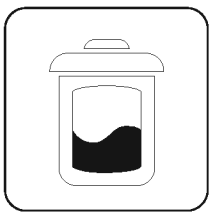

Dustbin Full Detect

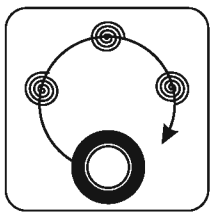

Dirt Detect

The robot will automatically apply extra cleaning on concentrated areas of dirt, such as high-traffic zones of your home.

Cleaning System

Cleaning Modes

The robot will start in Auto Mode and will plan the best cleaning modes combination to ensure thorough cleaning.

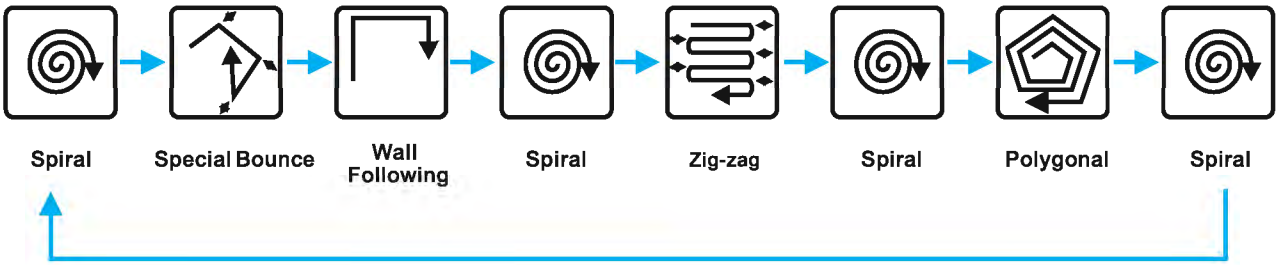

Floating Roller Brush

Combined with our powerful vacuum suction, the roller brush can adapt to all floor types and remove the debris efficiently.

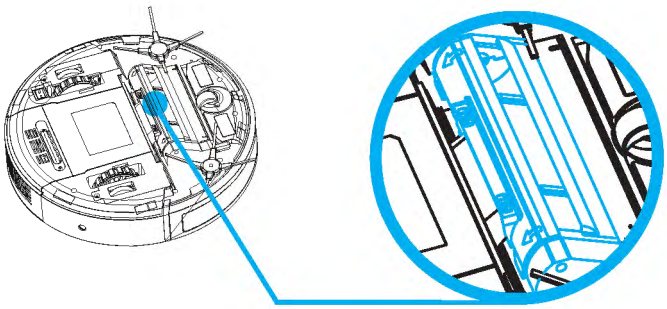

Remove the Protective Packaging

Before using the robot, remember to remove the protective material.

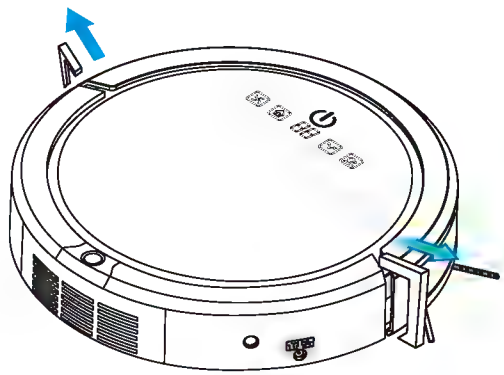

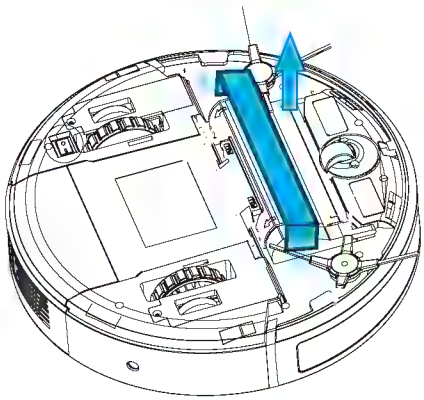

Install the Battery

1. Push the dustbin release button and pull out the dustbin.
2. Flip the robot over, and push the battery into the slot.
3. Push the battery until the hook is completely locked.
4. Flip the robot over again, and insert the dustbin back.

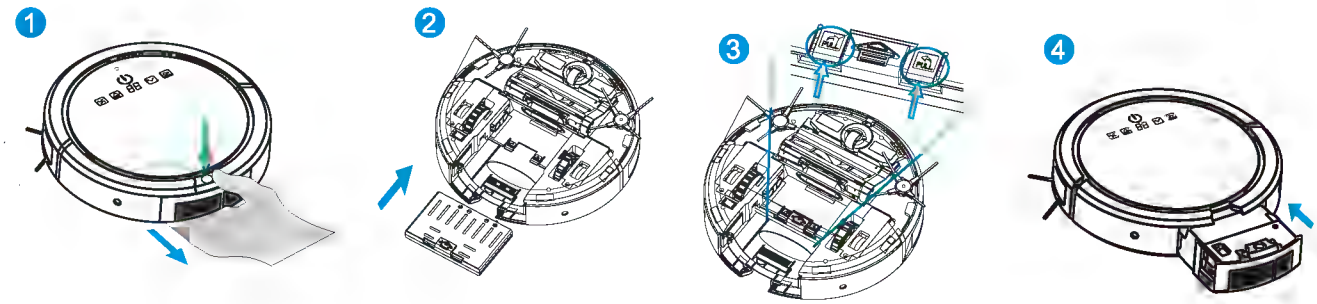

Recharge the Battery

- When the Power Button on the robot blinks red, this indicates that the battery level is low.
- The robot will shut down the vacuum motor and return to the Recharging Base to recharge.
- Users can also use the AC adaptor to plug into the robot directly to recharge the battery.
- When the battery is fully recharged, the Power Button will light up a solid blue.
  The recharging process is about 3.5hr.

Install the Recharging Base

Installation

- The Recharging Base must be positioned on an even floor surface against a wall.
- Position it at a proper location with at least a 0.6m (2 ft.) clearance around.
- Connect the AC adaptor to the power socket on the rear side. Only use the AC adaptor provided.
- The LCD display on the Recharging Base will turn on when it is plugged in.
- Always keep the Recharging Base power plugged in.

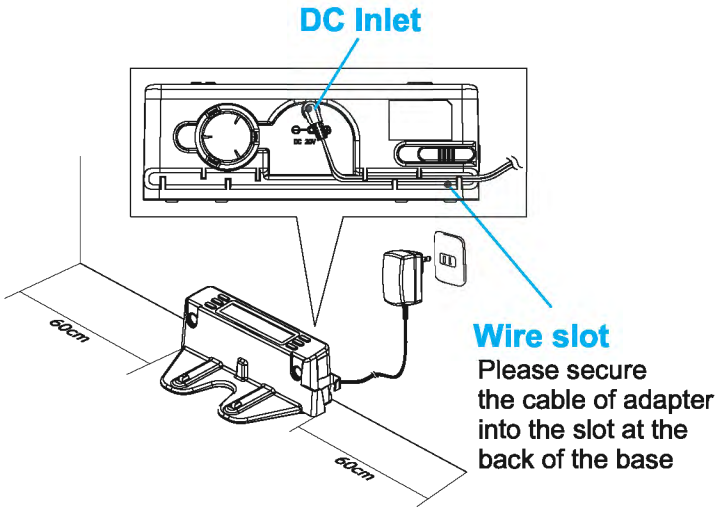

Docking Test

- Leave the robot on the floor somewhere near the Recharging Base.
- Press the "Home" button on the remote control.
- The robot will return to the Recharging Base automatically.
- If the robot fails to dock, check the installation process to make the necessary adjustments to the Recharging Base until the robot can dock properly.

The Robot

Robot Panel Function

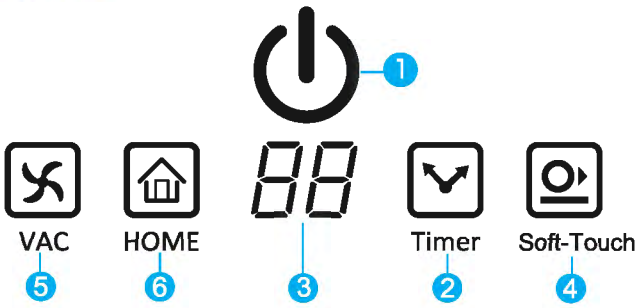

❶ Start/Stop Button

Press ⏻ to activate the robot. Press again to start cleaning. To stop the robot, press ⏻ again or use the remote.

Power Button Light	System Status
Red(Slow-blinking)	Battery Level is low
Blue(Slow-blinking)	The battery is recharging
Solid Blue	The battery is fully recharged

❷ Timer

Users can press ⊡ or use the remote to select the cleaning time from 10, 20, 30, 80mins.
The robot will remember the previous time setting.

❸ Display of Timer/Cleaning Mode/Error Message

There are 6 different cleaning patterns that the robot uses during the cleaning process

A. Auto
1. Special Bounce
2. Spiral
3. Wall-Following
4. Zig-zag
5. Polygonal Spiral

Users can use the remote control to select cleaning modes which will display as numbers and "A"(Auto)
When pressing ⌂ the robot will return home and display as "H".

Error Messages:
If there is something wrong, the robot will stop working immediately and show an error message on the display. Descriptions of error messages are shown below.(P.21)

❹ Soft-Touch:

When activated, the robot will slow down not to collide with any objects while cleaning.

❺ Vacuum Motor:

Please ensure the vacuum motor is activated while cleaning to give best cleaning performance.

❻ HOME:

Automatic recharge.

Remote Control

All function buttons on the robot's front panel are available on the remote control.
There are some additional buttons on the remote control shown below.

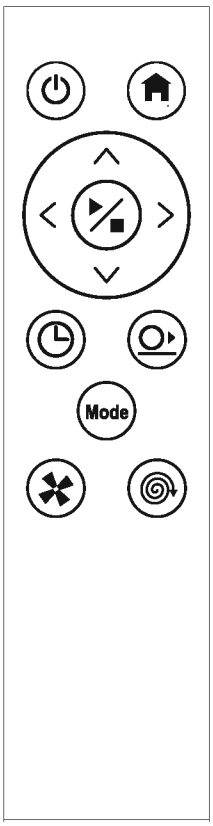

1. **Power Button :** Activate or Shut down the robot.
2. **Start/Stop Button :** Activate or Stop the robot to perform cleaning.
3. **Direction Buttons:** To control the movement manually.
4. **Timer Button:** To set up the cleaning time.
5. **Home Button:**
   Robot will come back to the Recharging Base to recharge.
6. **Mode Button:** To manually set up the cleaning modes, users may find the current pattern code on the robot's display panel.
   A. Auto 1. Special Bounce 2. Spiral 3. Wall-Following 4. Zig-zag 5. Polygonal
7. **Spiral Button:** Spiral cleaning.
8. **VAC Button:** Press this button to activate or to shut down the vacuuming motor.
9. **Soft-Touch Button:** Activate or Shut down the soft-touch.

How to Start Cleaning

1

Before cleaning, it is recommended to clean up small items, like clothing, power cords, cables, and loose fringes of rugs.

2

Check if the dustbin is full. If it is, empty it out.

3

Press the Power Button to activate the robot.

4

Use the remote to set up the preferred cleaning time or modes. Usually, the robot can clean a 5-7 square meter area in 10 minutes. It depends on the types of floors and the complexity of the space.

5

Use the start/stop button on the robot panel or the remote to control the robot.

Time Setting

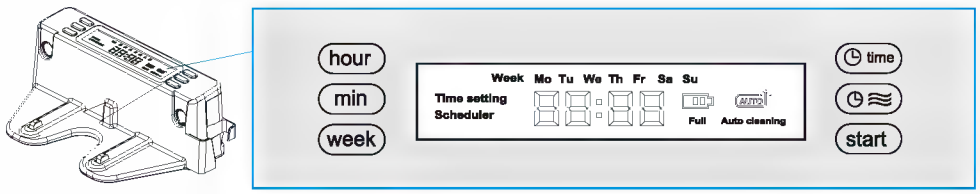

Week Mo Time setting 00:00	Press time
Week Mo Time setting 12:00	Press hour repeatedly.
Week Mo Time setting 12:34	Press min repeatedly.
Week Mo Time setting 12:34	Press week repeatedly to cycle through days.
Week Mo Time setting 12:34	Press time again to save the setting.

Any scheduled cleaning will be activated based on the time on the Recharging Base.
You must set the time before scheduling

Schedule Cleaning

Users can only schedule cleaning when the robot is docked with the Recharging Base.

Week Mo Tu We Th Fr Sa Su Scheduler --:--	Press ⏲≋.
Week Mo Tu We Th Fr Sa Su Scheduler 12:00	Press hour repeatedly.
Week Mo Tu We Th Fr Sa Su Scheduler 12:30	Press min repeatedly.
Week We Th Scheduler 22:30	Press week to show Mo, press week again to select it, or leave it flashing for 8 seconds, when it will switch to Tu automatically. Repeat the process until you've selected the desired days.
Week We Th 22:30	Press ⏲≋ again to save the setting.

Auto Start

When the robot is docked in the Recharging Base and recharging:

1. Press the start button, The LCD display will show "AUTO", the robot will start one cleaning cycle as the battery is fully charged.
2. Press the start button and hold it for 3 seconds, the robot will start cleaning immediately for one cleaning cycle.

How to Pair the Device

1. The robot is already paired with the Recharging Base which can be used immediately.
2. If there is a replacement/maintenance/new-adding of the robot and accessories, it will need to pair up again.
3. The robot can pair up to two Recharging Bases and two sonic walls. Only purchase the accessories from the authorized dealer.

Pair a New Recharging Base

1. Press ⏻ on Vacuum Robot to turn it on.
2. Press and hold ⌂ on Vacuum Robot until you hear two beeps, and the display panel shows “Cd”.
3. Check Vacuum Robot’s status.

	Both light up	Vacuum Robot has connected to two Recharging Bases already.
	Either lights up	Vacuum Robot has connected to only one Recharging Base.
	Both are off	Vacuum Robot has not connected to any Recharging Base.

4. Press time on the Recharging Base until you hear two beeps, and either the ⌂ or ⌂ button lights up.
5. Press ⏻ on Vacuum Robot to exit pairing mode.

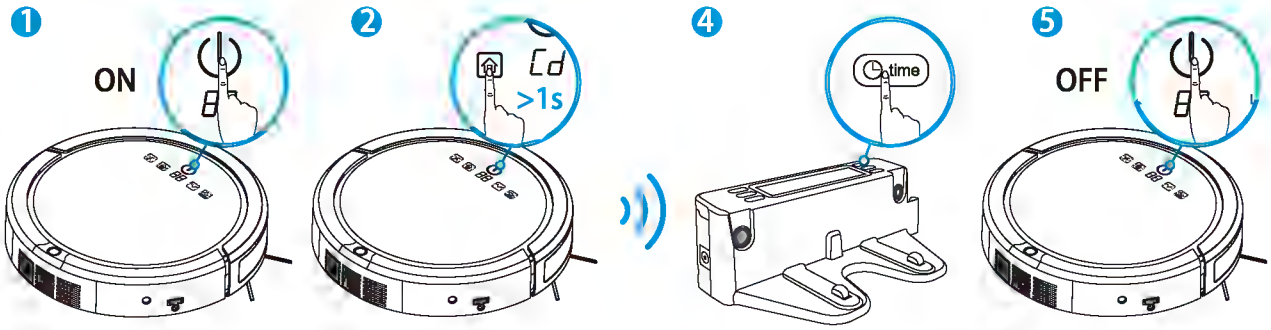

Clear the Pairing Records

1. Press ⏻ on Vacuum Robot to turn it on.
2. Press and hold ⌂ until you hear two beeps, and the display panel shows “Cd”.
3. Press and hold ⌂ again until all four buttons light off.

Tips Before Using The Robot

TIP#1 : Prepare the cleaning area and remove large debris, loose cables, wires, and items that can be easily tangled with brush or knocked over.

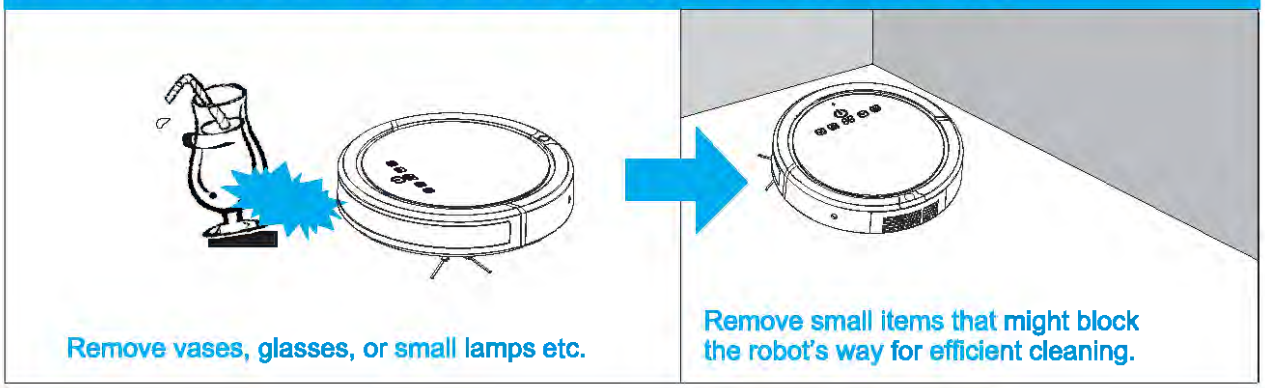

TIP#2 : Leave enough clearance (15"or more) for the robot to operate.

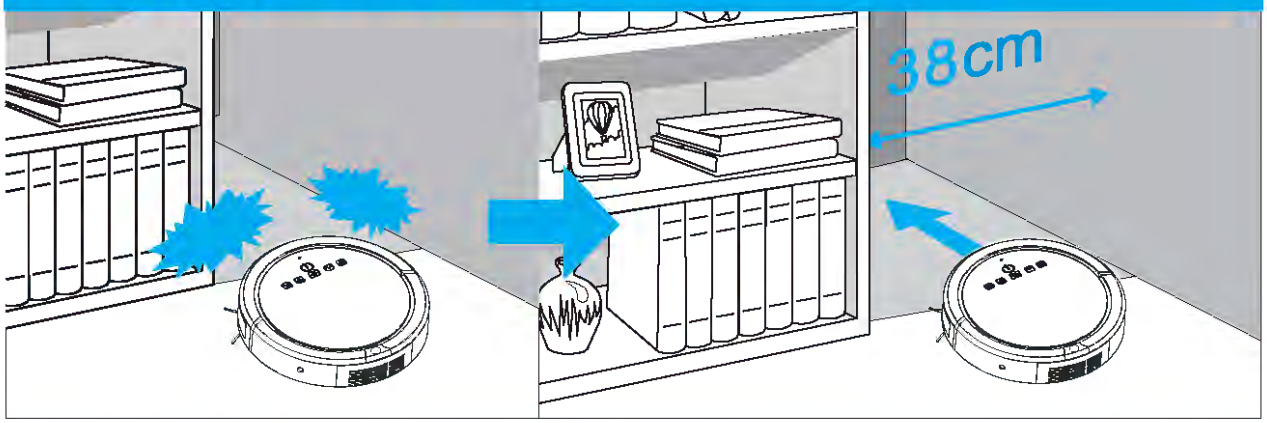

TIP#3 : Do not let loose edges of rugs, drapes, or table cloths to get caught by the robot brushes. Roll the loose edges of rugs underneath.

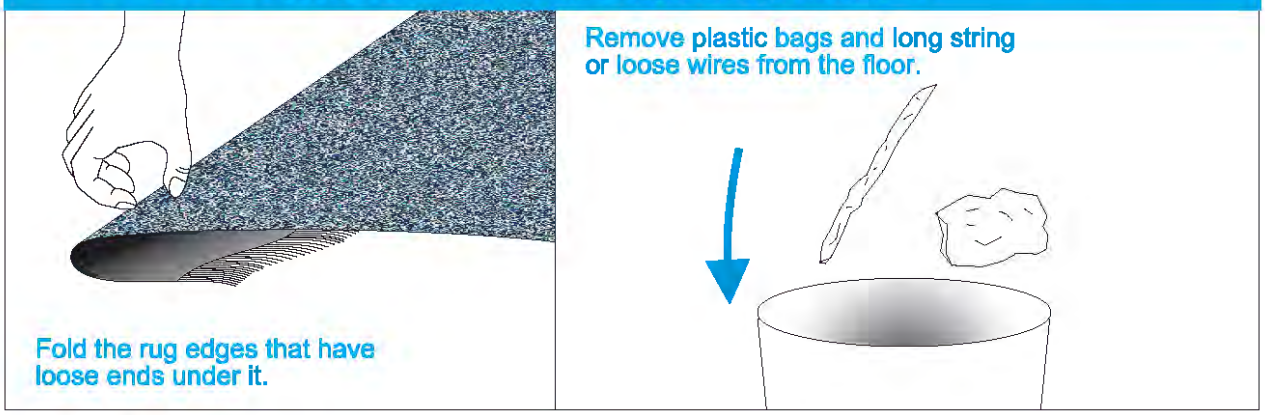

TIP#4 : Fixing jams: If some object gets caught with roller brush or side brush, turn the robot's power off immediately. Remove anything that caused the jam before using the robot again.

The robot will make a beep when jammed. Turn off the robot.

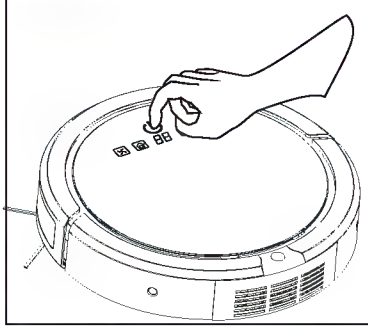

Turn it upside down, and remove the objects.

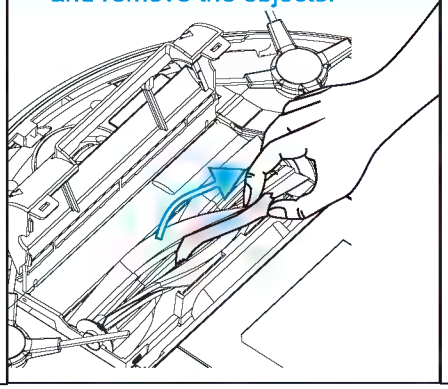

Clean the vacuum entry.

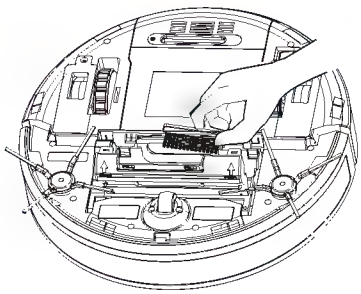

Robot Maintenance

To give the best cleaning performance, regular maintenance is recommended.

1. Dustbin and Filter

Basic Cleaning

1. Press the Dustbin Release Button to remove the dustbin.
2. Press the side button to release the dust compartment.
3. Remove the debris filter.
4. Empty all dust and shake off all debris.
5. Remove the HEPA filter.
6. Use the included brush to wipe out the HEPA filter and debris filter.

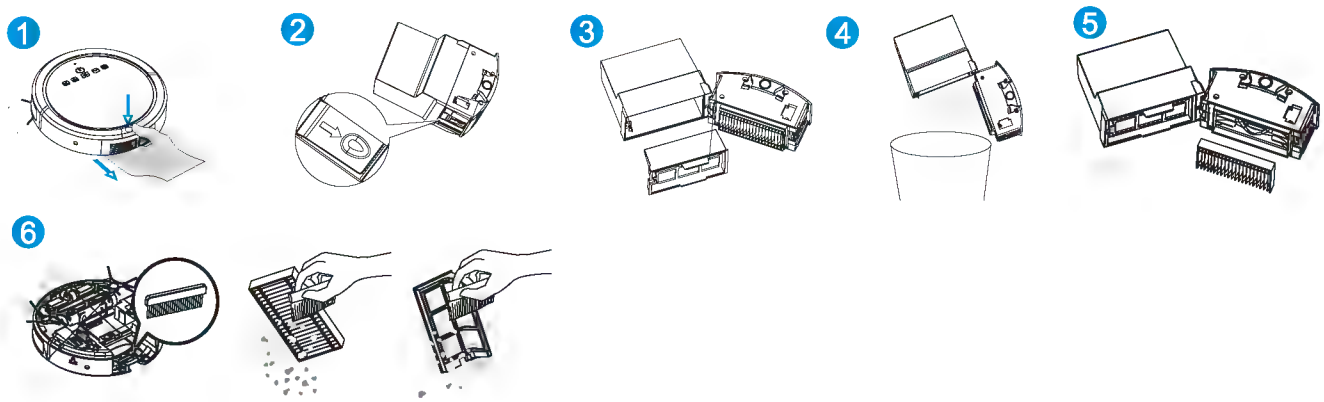

Deep Cleaning

1. Carefully separate the dust compartment from the vacuum motor unit.
2. Gently wash the dust compartment and debris filter.
3. Dry them thoroughly with a cloth.

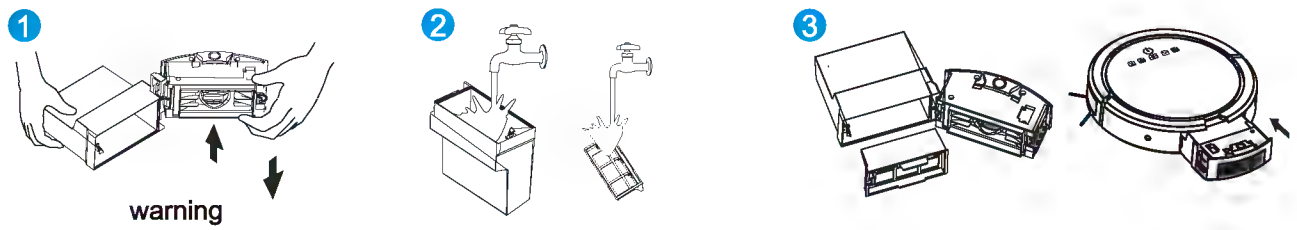

DO NOT wash the HEPA filter, regular maintenance and replacement is recommended.

2. Roller Brush

1. Remove the Roller Brush from the module.
2. Take out the cleaning tool included on the rear side of the Recharging Base.
3. Slide the cleaning tool through the Roller Brush.

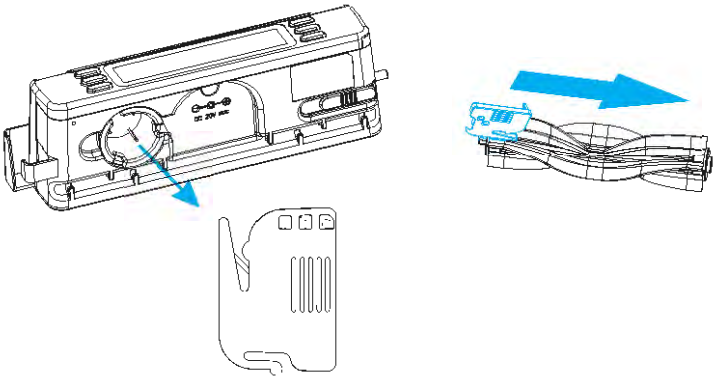

3. Side Brush

1. Remove the side brush from the module.
2. Clean the side brush and install it back on the module.

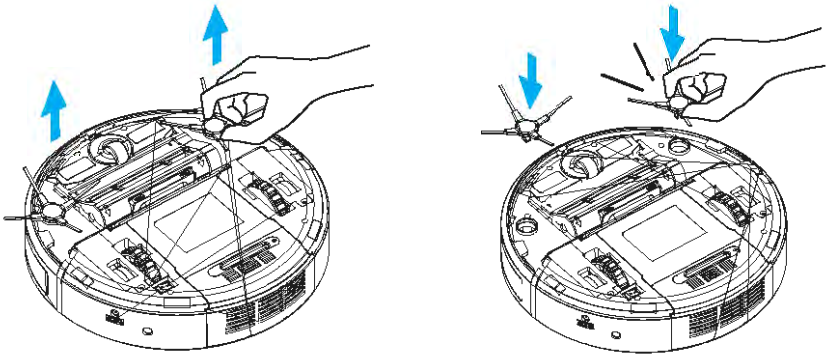

4. Wheels and Sensor

1. Check and remove all debris and dirt.
2. Wipe all sensors gently with a dry cloth.

5. Recommended Robot Care

Robot Part	Care Frequency	Replacement Frequency
Dustbin	After each use	—
HEPA Filter	Once per week (twice a week in home with pets)	Every 3 months
Side Brush	Once per week (twice a week in home with pets)	Every 3 months
Floating Roller Brush	Once per week (twice a week in home with pets)	Every 3 months
Wheel	Once every 2 weeks	—
Front Wheel	Once every 2 weeks	—
Ultrasonic Sensors	Once per month	—
Cliff Sensors	Once per month	—
Recharging Base	Once per month	—
Battery	Please remove the battery if not using for more than one month. Fully recharged before using the battery.	Every 12 months

6. Battery Care

1. Battery is consumable, regular replacement is suggested. Please contact Customer Service or purchase from an authorized dealer.
2. The battery performance might be limited due to:
   * Intense vibration or drops.
   * Stored in the robot and unused for extended period of time.
   * Exposure to a high temperature environment like direct sunlight, a heater, and fireplace.
   * Used beyond the temperature limit. (32°F - 104°F)
3. For long-term storage (more than a month), remove the battery from the robot and keep it in a cool, dry place.
4. With proper care, the battery can last for many cleaning cycles.

Troubleshooting

Problem	Solutions
Robot cannot be activated	• Check whether the power switch is turned on. • Check whether the battery has been charged. • Replace the batteries in the remote control. (2 type AAA batteries). • Make sure the remote control is within range. (less than 3m).
Robot suddenly stops working	• Check whether the power level is too low. • Check whether the robot is stuck or trapped by an obstacle.
The suction becomes weak	• Check whether any debris blocks the suction inlet. • Empty the dust collector. • Clean the filter.
Robot cannot find its way home	• Check whether the Recharging Base is plugged into the outlet. • Remove objects within 1m to the right and left side and within 2m to the front. • Dust off the recharging contact pins with a dry cloth. • Ensure the Sonic Wall is not installed too close to the Recharging Base.
The roller brush does not rotate	• Clean the roller brush. • Check whether the roller brush has been installed properly.
Robot's movements or cleaning path are abnormal	• Clean the sensors carefully with a dry cloth. • Restart the robot.

Error Codes

Error code	Cause	Solution
E1	• The robot's cliff sensors are dirty. • The robot gets stuck or trapped while cleaning.	• Clean the cliff sensors with a dry cloth. • Turn off the robot and restart in a new location.
E2	The robot cannot be charged properly.	Make sure the robot's battery is installed properly.
E3	The robot's bumper is stuck.	Tap the robot bumper several times to dislodge any debris that may be trapped underneath.

E4	The robot's battery is over heated.	Turn off the robot and let it cool down sufficiently, then try recharging again.
E5	The robot's left wheel is stuck.	Turn off the robot and remove any hair or debris from the left wheel.
E6	The robot's right wheel is stuck.	Turn off the robot and remove any hair or debris from the right wheel.
E7	The robot's side brush is stuck.	Turn off the robot and remove any hair or debris from the side brush.
E8	The robot's roller brush is stuck.	Turn off the robot and remove any hair or debris from the roller brush.
E9	The robot's front wheel is stuck.	Turn off the robot and remove any hair or debris from the front wheel.

Specifications

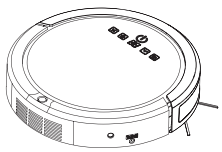	Product Model	NPVWM
	Input	20 V ⎓ 1 A
	Power Consumption	25 W
	Battery Type	DC 14.4 V Li-ion 2500 mAh
	Dust collector capacity	0.4 L
	Cleaning Time	Max 80 mins
	Charging Time	210 mins
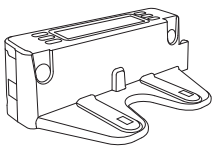	Input	20 V ⎓ 1 A
	Output for Vacuum Robot	20 V ⎓ 1 A

WeBack APP Instructions

Disclaimer: This description is only used as a basic guide. Due to software upgrades, the content of the text interface has changed. Please refer to the actual APP interface.

1.Download and install "WeBack" APP

Scan QR code, download and install ; Or search “WeBack” APP in GoolePlay or Apple app store, download and install.

WeBack

IOS

Google Play

2. Registration

Enter the APP, enter the mobile phone or email account, set the password, click to get the verification code, and after receiving the verification code, enter the correct verification code to complete the registration.

3. Add Devices to APP

3.1 Go to the app, click "Add a device", scan the QR code on the device, and enter the configuration page. Please follow the APP prompts to complete the device configuration.

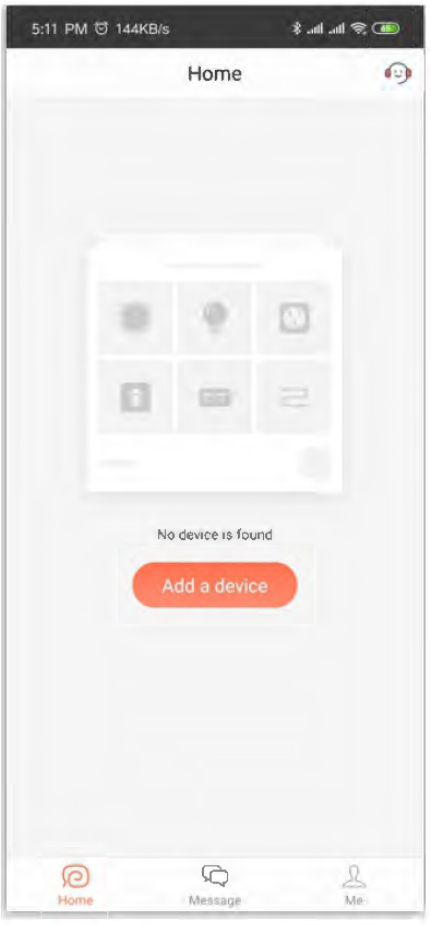
5:11 PM 144KB/s
Home
No device is found
Add a device
Home
Message
Me

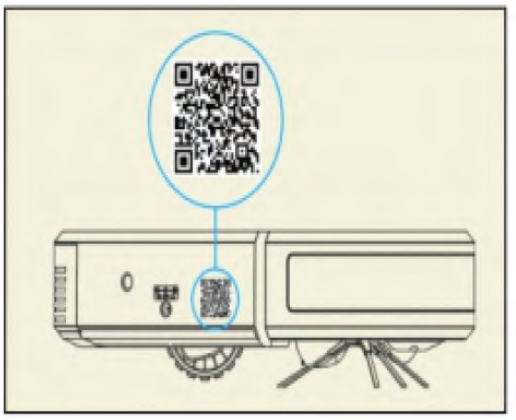

6:14 PM 0.08K/s China M China Teleco 89%
QR code / barcode
Photos
Manual input

4.Operating the device

After the connection is successful, click the device to enter the device operation page.

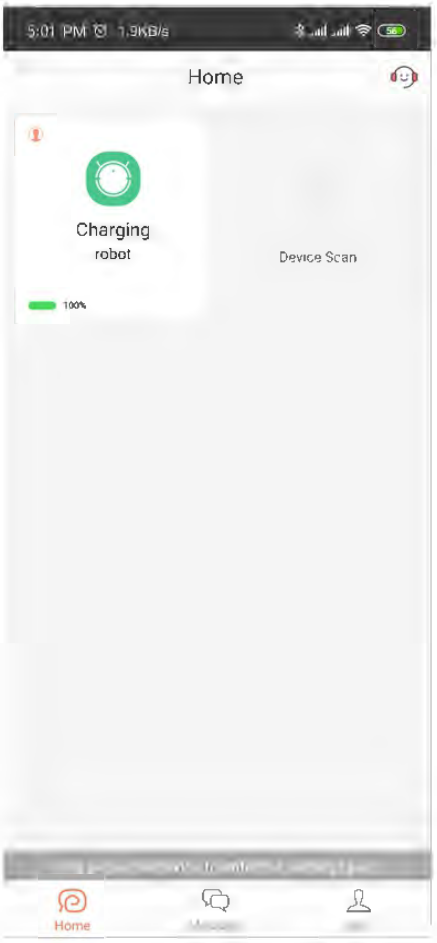

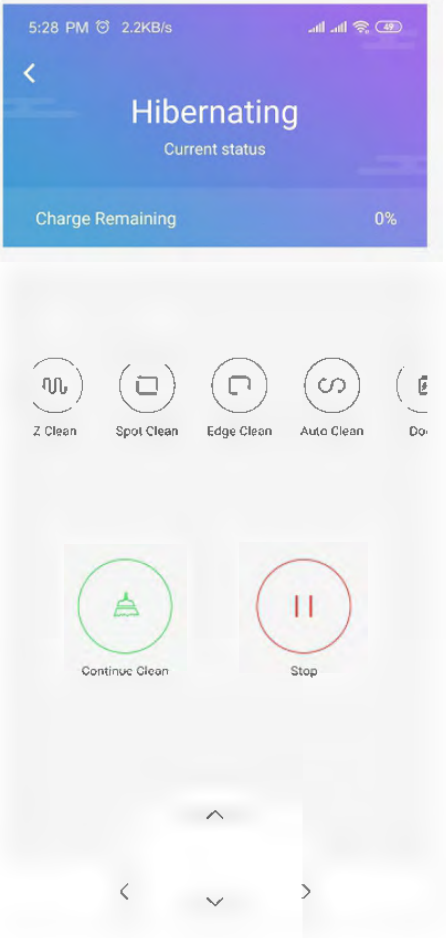

5.Alexa & GoogleHome

Long press the device to enter the settings page，chose third-party connection:

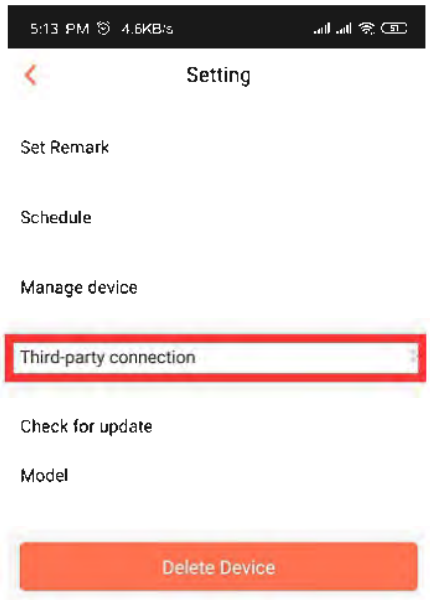

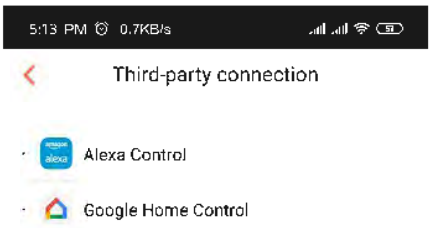

Alexa Control

How to control your device with Amazon Echo?

Step 1: Add equipment

Please add equipment on the first page of the App. Supported devices include: sweeping robots, sockets, lights, etc.

Step 2: Modify the device note name

Open the App homepage, click "WeBack" below, select the corresponding device, click the small dot in the upper right corner of the device box to enter the device's "Settings" interface, and change the device's note name to an English name that Echo easily recognizes, such as: Smart robot , Bedroom light , etc.;

Step 3: Set up Echo

Use the Alexa App or PC version (http://alexa.amazon.com) to set the Echo information in the menu "Setting";

Step 4: Add Skill

Click "Home" on the Alexa App homepage to enter the menu, select "Skill", search for "WeBack" and enter, click "Enable" to enable, and log in the "WeBack" Echoount in the new window;

Step 5: Control the device

Click "Discover Device" on the Alexa App or give the "Alexa , discover device" command to the Echo After about 20 seconds, the Echo will inform you of the number of discovered devices by voice, and then you can control the device through Echo voice; for example:

- Control robot
  - Start cleaning: Alexa, turn on robot. (Turn on "robot name")
  - Stop cleaning:Alexa, turn off robot.

5:13 PM 2.8KB/s

Google Home Control

How to control your device through Google Home?

Step 1: Add equipment

Please add devices on the App homepage first, and make sure that there are devices supporting Google Home in the device list. Currently supported devices are: sweeping robots, sockets, lights, etc.

Step 2: Modify the device note name

Open the App home page, click on the home page, select the corresponding device, enter the device's "Settings" interface, and modify the device into a nickname that Goole Home can easily identify, such as: Robot, Light, etc.

Step 3: Set up Google Home

Use Google Home App to set Google Home smart speaker information;

Step 4: Add Home Control Action

Open Home App, enter the "Home Control" in the side navigation bar, add the device and select the new service, log in to the current App Appount in the new window. After the binding is successful, your device will appear in the "Device" list of "Home Control";

Step 5: Control the device

Use the command "Ok, Google" to wake up Google Home, and then directly use the command to control the device through Google Home; for example

- Control robot
  - Start cleaning:OK, Google / Hey, Google Turn on robot. (Turn on "robot name")
  - Stop cleaning OK, Google / Hey Google Turn off robot
  - Start charging OK, Google / Hey, Google Charge the robot

6. Online Service

If you have any questions, please contact online customer service.

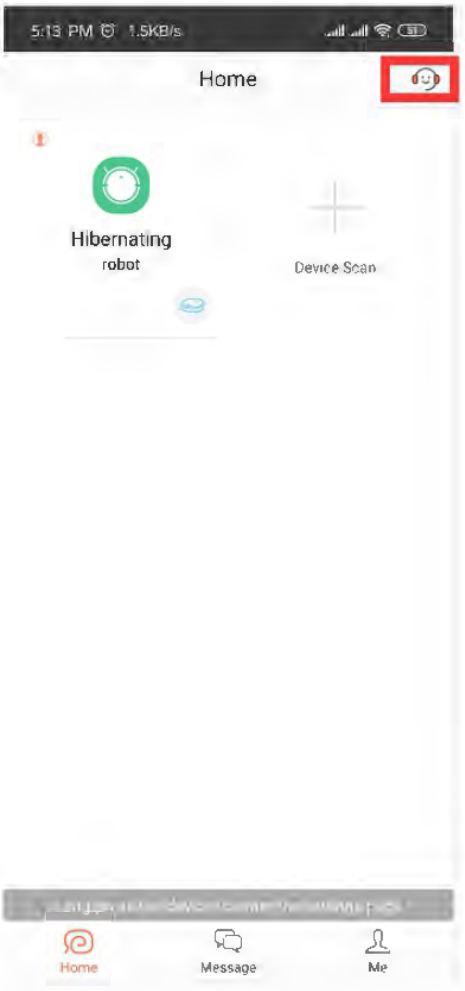

FCC RF Radiation Exposure Statement Caution: To maintain compliance with the FCC's RF exposure guidelines, place the product at least 20cm from nearby persons.

CAUTION: Changes or modifications not approved by the party responsible for compliance could void user's authority to operate the equipment.

NOTE: This equipment has been tested and found to comply with the limits for a Class B digital device, pursuant to Part 15 of the FCC Rules. These limits are designed to provide reasonable protection against harmful interference in a residential installation. This equipment generates, uses and can radiate radio frequency energy and,if not installed and used in accordance with the instructions, may cause harmful interference to radio communications. However, there is no guarantee that interference will not occur in a particular installation. If this equipment does cause harmful interference to radio or television reception, which can be determined by turning the equipment off and on, the user is encouraged to try to correct the interference by one or more of the following measures:

-- Reorient or relocate the receiving antenna.
-- Increase the separation between the equipment and receiver.
--Connect the equipment into an outlet on a circuit different from that to which the receiver is connected.
--Consult the dealer or an experienced radio/TV technician for help.

The user can find the FCC ID after remove the dustbin.