WF1011
Module
Specifications s V1.0

Time	Version	Description of the Update or modification	Released by
2018/12/10	V1.0	First release	Ben Lee

© 2015 Ant-hero has all rights reserved.

Shenzhen Ant-hero Networking Technology Co., Ltd (Abbreviation: “Ant-hero” or our company) reserves all the rights and the logo of owner for the content and the actual name of company and product mentioned in file. Any part of this document shall not be reproduced, shall not be stored in any retrieval system, or transmitted in any form without the written consent of the Ant-hero.

This document is subject to update without prior notice

Directory

1. Product Introduction ..... 错误!未定义书签。

1.1 Product Overview 1
1.2 Product Features ..... 错误!未定义书签。
1.3 Product Applications ..... 错误!未定义书签。
2. Technical Specifications ..... 错误!未定义书签。
2.1 Model ..... 错误!未定义书签。
2.2 Electrical Parameters 3
2.3 Module Pin Definition 4
3. nstrucitons on Usage 6
3.1 Installation Instructions 6
3.2 Circuit Illustration on Module Used for Regular Applications 7
3.3 Precautions on Storage ..... 错误!未定义书签。
3.4 Precautions on Design ..... 错误!未定义书签。

Ant-hero Confidential

1. Production Introduction

1.1 Product Overview

MY_WFM7231 Wi-Fi module is a solution for single-mode Low Energy, in accordance with 2.4 GHz 802.11b/g/n data transmission protocol. It is truly a SOC solution: the chip integrates all the software and hardware functions of 802.11b/g/n, covering radio frequency and MAC layers. The generally used ARM9 MCU and abundant storage resources enables the chipset to support various network protocols. This module supports SDIO, SPI, dual UAR, dual 12C and full-speed USB interface. It supports multi-channel ADC input voltage tests and real-time signal output. A maximum packaging supports 32 GPIO pins.

Rich power management programs are designed internally to realize extremely-low current under “SOFT-OFF” and “SLEEP” modes, whilst supporting ON-TIME WAKE-UP from inside out. All the GPIO can be configured as interrupt source, to trigger and wake the MCU’s up. Our company has developed a full set of solutions that helps to shorten product development cycle and accelerating the release process.

Module framework:：

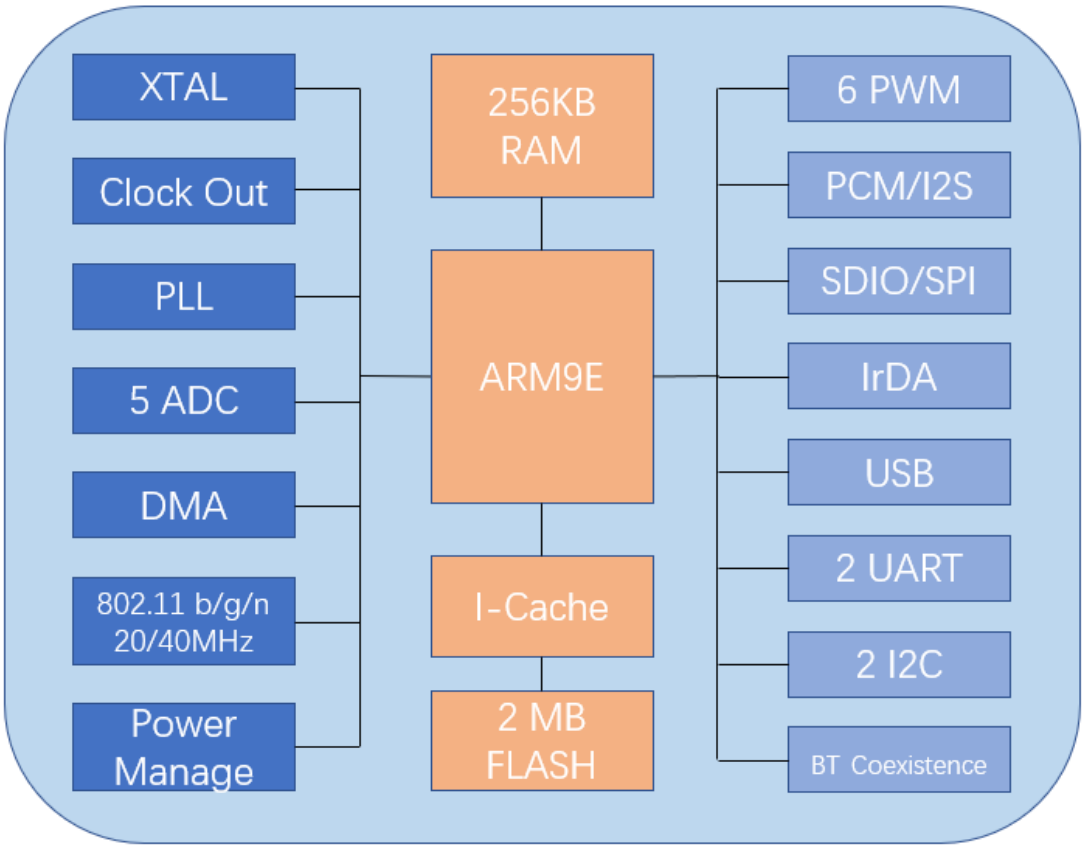

1.2 Product Features:

- In accordance with 802.11 b/g/n 1x1protocol
- Supports 20/40MHz bandwidth and STB
- Supports Wi-Fi STA, AP, Direct and Repeater modes
- Support WPA, WPA2 and WAPI safety protocol
- Supports 5-channel PWM output, I2C and UART interface for external communication
- Built-in FLASH, supports transparent download

深圳市蚂蚁雄兵物联技术有限公司
电话：0755-61865256 地址：深圳宝安沙井中心路 102 号时代中心 19 楼

- Built-in 256 Kbyte data RAM
- Working voltage: 3V-3.6V
- Compact size (18*15*2.25mm), low cost, low power consumption yet high sensitivity ontransmitting and receiving data

1.3 Product Applications:

Smart lighting
Smart home appliances
Medical and healthcare
Industrial wireless control
Video surveillance
Intelligent buildin

Shenzhen Ant-hero Networking Technology Co., Ltd
Tel: +86 755-61865256
Add: 19th Floor, Time Center Building, Centeral Road, Shajing Town, Bao'an District, Shenzhen, China

2. Technical Specifications

2.1 Model

WFM7231 is a Wi-Fi controlling module developed on the basis of BEKEN bk7231 chip.

2.2Electrical Parameters

Product Model	MY_WFM7231 Wi-Fi Module
Radio Frequency Range	2.402~2.480 GHz
Radio Frequency Power	≤8 dBm
Communication distance	40~50m
Working voltage	3.3V ±10%
Working current on Transmittin	170 mA
Working current on Receiving	110 mA
Current on Sleep-mode	100 uA
Ripple Frequency	≤100 mV
Working temperature	-40~85℃
Connecting interface	1*8 with nominal distance of 2.0mm
Dimension	L18 X W15X H2.25 mm

Shenzhen Ant-hero Networking Technology Co., Ltd
Tel: +86 755-61865256
Add: 19th Floor, Time Center Building, Centeral Road, Shajing Town, Bao'an District, Shenzhen, China

Safety Codes & Standards	EU: ETSI EN 300 328 EN 300 440 class 2 America: FCC CFR47 part15 Japan: ARIB STD-T66

2.3Module Pin Definition

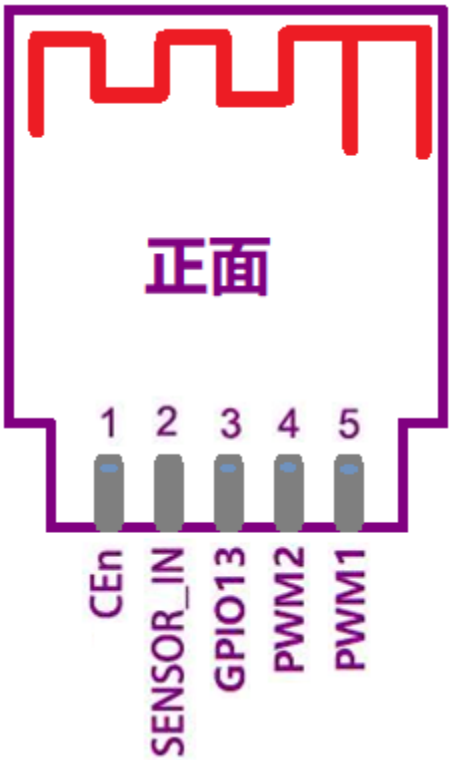

Pin	Name	Type	Function description
1	CEn	CEn	CEn
2	SENSOR_IN	SENSOR_IN	SENSOR_IN
3	GPIO13	GPIO13	GPIO
4	PWM2	PWM2	PWM2
5	PWM1	PWM1	PWM1
6	VCC	VCC	3.3V±10%
7	GND	GND	GND
8	I2C_SDA	I2C_SDA	I2C_SDA
9	I2C_SDL	I2C_SDL	I2C_SDL
10	UART_TX	UART_TX	TX
11	UART_RX	UART_RX	RX

Shenzhen Ant-hero Networking Technology Co., Ltd
Tel: +86 755-61865256
Add: 19th Floor, Time Center Building, Centeral Road, Shajing Town, Bao'an District, Shenzhen, China

Shenzhen Ant-hero Networking Technology Co., Ltd
Tel: +86 755-61865256
Add: 19th Floor, Time Center Building, Centeral Road, Shajing Town, Bao'an District, Shenzhen, China

3. Instructions on Usage

3.1Illustration on pin installation size

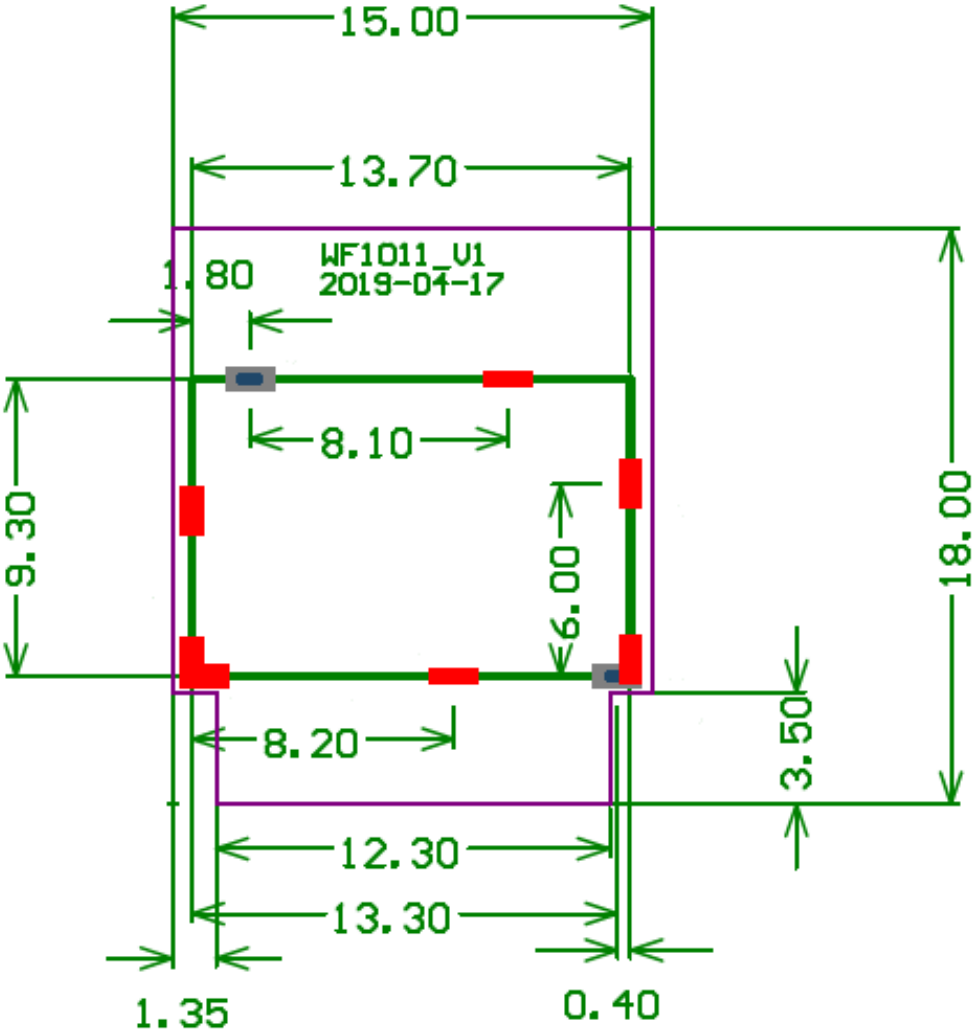

Shenzhen Ant-hero Networking Technology Co., Ltd
Tel: +86 755-61865256
Add: 19th Floor, Time Center Building, Centeral Road, Shajing Town, Bao'an District, Shenzhen, China

3.2Circuit Illustration on Module Used for regular application

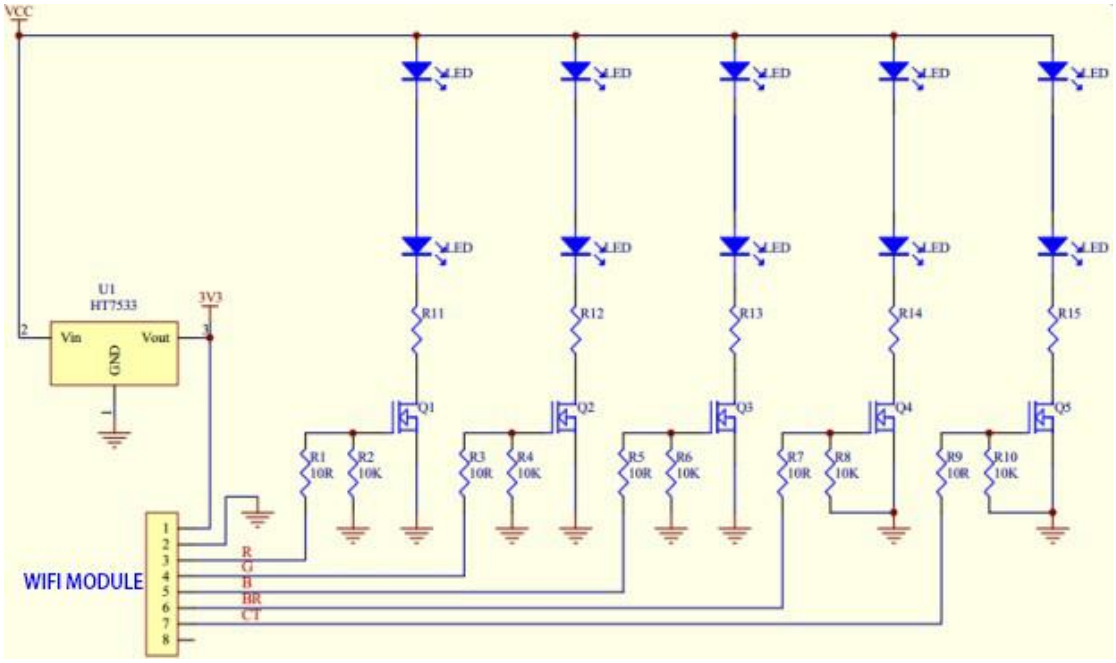

3.3 Precautions on Storage

1) When stored in vacuum seals in an ambient temperature of below 40℃ and relative humidity below 90%, its lifetime is 12 months

2) The peak temperature of packaging is 260℃

3) When the vacuum seal is unpacked, only under the 2 circumstances below, can the module be processed for re-flow soldering or other procedures under higher temperature:

a) Factory ambient environment shall be below 40℃ and relative humidity shall be below60%, and the processing must be finished within 168 hours

b) Stored with a relative humidity of below 10%

3.4 Precautions on Design

1) Stable voltage of 3.3V shall be furnished for the module, with a current⩾100mA, and ripple⩽100mV

2) When installed vertically, the antenna part shall be over 2mm higher, on top of the horizon of metal parts

3) When installed using snap off SMD technique, the module should be placed on the edge of the PCB, while insulated from components or zones generating magnetic field or heating. No copper should be poured at the bottom of the PCB LAYOUT within a reach of 2mm, to avoid interference on the RF distance

Shenzhen Ant-hero Networking Technology Co., Ltd
Tel: +86 755-61865256
Add: 19th Floor, Time Center Building, Centeral Road, Shajing Town, Bao'an District, Shenzhen, China

(OEM) Integrator has to assure compliance of the entire end-product incl. the integrated RF Module. For 15 B (§15.107 and if applicable §15.107) compliance, the host manufacturer is required to show compliance with 15 while the module is installed and operating.

Furthermore the module should be transmitting and the evaluation should confirm that the module's intentional emissions (15C) are compliant (fundamental / out-of-band). Finally the integrator has to apply the appropriate equipment authorization (e.g. Verification) for the new host device per definition in §15.101.

Integrator is reminded to assure that these installation instructions will not be made available to the end user of the final host device.

The final host device, into which this RF Module isintegrated" hasto be labelled with an auxilliary lable stating the FCC IDofthe RF Module, such as "Contains FCC ID:

"This device complies with part 15 of the FCC rules. Operation is subject to the following two conditions:
(1)this devicemay not cause harmful interference, and
(2)this devicemust accept any interference received, including interference thatmay cause undesired operation."

NOTE: This equipment has been tested and found to comply with the limits for a Class B digital device, pursuant to part 15 of the FCC Rules. These limits are designed to provide reasonable protection
against harmful interference in a residential installation. This equipment generates, uses and can radiate radio frequency energy and, if not installed and used in accordance with the instructions, may cause harmful interference to radio communications. However, there is no guarantee that interference will not occur in a particular installation. If this equipment does cause harmful interference to radio or television reception, which can be determined by turning the equipment off and on, the user is encouraged to try to correct the interference by one or more of the following measures:
--Reorient or relocate the receiving antenna.
--Increase the separation between the equipment and receiver.
--Connect the equipment into an outlet on a circuit different from that to which the receiver is connected.
--Consult the dealer or an experienced radio/TV technician for help.

Changes or modifications to this unit not expressly approved by the party responsible for compliance could void the user's authority to operate the equipment.

Module statement

The single-modular transmitter is a self-contained, physically delineated, component for which compliance can be demonstrated independent of the host operating conditions, and which complies with all eight requirements of § 15.212(a)(1) as summarized below.

1) The radio elements have the radio frequency circuitry shielded.
2) The module has buffered modulation/data inputs to ensure that the device will comply with Part 15 requirements with any type of input signal.
3) The module contains power supply regulation on the module.
4) The module contains a permanently attached antenna.
5) The module demonstrates compliance in a stand-alone configuration.
6) The module is labeled with its permanently affixed FCC ID label
7) The module complies with all specific rules applicable to the transmitter, including all the conditions provided in the integration instructions by the grantee.
8) The module complies with RF exposure requirements.

This transmitter/module must not be collocated or operating in conjunction with any other antenna or transmitter.

Integration instructions for host product manufacturers according to KDB 996369 D03 OEM Manual v01

2.2 - List of applicable FCC rules FCC Part 15.247

2.3 - Summarize the specific operational use conditions This transmitter/module and its antenna(s) must not be co-located or operating in conjunction with any other antenna or transmitter. This information also extends to the host manufacturer's instruction manual.

2.4 - Limited module procedures not applicable

2.5 - Trace antenna designs It is "not applicable" as trace antenna which is not used on the module.

2.6 - RF exposure considerations This equipment complies with FCC RF radiation exposure limits set forth for an uncontrolled environment. This compliance to FCC radiation exposure limits for an uncontrolled environment, and minimum of 50cm separation between antenna and body.
The host product manufacturer would provide the above information to end users in their end-product manuals.

2.7 - Antennas The module equipped with PCB Antenna（-0.35dBi, 2.412 GHz to 2.462GHz）.

2.8 - Label and compliance information The end product must carry a physical label or shall use e-labeling followed KDB784748D01 and KDB 784748 stating "Contains Transmitter Module FCC ID: 2ATRRWF1011".

2.10 - Additional testing, Part 15 Subpart B disclaimer The modular transmitter is only FCC authorized for the specific rule parts (FCC Part15.247) listed on the grant, and that the host product manufacturer is responsible for compliance to any other FCC rules that apply to the host not covered by the modular transmitter grant of certification. The final host product still requires Part 15 Subpart B compliance testing with the modular transmitter installed when contains digital circuity.

2.9 Information on test modes and additional testing requirements.

Information on test modes:
The host manufacturer can use software for access to the test modes. Connected to the device through the serial port of the host product and control the module. If it does not work, then the host product manufacturer should coordinate with the module manufacturer for access to test mode software.

The following provides guidance to host product when installing this module on how they may verify the end product:

A. If the modular transmitter has been fully tested by the module grantee on the required number of channels, modulation types, and modes, it should not be necessary for the host installer to re-test all the available transmitter modes or settings. It is recommended that the host product manufacturer, installing the modular transmitter, perform some investigative measurements to confirm that the resulting composite system does not exceed the spurious emissions limits or band edge limits(e.g., where a different antenna may be causing additional emissions).
B. The testing should check for emissions that may occur due to the intermixing of emissions with the other transmitters, digital circuitry, or due to physical properties of the host product (enclosure). This investigation is especially important when integrating multiple modular transmitters where the certification is based on testing each of them in a stand-alone configuration. It is important to note that host product manufacturers should not assume that because the modular transmitter is certified that they do not have any responsibility for final product compliance.
C. If the investigation indicates a compliance concern the host product manufacturer is obligated to mitigate the issue. Host products using a modular transmitter are subject to all the applicable individual technical rules as well as to the general conditions of operation in sections 15.5, 15.15, and 15.29 to not cause interference. The operator of the host product will be obligated to stop operating the device until the interference has been corrected.