FCC Test Report

Report No.: AGC00677200301FE01

APPLICATION PURPOSE	:	Original Equipment
PRODUCT DESIGNATION	:	Featurephone
BRAND NAME	:	Win
MODEL NAME	:	F3
APPLICNAT	:	Smartech,C.A..
DATE OF ISSUE	:	Apr. 01, 2020
STANDARD(S)	:	FCC Part 15B Rules
REPORT VERSION	:	V1.0

Attestation of ***G***lobal ***C***ompliance (Shenzhen) Co., Ltd

CAUTION:
This report shall not be reproduced except in full without the written permission of the test laboratory and shall not be quoted out of context.

Report Revise Record

Report Version	Revise Time	Issued Date	Valid Version	Notes
V1.0	/	Apr. 01, 2020	Valid	Initial Release

TABLE OF CONTENTS

1. SYSTEM DESCRIPTION 5
2. MEASUREMENT UNCERTAINTY 6
3. PRODUCT INFORMATION 7
4. SUPPORT EQUIPMENT 8
5. TEST FACILITY 9
6. TEST ITEMS AND THE RESULTS 10
7. FCCLINE CONDUCTED EMISSION TEST 11
7.1. LIMITS OF LINE CONDUCTED EMISSION TEST 11
7.2. BLOCK DIAGRAM OF TEST SETUP 11
7.3. PROCEDURE OF LINE CONDUCTED EMISSION TEST 12
7.4. TEST RESULT OF LINE CONDUCTED EMISSION TEST 13
8. FCC RADIATED EMISSION TEST 15
8.1. EXCEPT FOR CLASS A DIGITAL DEVICES, THE FIELD STRENGTH OF RADIATED EMISSIONS FROM UNINTENTIONAL RADIATORS AT A DISTANCE OF 3 METERS SHALL NOT EXCEED THE FOLLOWING VALUES: 15
8.2. BLOCK DIAGRAM OF TEST SETUP 16
8.3. PROCEDURE OF RADIATED EMISSION TEST 17
8.4. TEST RESULT OF RADIATED EMISSION TEST 18
APPENDIX A: PHOTOGRAPHS OF TEST SETUP 22

1. VERIFICATION OF CONFORMITY

Applicant	Smartech,C.A.
Address	Manongo Avenue with Palma Real Street,C.C. Via Veneto,Milan Level,M32 Local,Manongo Valencia Venezuela
Manufacturer	United Creation Technology Corp.,Ltd
Address	Room 201, Block A, Science and technology buliding phase-2, Nanhai Road 1057, Shekou, Nanshan district, Shenzhen
Factory	United Creation Technology Corp.,Ltd
Address	Room 201, Block A, Science and technology buliding phase-2, Nanhai Road 1057, Shekou, Nanshan district, Shenzhen
Product Designation	Featurephone
Brand Name	Win
Test Model	F3
Hardware Version	MM7202-MB-V1.1
Software Version	MM7202Q1_F3_W258_WIN_V05_20200309_1642
Date of test	Mar. 16, 2020~Apr. 01, 2020
Deviation	No any deviation from the test method.
Condition of Test Sample	Normal
Report Template	AGCRT-US-IT/AC

The above equipment was tested by Attestation of Global Compliance (Shenzhen) Co., Ltd. for compliance with the requirements set forth in the FCC Rules and Regulations Part 15, the measurement procedure according to ANSI C63.4:2014. This said equipment in the configuration described in this report shows the maximum emission levels emanating from equipment are within the compliance requirements.
The test results of this report relate only to the tested sample identified in this report.

Prepared By

Donjon Huang
(Project Engineer)
Apr. 01, 2020

Reviewed By

Max Zhang
(Reviewer)
Apr. 01, 2020

Approved By

Forrest Lei
(Authorized Officer)
Apr. 01, 2020

2. SYSTEM DESCRIPTION

EUT test procedure:

1. Connect EUT and peripheral devices (PC) through USB port.
2. Power on the EUT, use the software to transfer data between EUT and PC.
3. Make sure the EUT operates normally during the test.

Test Mode

TEST MODE DESCRIPTION		
NO.	**TEST MODE DESCRIPTION**	**WORST**
1	USB (connection for data transferring)	V
Note: 1. V means EMI worst mode		

3. MEASUREMENT UNCERTAINTY

Test	Measurement Uncertainty	Notes
Transmitter power conducted	±0.57 dB	(1)
Transmitter power Radiated	±2.20 dB	(1)
Conducted spurious emission 9KHz-40 GHz	±2.20 dB	(1)
Occupied Bandwidth	±0.01ppm	(1)
Radiated Emission 30~1000MHz	±4.10dB	(1)
Radiated Emission Above 1GHz	±4.32dB	(1)
Conducted Disturbance0.15~30MHz	±3.20dB	(1)

Note: This uncertainty represents an expanded uncertainty expressed at approximately the 95% confidence level using a coverage factor of k=2.

4. PRODUCT INFORMATION

Housing Type	Plastic and metal
Hardware Version	MM7202-MB-V1.1
Software Version	MM7202Q1_F3_W258_WIN_V05_20200309_1642
EUT Input Rating	DC 3.8V by Built-in Li-ion Battery

I/O Port Information (☒Applicable ☐Not Applicable)

I/O Port of EUT			
I/O Port Type	**Number**	**Specific**	**Tested With**
USB Port	1	0.8 Unshielded	1
Earphone	1	0.8 Unshielded	1

5. SUPPORT EQUIPMENT

Device Type	Manufacturer	Model Name	Serial No.	Data Cable	Power Cable
PC	Xiaomi Inc.	--	--	--	--
Adapter	Xiaomi Inc.	--	--	--	1.25m Unshielded

Note: All the above equipment/cables were placed in worse case positions to maximize emission signals during emission test.

6. TEST FACILITY

Test Site	Attestation of Global Compliance (Shenzhen) Co., Ltd
Location	1-2/F, Building 19, Junfeng Industrial Park, Chongqing Road, Heping Community, Fuhai Street, Bao'an District, Shenzhen, Guangdong,China
Designation Number	CN1259
FCC Test Firm Registration Number	975832
A2LA Cert. No.	5054.02
Description	Attestation of Global Compliance(Shenzhen) Co., Ltd is accredited by A2LA

TEST EQUIPMENT OF CONDUCTED EMISSION TEST

Equipment	Manufacturer	Model	S/N	Cal. Date	Cal. Due
TEST RECEIVER	R&S	ESPI	101206	Jun. 12, 2019	Jun. 11, 2020
LISN	R&S	ESH2-Z5	100086	Aug.26, 2019	Aug.25, 2020

TEST EQUIPMENT OF RADIATED EMISSION TEST

Equipment	Manufacturer	Model	S/N	Cal. Date	Cal. Due
TEST RECEIVER	R&S	ESCI	10096	Jun. 12, 2019	Jun. 11, 2020
EXA Signal Analyzer	Aglient	N9010A	MY53470504	Dec. 18, 2019	Dec. 17, 2020
Horn antenna	SCHWARZBECK	BBHA 9170	#768	Dec.18, 2019	Dec.17, 2020
preamplifier	ChengYi	EMC184045SE	980508	Sep. 23, 2019	Sep. 22, 2020
Double-Ridged Waveguide Horn	ETS LINDGREN	3117	00034609	May.18, 2019	May.17, 2021
Broadband Preamplifier	SCHWARZBECK	BBV 9718	9718-205	Jun. 12, 2019	Jun. 11, 2020
ANTENNA	SCHWARZBECK	VULB9168	D69250	Sep.20, 2018	Sep.19, 2020

6. TEST ITEMS AND THE RESULTS

Test item	Test Requirement	Test Method	Class/Severity	Result
CONDUCTED EMISSION	FCC Part 15.107 Rules	ANSI C63.4:2014	Class B	Pass
RADIATED EMISSION	FCC Part 15.109 Rules	ANSI C63.4:2014	Class B	Pass

7. FCCLINE CONDUCTED EMISSION TEST

7.1. LIMITS OF LINE CONDUCTED EMISSION TEST

Frequency	Maximum RF Line Voltage	
	Q.P.(dBuV)	Average(dBuV)
150kHz-500kHz	66-56	56-46
500kHz-5MHz	56	46
5MHz-30MHz	60	50

Note:
1. The lower limit shall apply at the transition frequency.
2. The limit decreases linearly with the logarithm of the frequency in the range 0.15 MHz to 0.50MHz.

7.2. BLOCK DIAGRAM OF TEST SETUP

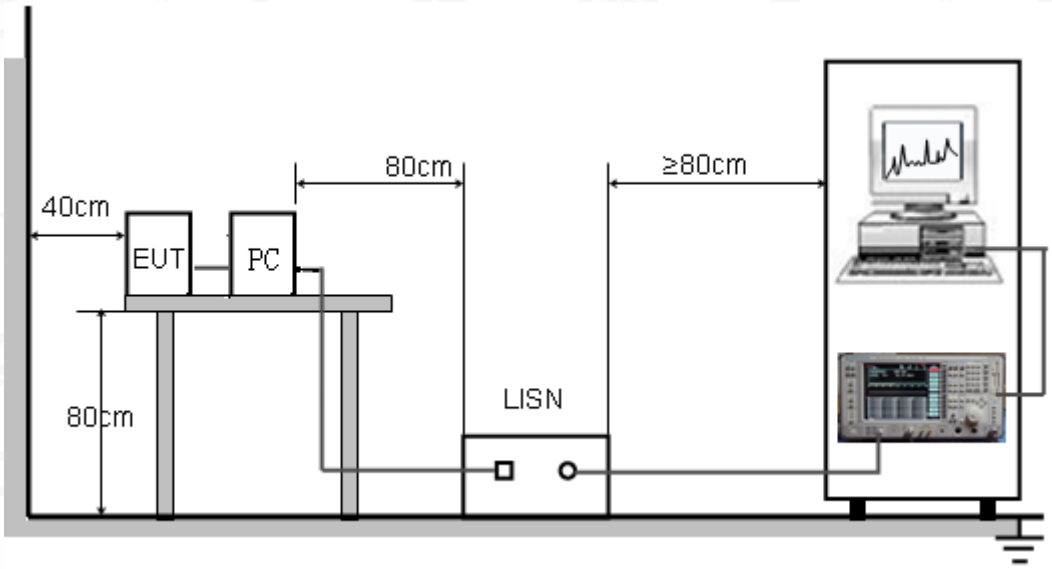

7.3. PROCEDURE OF LINE CONDUCTED EMISSION TEST

(1) The equipment was set up as per the test configuration to simulate typical actual usage per the user's manual. When the EUT is a tabletop system, a wooden table with a height of 0.8 meters is used and is placed on the ground plane as per ANSI C63.4 (see Test Facility for the dimensions of the ground plane used). When the EUT is a floor-standing equipment, it is placed on the ground plane which has a 3-12 mm non-conductive covering to insulate the EUT from the ground plane.

(2) Support equipment, if needed, was placed as per ANSI C63.4.

(3) All I/O cables were positioned to simulate typical actual usage as per ANSI C63.4.

(4) The EUT received DC 5V power from PC with receive AC120V/60Hz power from a LISN.

(5) The EUT test program was started. Emissions were measured on each current carrying line of the EUT using a spectrum Analyzer / Receiver connected to the LISN powering the EUT. The LISN has two monitoring points: Line 1 (Hot Side) and Line 2 (Neutral Side). Two scans were taken: one with Line 1 connected to Analyzer / Receiver and Line 2 connected to a 50 ohm load; the second scan had Line 1 connected to a 50 ohm load and Line 2 connected to the Analyzer / Receiver.

(6) Analyzer / Receiver scanned from 150 kHz to 30MHz for emissions in each of the test modes.

(7) During the above scans, the emissions were maximized by cable manipulation.

(8) A scan was taken on both power lines, Line 1 and Line 2, recording at least the six highest emissions.

(9) Emission frequency and amplitude were recorded into a computer in which correction factors were used to calculate the emission level and compare reading to the applicable limit. If EUT emission level was less –2dB to the A.V. limit in Peak mode, then the emission signal was re-checked using Q.P and Average detector.

The test data of the worst case condition (mode 1) was reported on the Summary Data page.

7.4. TEST RESULT OF LINE CONDUCTED EMISSION TEST

LINE CONDUCTED EMISSION TEST-L

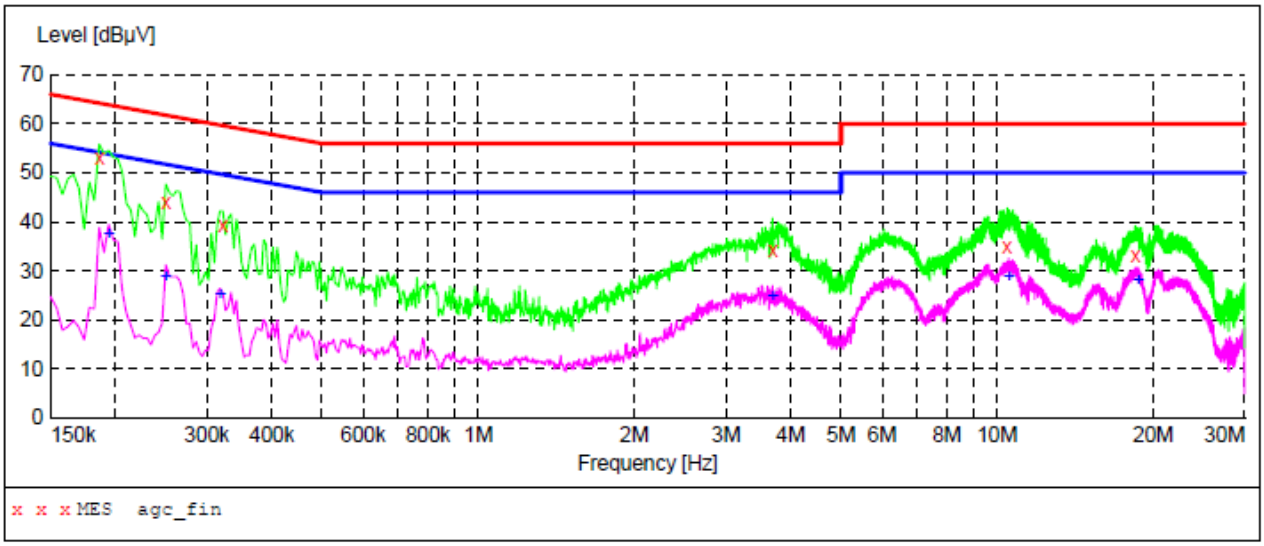

MEASUREMENT RESULT: "agc_fin"

2020/3/25 17:24

Frequency MHz	Level dBµV	Transd dB	Limit dBµV	Margin dB	Detector	Line	PE
0.186000	53.10	11.3	64	11.1	QP	L1	FLO
0.250000	44.10	11.3	62	17.7	QP	L1	FLO
0.322000	39.10	11.3	60	20.6	QP	L1	FLO
3.690000	34.30	11.4	56	21.7	QP	L1	FLO
10.450000	34.90	11.6	60	25.1	QP	L1	FLO
18.438000	33.20	12.2	60	26.8	QP	L1	FLO

MEASUREMENT RESULT: "agc_fin2"

2020/3/25 17:24

Frequency MHz	Level dBµV	Transd dB	Limit dBµV	Margin dB	Detector	Line	PE
0.194000	37.30	11.3	54	16.6	AV	L1	FLO
0.250000	28.90	11.3	52	22.9	AV	L1	FLO
0.318000	25.20	11.3	50	24.6	AV	L1	FLO
3.690000	24.90	11.4	46	21.1	AV	L1	FLO
10.526000	28.70	11.6	50	21.3	AV	L1	FLO
18.678000	28.00	12.2	50	22.0	AV	L1	FLO

LINE CONDUCTED EMISSION TEST-N

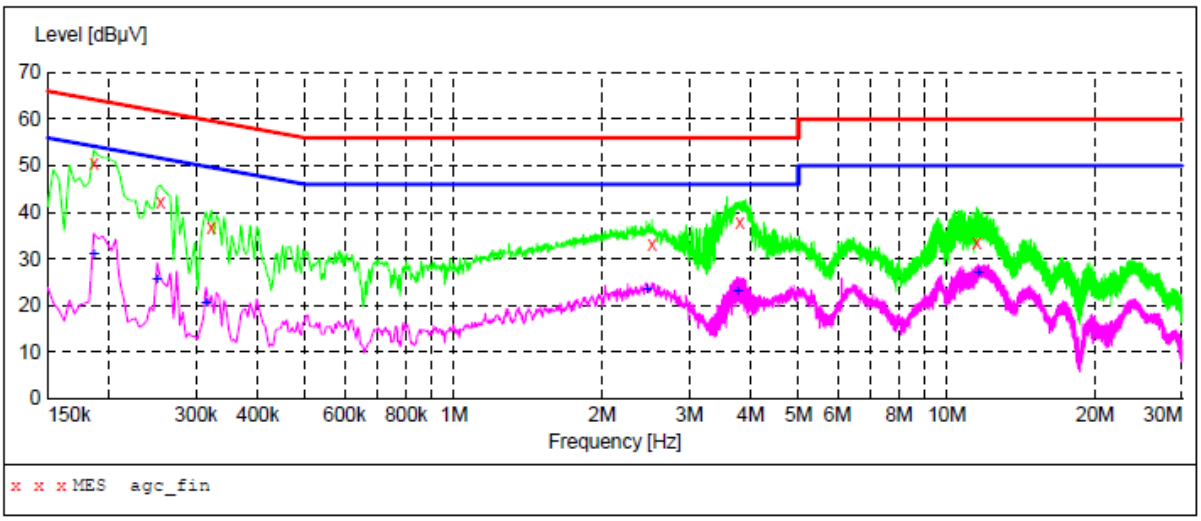

MEASUREMENT RESULT: "agc_fin"

2020/3/25 17:28

Frequency MHz	Level dBµV	Transd dB	Limit dBµV	Margin dB	Detector	Line	PE
0.186000	50.60	11.3	64	13.6	QP	N	FLO
0.254000	42.00	11.3	62	19.6	QP	N	FLO
0.322000	36.60	11.3	60	23.1	QP	N	FLO
2.522000	33.20	11.4	56	22.8	QP	N	FLO
3.802000	37.80	11.4	56	18.2	QP	N	FLO
11.494000	33.50	11.7	60	26.5	QP	N	FLO

MEASUREMENT RESULT: "agc_fin2"

2020/3/25 17:28

Frequency MHz	Level dBµV	Transd dB	Limit dBµV	Margin dB	Detector	Line	PE
0.186000	31.00	11.3	54	23.2	AV	N	FLO
0.250000	25.40	11.3	52	26.4	AV	N	FLO
0.314000	20.60	11.3	50	29.3	AV	N	FLO
2.466000	23.50	11.4	46	22.5	AV	N	FLO
3.766000	23.00	11.4	46	23.0	AV	N	FLO
11.578000	27.10	11.7	50	22.9	AV	N	FLO

RESULT: PASS

8. FCC RADIATED EMISSION TEST

8.1. EXCEPT FOR CLASS A DIGITAL DEVICES, THE FIELD STRENGTH OF RADIATED EMISSIONS FROM UNINTENTIONAL RADIATORS AT A DISTANCE OF 3 METERS SHALL NOT EXCEED THE FOLLOWING VALUES:

Frequency (MHz)	Distance (m)	Maximum Field Strength Limit (dBuV/m/ Q.P.)
30~88	3	40.0
88~216	3	43.5
216~960	3	46.0
Above 960	3	54.0

Note: The lower limit shall apply at the transition frequency.

8.1.1 The following table is the setting of spectrum analyzer and receiver:

Spectrum Parameter	Setting
Start ~Stop Frequency	9KHz~150KHz/RB 200Hz for QP
Start ~Stop Frequency	150KHz~30MHz/RB 9KHz for QP
Start ~Stop Frequency	30MHz~1000MHz/RB 120KHz for QP
Start ~Stop Frequency	1GHz~26.5GHz 1MHz/1MHz for Peak, 1MHz/10Hz for Average

Receiver Parameter	Setting
Start ~Stop Frequency	9KHz~150KHz/RB 200Hz for QP
Start ~Stop Frequency	150KHz~30MHz/RB 9KHz for QP
Start ~Stop Frequency	30MHz~1000MHz/RB 120KHz for QP

8.2. BLOCK DIAGRAM OF TEST SETUP

System Diagram of Connections between EUT and Simulators

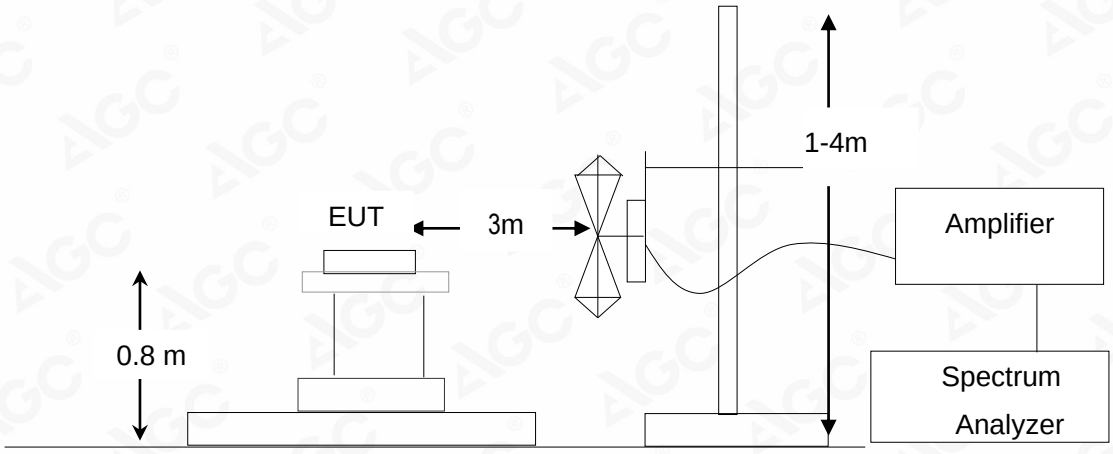

RADIATED EMISSION TEST SETUP ABOVE 1000MHz

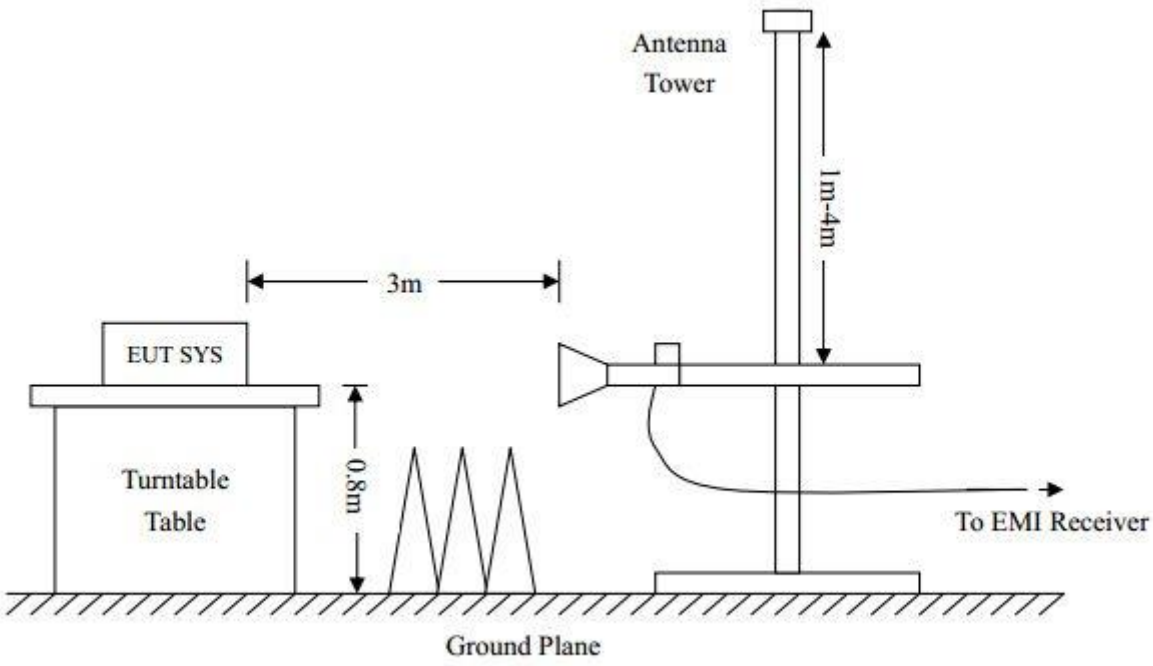

8.3. PROCEDURE OF RADIATED EMISSION TEST

1. Configure the EUT according to ANSI C63.4. The EUT was placed on the top of the turntable 0.8 meter above ground. The phase center of the receiving antenna mounted on the top of a height-variable antenna tower was placed 3 meters far away from the turntable.
2. Power on the EUT and all the supporting units. The turntable was rotated by 360 degrees to determine the position of the highest radiation.
3. The height of the broadband receiving antenna was varied between one meter and four meters above ground to find the maximum emissions field strength of both horizontal and vertical polarization.
4. For each suspected emissions, the antenna tower was scan (from 1 M to 4 M) and then the turntable was rotated (from 0 degree to 360 degrees) to find the maximum reading.
5. Set the test-receiver system to Peak or CISPR quasi-peak Detect Function with specified bandwidth under Maximum Hold Mode.
6. For emissions above 1GHz, use 1MHz RBW and 3MHz VBW for peak reading. Then 1MHz RBW and 3MHz VBW for average reading in spectrum analyzer. The EUT was placed on the top of the turntable 0.8 meter above ground. The phase center of the receiving antenna mounted on the top of a height-variable antenna tower was placed 3 meters far away from the turntable.
7. When the radiated emissions limits are expressed in terms of the average value of the emissions, and pulsed operation is employed, the measurement field strength shall be determined by averaging over one complete pulse train, including blanking intervals, as long as the pulse train does not exceed 0.1 seconds. As an alternative (provided the transmitter operates for longer than 0.1 seconds) or in cases where the pulse train exceeds 0.1 seconds, the measured field strength shall be determined from the average absolute voltage during a 0.1 second interval during which the field strength is at its maximum values.
8. If the emissions level of the EUT in peak mode was 3 dB lower than the average limit specified, then testing will be stopped and peak values of EUT will be reported, otherwise, the emissions which do not have 3 dB margin will be repeated one by one using the quasi-peak method for below 1GHz.
9. If the emission level of the EUT in peak mode was 10 dB lower than the limit specified, then testing could be stopped and the peak values of the EUT would be reported. Otherwise the emissions that did not have 10 dB margin would be re-tested one by one using peak, quasi-peak or average method as specified and then reported in a data sheet.
10. In case the emission is lower than 30MHz, loop antenna has to be used for measurement and the recorded data should be QP measured by receiver. High - Low scan is not required in this case.
11. The test data of the worst case condition (mode 1) was reported on the Summary Data page.

8.4. TEST RESULT OF RADIATED EMISSION TEST

RADIATED EMISSION TEST AT 3M DISTANCE-HORIZONTAL

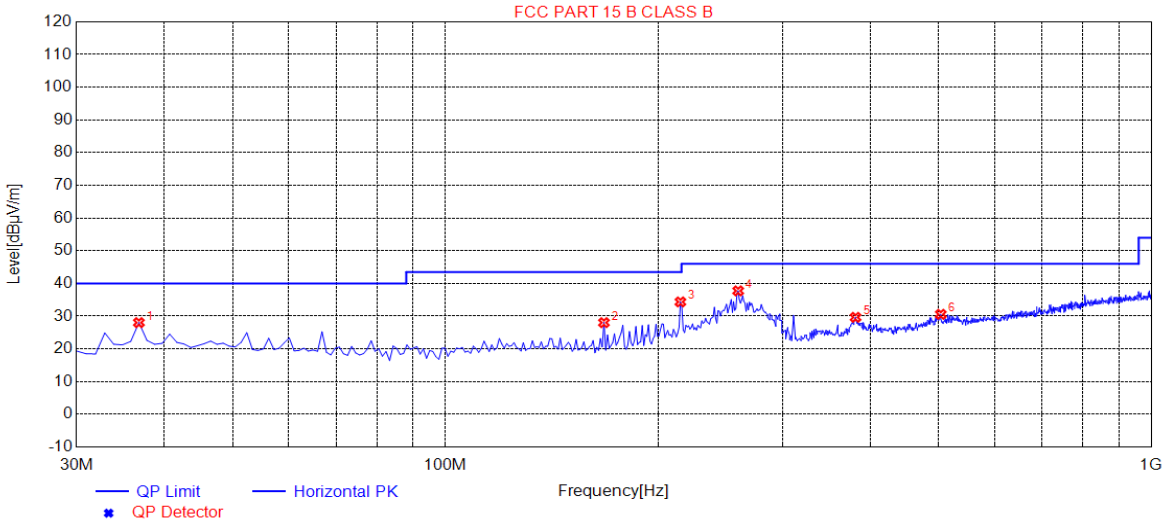

NO.	Freq. [MHz]	Level [dBμV/m]	Factor [dB]	Limit [dBμV/m]	Margin [dB]	Height [cm]	Angle [°]	Polarity
1	36.7900	28.04	14.16	40.00	11.96	100	121	Horizontal
2	167.7400	28.03	14.17	43.50	15.47	100	194	Horizontal
3	215.2700	34.37	12.98	43.50	9.13	100	102	Horizontal
4	259.8900	37.75	14.56	46.00	8.25	100	105	Horizontal
5	381.1400	29.65	19.09	46.00	16.35	100	357	Horizontal
6	503.3600	30.57	22.26	46.00	15.43	100	289	Horizontal

RESULT: PASS

RADIATED EMISSION TEST AT 3M DISTANCE-VERTICAL

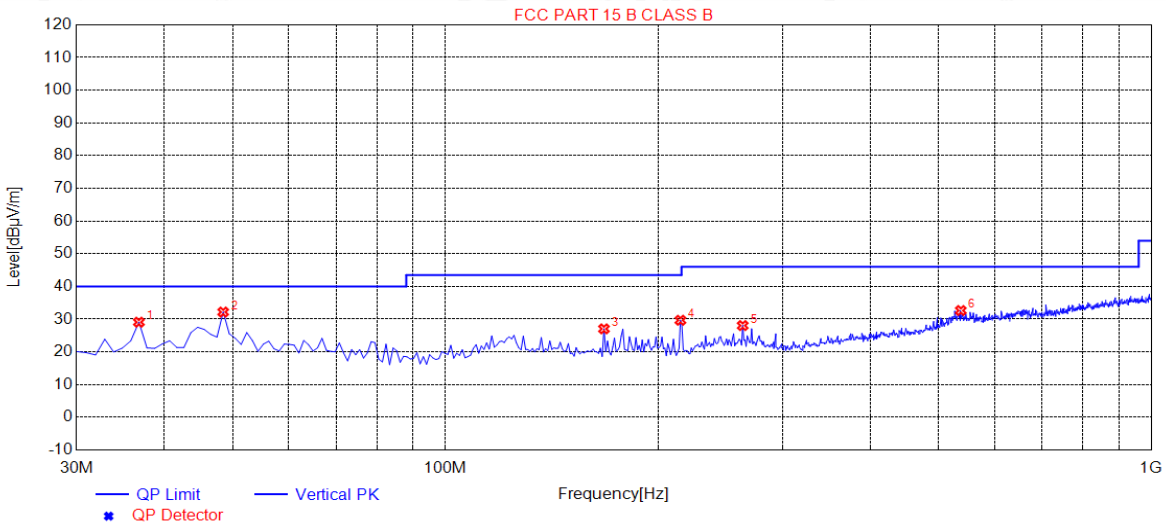

NO.	Freq. [MHz]	Level [dBµV/m]	Factor [dB]	Limit [dBµV/m]	Margin [dB]	Height [cm]	Angle [°]	Polarity
1	36.7900	29.09	14.16	40.00	10.91	100	320	Vertical
2	48.4300	32.19	14.71	40.00	7.81	100	248	Vertical
3	167.7400	27.05	14.17	43.50	16.45	100	23	Vertical
4	215.2700	29.68	12.98	43.50	13.82	100	202	Vertical
5	263.7700	28.05	14.88	46.00	17.95	100	320	Vertical
6	537.3100	32.65	22.98	46.00	13.35	100	202	Vertical

RESULT: PASS

Note: 1.Measurement = Reading + Factor, Over = Measurement – Limit.

2. The “Factor” value can be calculated automatically by software of measurement system.

RADIATED EMISSION ABOVE 1GHZ TEST AT 3M DISTANCE –HORIZONTAL

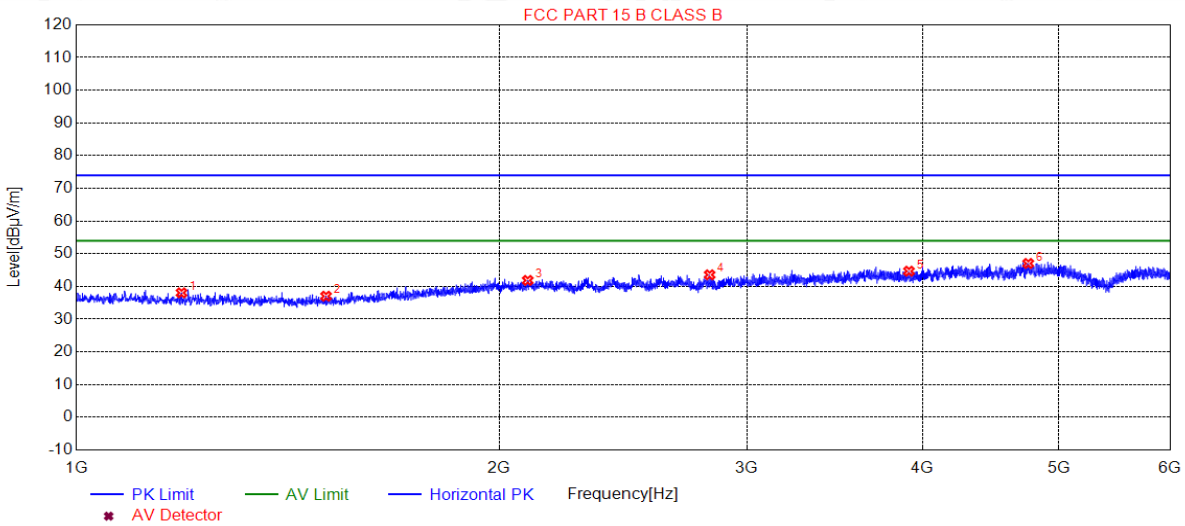

NO.	Freq. [MHz]	Level [dBµV/m]	Factor [dB]	Limit [dBµV/m]	Margin [dB]	Height [cm]	Angle [°]	Polarity
1	1188.0188	38.06	-16.82	74.00	35.94	100	138	Horizontal
2	1505.5506	37.03	-17.07	74.00	36.97	100	128	Horizontal
3	2095.1095	41.86	-11.42	74.00	32.14	100	287	Horizontal
4	2822.6823	43.57	-9.47	74.00	30.43	100	158	Horizontal
5	3912.7913	44.68	-6.69	74.00	29.32	100	353	Horizontal
6	4757.3757	47.04	-4.95	74.00	26.96	100	88	Horizontal

RADIATED EMISSION ABOVE 1GHZ TEST AT 3M DISTANCE –VERTICAL

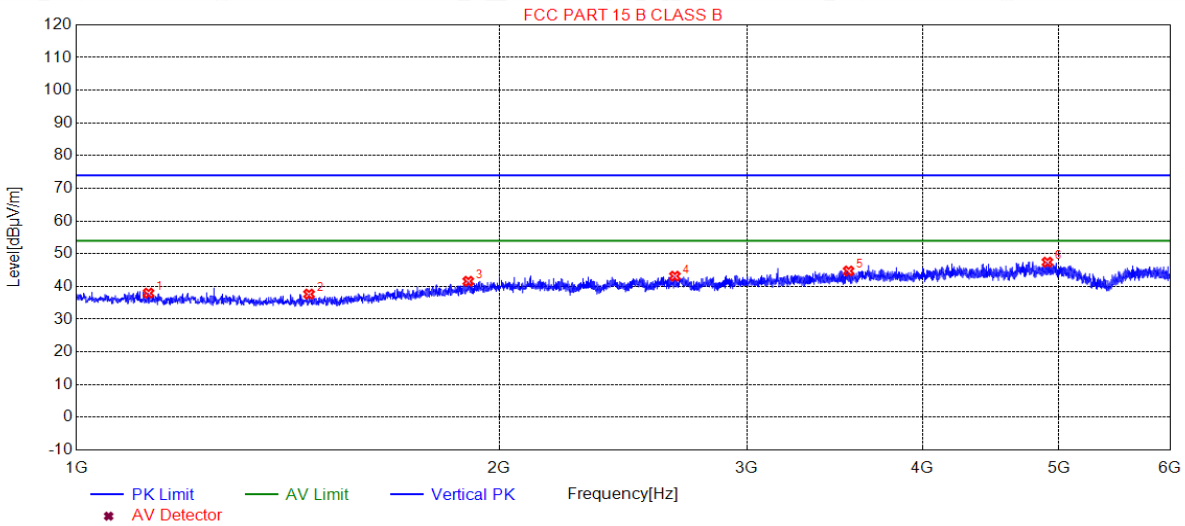

NO.	Freq. [MHz]	Level [dBµV/m]	Factor [dB]	Limit [dBµV/m]	Margin [dB]	Height [cm]	Angle [°]	Polarity
1	1125.5126	37.97	-16.76	74.00	36.03	100	113	Vertical
2	1464.0464	37.67	-17.09	74.00	36.33	100	171	Vertical
3	1900.5901	41.60	-12.88	74.00	32.40	100	103	Vertical
4	2666.1666	43.16	-9.59	74.00	30.84	100	44	Vertical
5	3544.2544	44.74	-7.50	74.00	29.26	100	191	Vertical
6	4908.8909	47.44	-4.81	74.00	26.56	100	230	Vertical

Note: 1. Emissions range from 6GHz to 12.5GHz have 20dB margin. No recording in the test report.
2. Factor=Antenna Factor + Cable loss - Amplifier gain, Margin=Measurement-Limit.
3. The “Factor” value can be calculated automatically by software of measurement system.

APPENDIX A: PHOTOGRAPHS OF TEST SETUP

FCC LINE CONDUCTED EMISSION TEST SETUP

FCC RADIATED EMISSION TEST SETUP

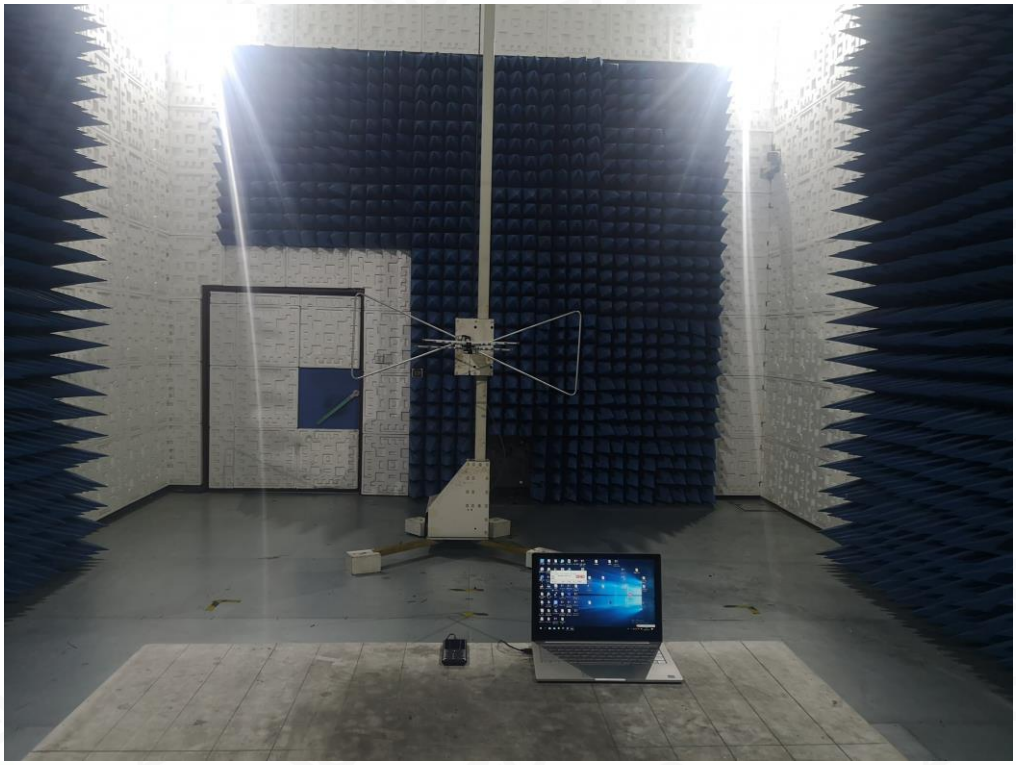

FCC RADIATED EMISSION TEST SETUP

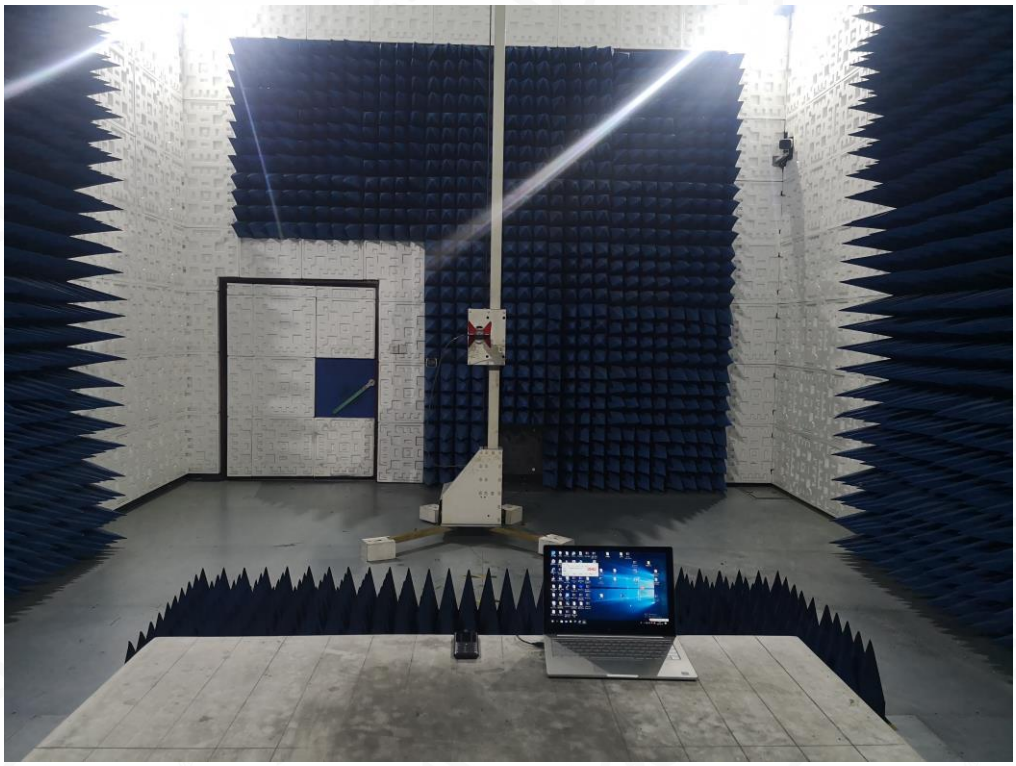

----END OF REPORT----