FCC Test Report

Report No.: AGC00677200901FE01

APPLICATION PURPOSE	:	Original Equipment
PRODUCT DESIGNATION	:	Smartphone
BRAND NAME	:	Win
MODEL NAME	:	M5+
APPLICNAT	:	Smartech,C.A..
DATE OF ISSUE	:	Oct. 27, 2020
STANDARD(S)	:	FCC Part 15B Rules
REPORT VERSION	:	V1.0

Attestation of ***G***lobal ***C***ompliance (Shenzhen) Co., Ltd

Any report having not been signed by authorized approver, or having been altered without authorization, or having not been stamped by the "Dedicated Testing/Inspection Stamp" is deemed to be invalid. Copying or excerpting portion of, or altering the content of the report is not permitted without the written authorization of AGC. The test results presented in the report apply only to the tested sample. Any objections to report issued by AGC should be submitted to AGC within 15days after the issuance of the test report. Further enquiry of validity or verification of the test report should be addressed to AGC by agc@agc-cert.com.

Attestation of Global Compliance(Shenzhen)Co., Ltd
Attestation of Global Compliance(Shenzhen)Std & Tech Co., Ltd
Tel: +86-755 2523 4088 E-mail: agc@agc-cert.com Web: http://cn.agc-cert.com/

Report Revise Record

Report Version	Revise Time	Issued Date	Valid Version	Notes
V1.0	/	Oct. 27, 2020	Valid	Initial Release

Any report having not been signed by authorized approver, or having been altered without authorization, or having not been stamped by the "Dedicated Testing/Inspection Stamp" is deemed to be invalid. Copying or excerpting portion of, or altering the content of the report is not permitted without the written authorization of AGC. The test results presented in the report apply only to the tested sample. Any objections to report issued by AGC should be submitted to AGC within 15days after the issuance of the test report. Further enquiry of validity or verification of the test report should be addressed to AGC by agc@agc-cert.com.

Attestation of Global Compliance(Shenzhen)Co., Ltd
Attestation of Global Compliance(Shenzhen)Std & Tech Co., Ltd
Tel: +86-755 2523 4088 E-mail: agc@agc-cert.com Web: http://cn.agc-cert.com/

TABLE OF CONTENTS

1. VERIFICATION OF CONFORMITY 4
2. SYSTEM DESCRIPTION 5
3. MEASUREMENT UNCERTAINTY 6
4. PRODUCT INFORMATION 7
5. SUPPORT EQUIPMENT 8
6. TEST FACILITY 9
6. TEST ITEMS AND THE RESULTS 10
7. FCCLINE CONDUCTED EMISSION TEST 11
7.1. LIMITS OF LINE CONDUCTED EMISSION TEST 11
7.2. BLOCK DIAGRAM OF TEST SETUP 11
7.3. PROCEDURE OF LINE CONDUCTED EMISSION TEST 12
7.4. TEST RESULT OF LINE CONDUCTED EMISSION TEST 13
8. FCC RADIATED EMISSION TEST 15
8.1. EXCEPT FOR CLASS A DIGITAL DEVICES, THE FIELD STRENGTH OF RADIATED EMISSIONS FROM UNINTENTIONAL RADIATORS AT A DISTANCE OF 3 METERS SHALL NOT EXCEED THE FOLLOKODAK G VALUES: 15
8.2. BLOCK DIAGRAM OF TEST SETUP 16
8.3. PROCEDURE OF RADIATED EMISSION TEST 17
8.4. TEST RESULT OF RADIATED EMISSION TEST 18
APPENDIX A: PHOTOGRAPHS OF TEST SETUP 22
APPENDIX B: PHOTOGRAPHS OF EUT 24

Any report having not been signed by authorized approver, or having been altered without authorization, or having not been stamped by the "Dedicated Testing/Inspection Stamp" is deemed to be invalid. Copying or excerpting portion of, or altering the content of the report is not permitted without the written authorization of AGC. The test results presented in the report apply only to the tested sample. Any objections to report issued by AGC should be submitted to AGC within 15days after the issuance of the test report. Further enquiry of validity or verification of the test report should be addressed to AGC by agc@agc-cert.com.

1. VERIFICATION OF CONFORMITY

Applicant	Smartech,C.A..
Address	Manongo Avenue with Palma Real Street,C.C. Via Veneto,Milan Level,M32 Local,Manongo
Manufacturer	Smartech,C.A..
Address	Manongo Avenue with Palma Real Street,C.C. Via Veneto,Milan Level,M32 Local,Manongo
Factory	Smartech,C.A..
Address	Manongo Avenue with Palma Real Street,C.C. Via Veneto,Milan Level,M32 Local,Manongo
Product Designation	Smartphone
Brand Name	Win
Test Model	M5+
Hardware Version	J517D_63_32EMB_D3EFV1.0
Software Version	Win_M5plus_V1.0_20201027
Date of test	Oct. 10, 2020~Oct. 27, 2020
Deviation	No any deviation from the test method.
Condition of Test Sample	Normal
Report Template	AGCRT-US-IT/AC

The above equipment was tested by Attestation of Global Compliance (Shenzhen) Co., Ltd. for compliance with the requirements set forth in the FCC Rules and Regulations Part 15, the measurement procedure according to ANSI C63.4:2014. This said equipment in the configuration described in this report shows the maximum emission levels emanating from equipment are within the compliance requirements.
The test results of this report relate only to the tested sample identified in this report.

Prepared By	Donjon Huang (Project Engineer)	Oct. 27, 2020
Reviewed By	Max Zhang (Reviewer)	Oct. 27, 2020
Approved By	Forrest Lei (Authorized Officer)	Oct. 27, 2020

Any report having not been signed by authorized approver, or having been altered without authorization, or having not been stamped by the "Dedicated Testing/Inspection Stamp" is deemed to be invalid. Copying or excerpting portion of, or altering the content of the report is not permitted without the written authorization of AGC. The test results presented in the report apply only to the tested sample. Any objections to report issued by AGC should be submitted to AGC within 15days after the issuance of the test report. Further enquiry of validity or verification of the test report should be addressed to AGC by agc@agc-cert.com.

Attestation of Global Compliance(Shenzhen)Co., Ltd
Attestation of Global Compliance(Shenzhen)Std & Tech Co., Ltd
Tel: +86-755 2523 4088 E-mail: agc@agc-cert.com Web: http://cn.agc-cert.com/

2. SYSTEM DESCRIPTION

EUT test procedure:

1. Connect EUT and peripheral devices (PC) through USB port.
2. Power on the EUT, use the software to transfer data between EUT and PC.
3. Make sure the EUT operates normally during the test.

Test Mode

TEST MODE DESCRIPTION		
NO.	**TEST MODE DESCRIPTION**	**WORST**
1	USB (connection for data transferring)	V
Note: 1. V means EMI worst mode		

Any report having not been signed by authorized approver, or having been altered without authorization, or having not been stamped by the "Dedicated Testing/Inspection Stamp" is deemed to be invalid. Copying or excerpting portion of, or altering the content of the report is not permitted without the written authorization of AGC. The test results presented in the report apply only to the tested sample. Any objections to report issued by AGC should be submitted to AGC within 15days after the issuance of the test report. Further enquiry of validity or verification of the test report should be addressed to AGC by agc@agc-cert.com.

Attestation of Global Compliance(Shenzhen)Co., Ltd
Attestation of Global Compliance(Shenzhen)Std & Tech Co., Ltd
Tel: +86-755 2523 4088 E-mail: agc@agc-cert.com Web: http://cn.agc-cert.com/

3. MEASUREMENT UNCERTAINTY

Test	Measurement Uncertainty	Notes
Transmitter power conducted	±0.57 dB	(1)
Transmitter power Radiated	±2.20 dB	(1)
Conducted spurious emission 9KHz-40 GHz	±2.20 dB	(1)
Occupied Bandwidth	±0.01ppm	(1)
Radiated Emission 30~1000MHz	±4.10dB	(1)
Radiated Emission Above 1GHz	±4.32dB	(1)
Conducted Disturbance0.15~30MHz	±3.20dB	(1)

Note: This uncertainty represents an expanded uncertainty expressed at approximately the 95% confidence level using a coverage factor of k=2.

Any report having not been signed by authorized approver, or having been altered without authorization, or having not been stamped by the "Dedicated Testing/Inspection Stamp" is deemed to be invalid. Copying or excerpting portion of, or altering the content of the report is not permitted without the written authorization of AGC. The test results presented in the report apply only to the tested sample. Any objections to report issued by AGC should be submitted to AGC within 15days after the issuance of the test report. Further enquiry of validity or verification of the test report should be addressed to AGC by agc@agc-cert.com.

Attestation of Global Compliance(Shenzhen)Co., Ltd
Attestation of Global Compliance(Shenzhen)Std & Tech Co., Ltd
Tel: +86-755 2523 4088 E-mail: agc@agc-cert.com Web: http://cn.agc-cert.com/

4. PRODUCT INFORMATION

Housing Type	Plastic and metal
EUT Input Rating	DC 3.8V by battery or DC 5V by adapter.

I/O Port Information (☒Applicable ☐Not Applicable)

I/O Port of EUT			
I/O Port Type	**Number**	**Specific**	**Tested With**
USB Port	1	0.8 Unshielded	1
Earphone	1	0.8 Unshielded	1

Any report having not been signed by authorized approver, or having been altered without authorization, or having not been stamped by the "Dedicated Testing/Inspection Stamp" is deemed to be invalid. Copying or excerpting portion of, or altering the content of the report is not permitted without the written authorization of AGC. The test results presented in the report apply only to the tested sample. Any objections to report issued by AGC should be submitted to AGC within 15days after the issuance of the test report. Further enquiry of validity or verification of the test report should be addressed to AGC by agc@agc-cert.com.

5. SUPPORT EQUIPMENT

Device Type	Manufacturer	Model Name	Serial No.	Data Cable	Power Cable
PC	Xiaomi Inc.	--	--	--	--
Adapter	Xiaomi Inc.	--	--	--	1.25m Unshielded

Note: All the above equipment/cables were placed in worse case positions to maximize emission signals during emission test.

Any report having not been signed by authorized approver, or having been altered without authorization, or having not been stamped by the "Dedicated Testing/Inspection Stamp" is deemed to be invalid. Copying or excerpting portion of, or altering the content of the report is not permitted without the written authorization of AGC. The test results presented in the report apply only to the tested sample. Any objections to report issued by AGC should be submitted to AGC within 15days after the issuance of the test report. Further enquiry of validity or verification of the test report should be addressed to AGC by agc@agc-cert.com.

Attestation of Global Compliance(Shenzhen)Co., Ltd
Attestation of Global Compliance(Shenzhen)Std & Tech Co., Ltd
Tel: +86-755 2523 4088 E-mail: agc@agc-cert.com Web: http://cn.agc-cert.com/

6. TEST FACILITY

Test Site	Attestation of Global Compliance (Shenzhen) Co., Ltd
Location	1-2/F, Building 19, Junfeng Industrial Park, Chongqing Road, Heping Community, Fuhai Street, Bao'an District, Shenzhen, Guangdong,China
Designation Number	CN1259
FCC Test Firm Registration Number	975832
A2LA Cert. No.	5054.02
Description	Attestation of Global Compliance(Shenzhen) Co., Ltd is accredited by A2LA

TEST EQUIPMENT OF CONDUCTED EMISSION TEST

Equipment	Manufacturer	Model	S/N	Cal. Date	Cal. Due
TEST RECEIVER	R&S	ESPI	101206	May 15, 2020	May 14, 2021
LISN	R&S	ESH2-Z5	100086	Jul. 03, 2020	Jul. 02, 2021

TEST EQUIPMENT OF RADIATED EMISSION TEST

Equipment	Manufacturer	Model	S/N	Cal. Date	Cal. Due
TEST RECEIVER	R&S	ESCI	10096	May 15, 2020	May 14, 2021
EXA Signal Analyzer	Aglient	N9010A	MY53470504	Dec. 12, 2019	Dec. 11, 2020
Horn antenna	SCHWARZBECK	BBHA 9170	768	Sep. 09, 2019	Sep. 08, 2021
preamplifier	ChengYi	EMC184045SE	980508	Sep.18, 2020	Sep.17, 2021
Double-Ridged Waveguide Horn	ETS LINDGREN	3117	00034609	May.18, 2019	May.17, 2021
Broadband Preamplifier	SCHWARZBECK	BBV 9718	9718-205	Jun. 10, 2020	Jun. 09, 2021
ANTENNA	SCHWARZBECK	VULB9168	D69250	Sep.20, 2019	Sep.19, 2021

Any report having not been signed by authorized approver, or having been altered without authorization, or having not been stamped by the "Dedicated Testing/Inspection Stamp" is deemed to be invalid. Copying or excerpting portion of, or altering the content of the report is not permitted without the written authorization of AGC. The test results presented in the report apply only to the tested sample. Any objections to report issued by AGC should be submitted to AGC within 15days after the issuance of the test report. Further enquiry of validity or verification of the test report should be addressed to AGC by agc@agc-cert.com.

6. TEST ITEMS AND THE RESULTS

Test item	Test Requirement	Test Method	Class/Severity	Result
CONDUCTED EMISSION	FCC Part 15.107 Rules	ANSI C63.4:2014	Class B	Pass
RADIATED EMISSION	FCC Part 15.109 Rules	ANSI C63.4:2014	Class B	Pass

Any report having not been signed by authorized approver, or having been altered without authorization, or having not been stamped by the "Dedicated Testing/Inspection Stamp" is deemed to be invalid. Copying or excerpting portion of, or altering the content of the report is not permitted without the written authorization of AGC. The test results presented in the report apply only to the tested sample. Any objections to report issued by AGC should be submitted to AGC within 15days after the issuance of the test report. Further enquiry of validity or verification of the test report should be addressed to AGC by agc@agc-cert.com.

Attestation of Global Compliance(Shenzhen)Co., Ltd
Attestation of Global Compliance(Shenzhen)Std & Tech Co., Ltd
Tel: +86-755 2523 4088 E-mail: agc@agc-cert.com Web: http://cn.agc-cert.com/

7. FCCLINE CONDUCTED EMISSION TEST

7.1. LIMITS OF LINE CONDUCTED EMISSION TEST

Frequency	Maximum RF Line Voltage	
	Q.P.(dBuV)	Average(dBuV)
150kHz-500kHz	66-56	56-46
500kHz-5MHz	56	46
5MHz-30MHz	60	50

Note:
1. The lower limit shall apply at the transition frequency.
2. The limit decreases linearly with the logarithm of the frequency in the range 0.15 MHz to 0.50MHz.

7.2. BLOCK DIAGRAM OF TEST SETUP

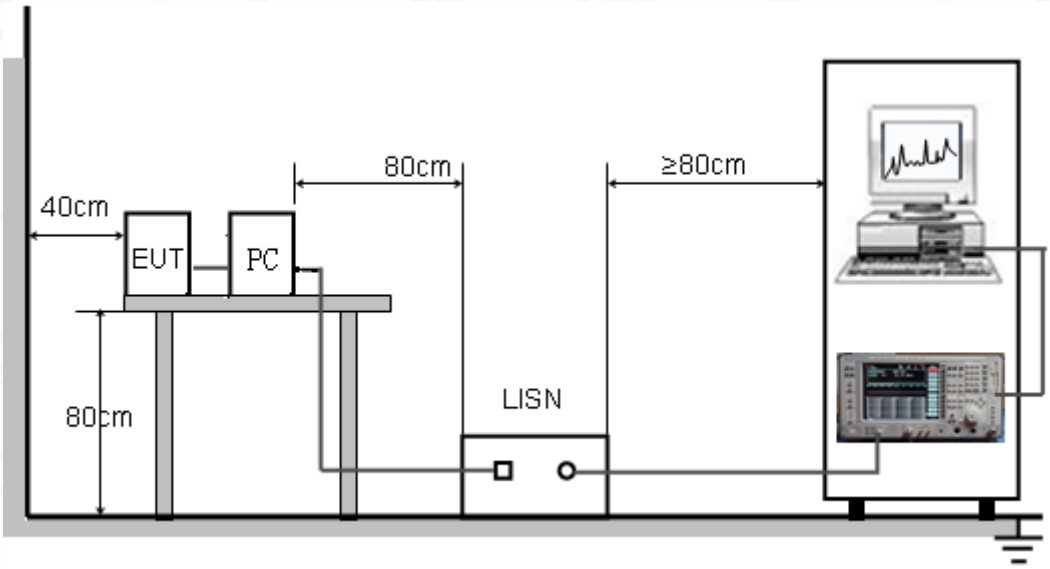

Any report having not been signed by authorized approver, or having been altered without authorization, or having not been stamped by the "Dedicated Testing/Inspection Stamp" is deemed to be invalid. Copying or excerpting portion of, or altering the content of the report is not permitted without the written authorization of AGC. The test results presented in the report apply only to the tested sample. Any objections to report issued by AGC should be submitted to AGC within 15days after the issuance of the test report. Further enquiry of validity or verification of the test report should be addressed to AGC by agc@agc-cert.com.

7.3. PROCEDURE OF LINE CONDUCTED EMISSION TEST

(1) The equipment was set up as per the test configuration to simulate typical actual usage per the user's manual. When the EUT is a tabletop system, a wooden table with a height of 0.8 meters is used and is placed on the ground plane as per ANSI C63.4 (see Test Facility for the dimensions of the ground plane used). When the EUT is a floor-standing equipment, it is placed on the ground plane which has a 3-12 mm non-conductive covering to insulate the EUT from the ground plane.

(2) Support equipment, if needed, was placed as per ANSI C63.4.

(3) All I/O cables were positioned to simulate typical actual usage as per ANSI C63.4.

(4) The EUT received DC 5V power from PC with receive AC120V/60Hz power from a LISN.

(5) The EUT test program was started. Emissions were measured on each current carrying line of the EUT using a spectrum Analyzer / Receiver connected to the LISN powering the EUT. The LISN has two monitoring points: Line 1 (Hot Side) and Line 2 (Neutral Side). Two scans were taken: one with Line 1 connected to Analyzer / Receiver and Line 2 connected to a 50 ohm load; the second scan had Line 1 connected to a 50 ohm load and Line 2 connected to the Analyzer / Receiver.

(6) Analyzer / Receiver scanned from 150 kHz to 30MHz for emissions in each of the test modes.

(7) During the above scans, the emissions were maximized by cable manipulation.

(8) A scan was taken on both power lines, Line 1 and Line 2, recording at least the six highest emissions.

(9) Emission frequency and amplitude were recorded into a computer in which correction factors were used to calculate the emission level and compare reading to the applicable limit. If EUT emission level was less –2dB to the A.V. limit in Peak mode, then the emission signal was re-checked using Q.P and Average detector.

The test data of the worst case condition (mode 1) was reported on the Summary Data page.

Any report having not been signed by authorized approver, or having been altered without authorization, or having not been stamped by the "Dedicated Testing/Inspection Stamp" is deemed to be invalid. Copying or excerpting portion of, or altering the content of the report is not permitted without the written authorization of AGC. The test results presented in the report apply only to the tested sample. Any objections to report issued by AGC should be submitted to AGC within 15days after the issuance of the test report. Further enquiry of validity or verification of the test report should be addressed to AGC by agc@agc-cert.com.

7.4. TEST RESULT OF LINE CONDUCTED EMISSION TEST

LINE CONDUCTED EMISSION TEST-L

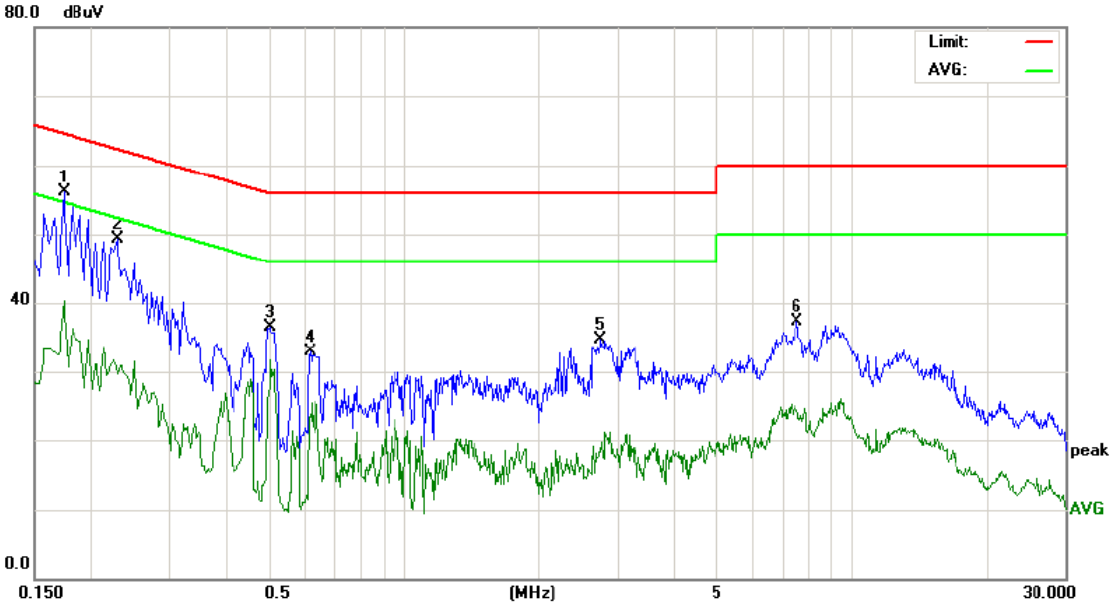

No.	Freq. (MHz)	Reading_Level (dBuV)			Correct Factor	Measurement (dBuV)			Limit (dBuV)		Margin (dB)		P/F	Comment
		Peak	QP	AVG	dB	Peak	QP	AVG	QP	AVG	QP	AVG		
1	0.1740	43.23	37.83	20.93	12.82	56.05	50.65	33.75	64.76	54.76	-14.11	-21.01	P	
2	0.2300	36.44	29.67	16.67	12.92	49.36	42.59	29.59	62.45	52.45	-19.86	-22.86	P	
3	0.5020	22.69	13.62	2.26	13.74	36.43	27.36	16.00	56.00	46.00	-28.64	-30.00	P	
4	0.6180	19.16	16.04	8.91	13.82	32.98	29.86	22.73	56.00	46.00	-26.14	-23.27	P	
5	2.7540	21.25	16.71	2.85	13.41	34.66	30.12	16.26	56.00	46.00	-25.88	-29.74	P	
6	7.5380	23.96	16.11	5.91	13.42	37.38	29.53	19.33	60.00	50.00	-30.47	-30.67	P	

RESULT: PASS

Any report having not been signed by authorized approver, or having been altered without authorization, or having not been stamped by the "Dedicated Testing/Inspection Stamp" is deemed to be invalid. Copying or excerpting portion of, or altering the content of the report is not permitted without the written authorization of AGC. The test results presented in the report apply only to the tested sample. Any objections to report issued by AGC should be submitted to AGC within 15days after the issuance of the test report. Further enquiry of validity or verification of the test report should be addressed to AGC by agc@agc-cert.com.

Attestation of Global Compliance(Shenzhen)Co., Ltd
Attestation of Global Compliance(Shenzhen)Std & Tech Co., Ltd
Tel: +86-755 2523 4088 E-mail: agc@agc-cert.com Web: http://cn.agc-cert.com/

LINE CONDUCTED EMISSION TEST-N

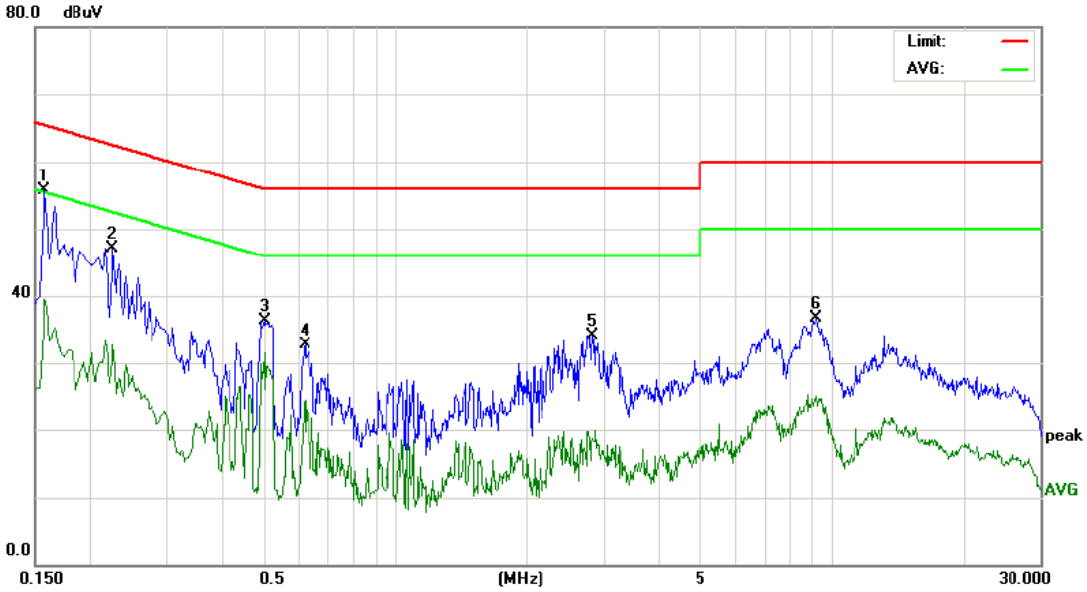

No.	Freq. (MHz)	Reading_Level (dBuV)			Correct Factor	Measurement (dBuV)			Limit (dBuV)		Margin (dB)		P/F	Comment
		Peak	QP	AVG	dB	Peak	QP	AVG	QP	AVG	QP	AVG		
1	0.1580	42.85	39.33	21.83	12.79	55.64	52.12	34.62	65.56	55.56	-13.44	-20.94	P	
2	0.2260	34.22	28.65	15.51	12.91	47.13	41.56	28.42	62.59	52.59	-21.03	-24.17	P	
3	0.5020	22.49	6.24	10.33	13.74	36.23	19.98	24.07	56.00	46.00	-36.02	-21.93	P	
4	0.6220	18.80	13.73	6.30	13.82	32.62	27.55	20.12	56.00	46.00	-28.45	-25.88	P	
5	2.8260	20.78	15.65	2.74	13.37	34.15	29.02	16.11	56.00	46.00	-26.98	-29.89	P	
6	9.2260	23.51	18.45	8.93	13.13	36.64	31.58	22.06	60.00	50.00	-28.42	-27.94	P	

RESULT: PASS

Any report having not been signed by authorized approver, or having been altered without authorization, or having not been stamped by the "Dedicated Testing/Inspection Stamp" is deemed to be invalid. Copying or excerpting portion of, or altering the content of the report is not permitted without the written authorization of AGC. The test results presented in the report apply only to the tested sample. Any objections to report issued by AGC should be submitted to AGC within 15days after the issuance of the test report. Further enquiry of validity or verification of the test report should be addressed to AGC by agc@agc-cert.com.

Attestation of Global Compliance(Shenzhen)Co., Ltd
Attestation of Global Compliance(Shenzhen)Std & Tech Co., Ltd
Tel: +86-755 2523 4088 E-mail: agc@agc-cert.com Web: http://cn.agc-cert.com/

8. FCC RADIATED EMISSION TEST

8.1. EXCEPT FOR CLASS A DIGITAL DEVICES, THE FIELD STRENGTH OF RADIATED EMISSIONS FROM UNINTENTIONAL RADIATORS AT A DISTANCE OF 3 METERS SHALL NOT EXCEED THE FOLLOKodak G VALUES:

Frequency (MHz)	Distance (m)	Maximum Field Strength Limit (dBuV/m/ Q.P.)
30~88	3	40.0
88~216	3	43.5
216~960	3	46.0
Above 960	3	54.0

Note: The lower limit shall apply at the transition frequency.

8.1.1 The following table is the setting of spectrum analyzer and receiver:

Spectrum Parameter	Setting
Start ~Stop Frequency	9KHz~150KHz/RB 200Hz for QP
Start ~Stop Frequency	150KHz~30MHz/RB 9KHz for QP
Start ~Stop Frequency	30MHz~1000MHz/RB 120KHz for QP
Start ~Stop Frequency	1GHz~26.5GHz 1MHz/1MHz for Peak, 1MHz/10Hz for Average

Receiver Parameter	Setting
Start ~Stop Frequency	9KHz~150KHz/RB 200Hz for QP
Start ~Stop Frequency	150KHz~30MHz/RB 9KHz for QP
Start ~Stop Frequency	30MHz~1000MHz/RB 120KHz for QP

Any report having not been signed by authorized approver, or having been altered without authorization, or having not been stamped by the "Dedicated Testing/Inspection Stamp" is deemed to be invalid. Copying or excerpting portion of, or altering the content of the report is not permitted without the written authorization of AGC. The test results presented in the report apply only to the tested sample. Any objections to report issued by AGC should be submitted to AGC within 15days after the issuance of the test report. Further enquiry of validity or verification of the test report should be addressed to AGC by agc@agc-cert.com.

8.2. BLOCK DIAGRAM OF TEST SETUP

System Diagram of Connections between EUT and Simulators

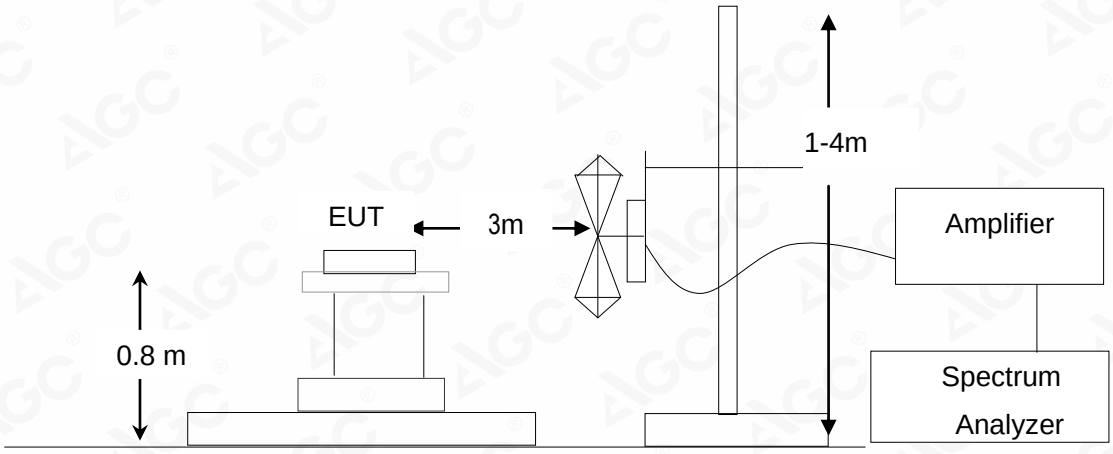

RADIATED EMISSION TEST SETUP ABOVE 1000MHz

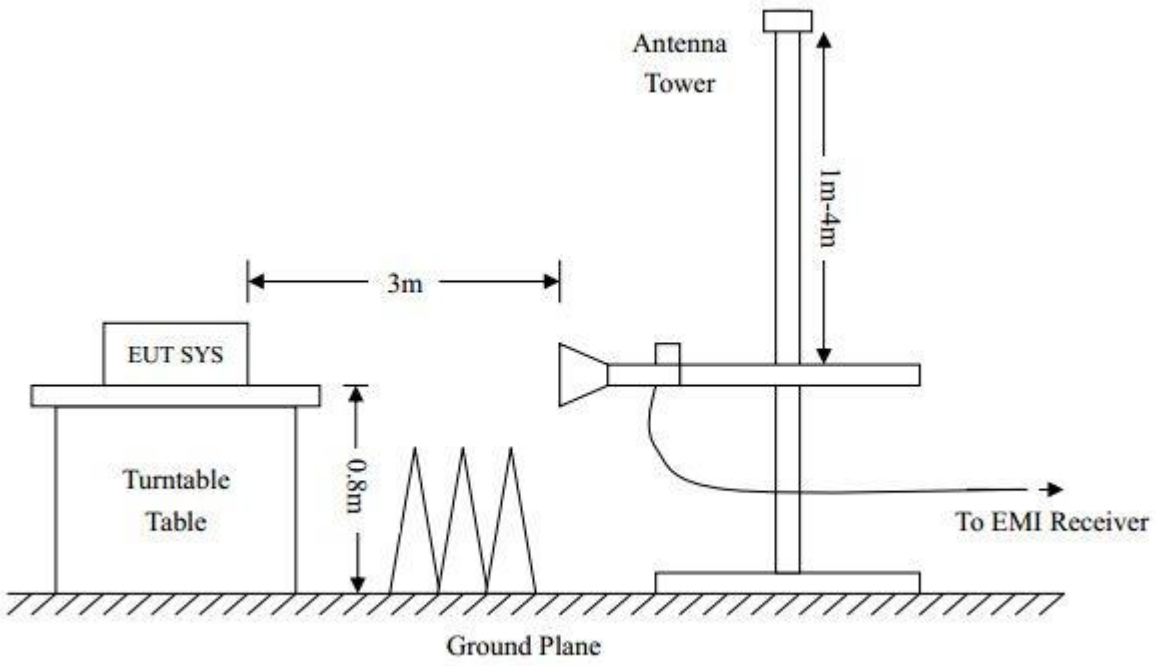

Any report having not been signed by authorized approver, or having been altered without authorization, or having not been stamped by the "Dedicated Testing/Inspection Stamp" is deemed to be invalid. Copying or excerpting portion of, or altering the content of the report is not permitted without the written authorization of AGC. The test results presented in the report apply only to the tested sample. Any objections to report issued by AGC should be submitted to AGC within 15days after the issuance of the test report. Further enquiry of validity or verification of the test report should be addressed to AGC by agc@agc-cert.com.

8.3. PROCEDURE OF RADIATED EMISSION TEST

1. Configure the EUT according to ANSI C63.4. The EUT was placed on the top of the turntable 0.8 meter above ground. The phase center of the receiving antenna mounted on the top of a height-variable antenna tower was placed 3 meters far away from the turntable.
2. Power on the EUT and all the supporting units. The turntable was rotated by 360 degrees to determine the position of the highest radiation.
3. The height of the broadband receiving antenna was varied between one meter and four meters above ground to find the maximum emissions field strength of both horizontal and vertical polarization.
4. For each suspected emissions, the antenna tower was scan (from 1 M to 4 M) and then the turntable was rotated (from 0 degree to 360 degrees) to find the maximum reading.
5. Set the test-receiver system to Peak or CISPR quasi-peak Detect Function with specified bandwidth under Maximum Hold Mode.
6. For emissions above 1GHz, use 1MHz RBW and 3MHz VBW for peak reading. Then 1MHz RBW and 3MHz VBW for average reading in spectrum analyzer. The EUT was placed on the top of the turntable 0.8 meter above ground. The phase center of the receiving antenna mounted on the top of a height-variable antenna tower was placed 3 meters far away from the turntable.
7. When the radiated emissions limits are expressed in terms of the average value of the emissions, and pulsed operation is employed, the measurement field strength shall be determined by averaging over one complete pulse train, including blanking intervals, as long as the pulse train does not exceed 0.1 seconds. As an alternative (provided the transmitter operates for longer than 0.1 seconds) or in cases where the pulse train exceeds 0.1 seconds, the measured field strength shall be determined from the average absolute voltage during a 0.1 second interval during which the field strength is at its maximum values.
8. If the emissions level of the EUT in peak mode was 3 dB lower than the average limit specified, then testing will be stopped and peak values of EUT will be reported, otherwise, the emissions which do not have 3 dB margin will be repeated one by one using the quasi-peak method for below 1GHz.
9. If the emission level of the EUT in peak mode was 10 dB lower than the limit specified, then testing could be stopped and the peak values of the EUT would be reported. Otherwise the emissions that did not have 10 dB margin would be re-tested one by one using peak, quasi-peak or average method as specified and then reported in a data sheet.
10. In case the emission is lower than 30MHz, loop antenna has to be used for measurement and the recorded data should be QP measured by receiver. High - Low scan is not required in this case.
11. The test data of the worst case condition (mode 1) was reported on the Summary Data page.

Any report having not been signed by authorized approver, or having been altered without authorization, or having not been stamped by the "Dedicated Testing/Inspection Stamp" is deemed to be invalid. Copying or excerpting portion of, or altering the content of the report is not permitted without the written authorization of AGC. The test results presented in the report apply only to the tested sample. Any objections to report issued by AGC should be submitted to AGC within 15days after the issuance of the test report. Further enquiry of validity or verification of the test report should be addressed to AGC by agc@agc-cert.com.

8.4. TEST RESULT OF RADIATED EMISSION TEST

RADIATED EMISSION TEST AT 3M DISTANCE-HORIZONTAL

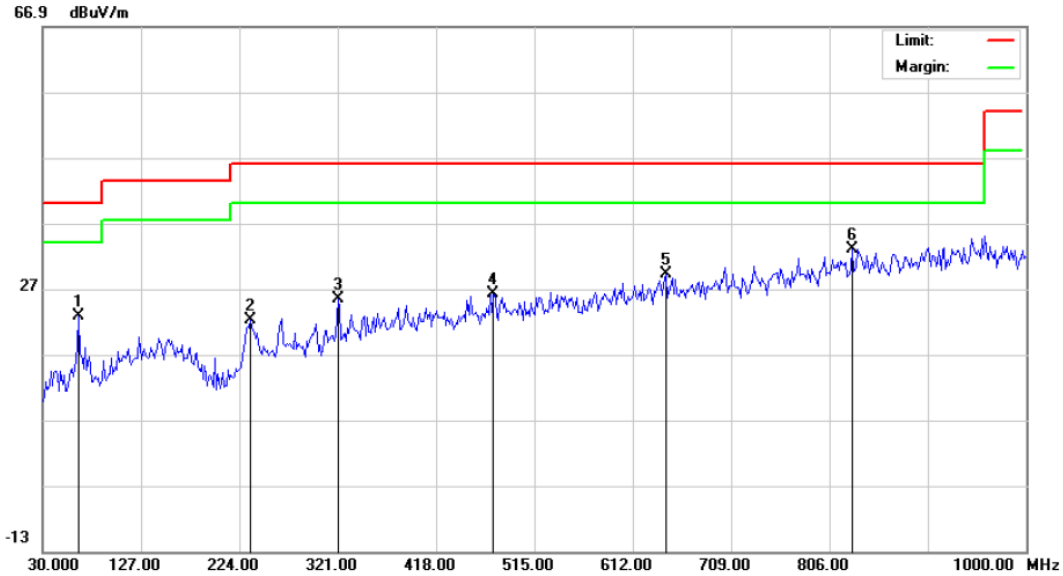

No.	Mk.	Freq.	Reading Level	Correct Factor	Measure-ment	Limit	Over	
		MHz	dBuV	dB	dBuV/m	dBuV/m	dB	Detector
1		65.5667	6.32	16.56	22.88	40.00	-17.12	peak
2		235.3167	4.34	17.86	22.20	46.00	-23.80	peak
3		321.0000	5.24	20.21	25.45	46.00	-20.55	peak
4		474.5833	1.64	24.48	26.12	46.00	-19.88	peak
5		644.3333	1.80	27.48	29.28	46.00	-16.72	peak
6	*	828.6332	2.14	30.78	32.92	46.00	-13.08	peak

RESULT: PASS

Any report having not been signed by authorized approver, or having been altered without authorization, or having not been stamped by the "Dedicated Testing/Inspection Stamp" is deemed to be invalid. Copying or excerpting portion of, or altering the content of the report is not permitted without the written authorization of AGC. The test results presented in the report apply only to the tested sample. Any objections to report issued by AGC should be submitted to AGC within 15days after the issuance of the test report. Further enquiry of validity or verification of the test report should be addressed to AGC by agc@agc-cert.com.

RADIATED EMISSION TEST AT 3M DISTANCE-VERTICAL

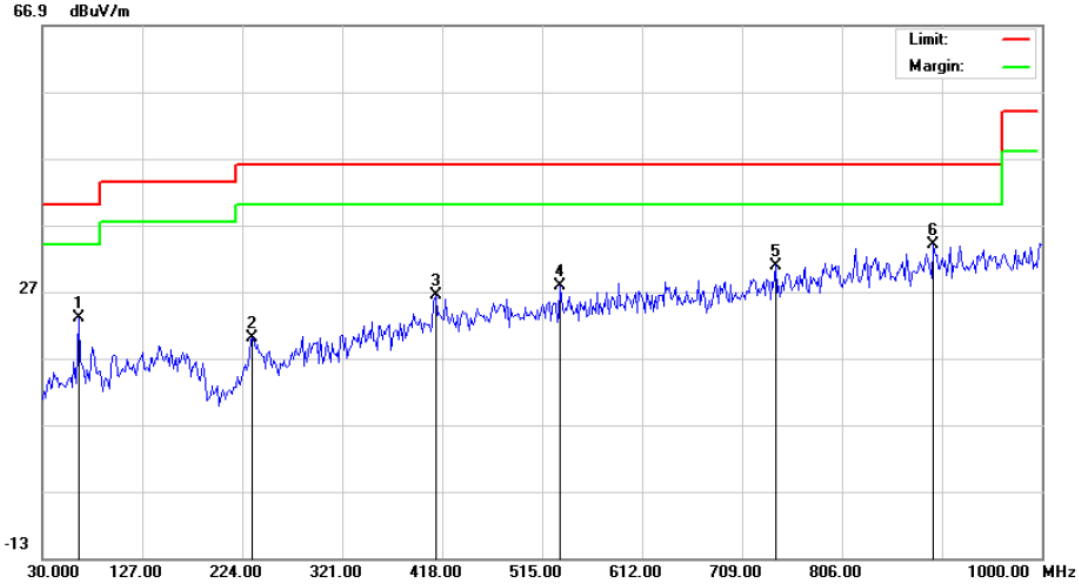

No.	Mk.	Freq.	Reading Level	Correct Factor	Measure-ment	Limit	Over	
		MHz	dBuV	dB	dBuV/m	dBuV/m	dB	Detector
1		65.5667	6.42	16.56	22.98	40.00	-17.02	peak
2		233.7000	2.45	17.58	20.03	46.00	-25.97	peak
3		411.5333	3.17	23.21	26.38	46.00	-19.62	peak
4		532.7833	2.18	25.63	27.81	46.00	-18.19	peak
5		741.3333	1.82	29.08	30.90	46.00	-15.10	peak
6	*	894.9167	2.32	31.63	33.95	46.00	-12.05	peak

RESULT: PASS

Note: 1.Measurement = Reading + Factor, Over = Measurement – Limit.

2. The “Factor” value can be calculated automatically by software of measurement system.

Any report having not been signed by authorized approver, or having been altered without authorization, or having not been stamped by the "Dedicated Testing/Inspection Stamp" is deemed to be invalid. Copying or excerpting portion of, or altering the content of the report is not permitted without the written authorization of AGC. The test results presented in the report apply only to the tested sample. Any objections to report issued by AGC should be submitted to AGC within 15days after the issuance of the test report. Further enquiry of validity or verification of the test report should be addressed to AGC by agc@agc-cert.com.

Attestation of Global Compliance(Shenzhen)Co., Ltd
Attestation of Global Compliance(Shenzhen)Std & Tech Co., Ltd
Tel: +86-755 2523 4088 E-mail: agc@agc-cert.com Web: http://cn.agc-cert.com/

RADIATED EMISSION ABOVE 1GHZ TEST AT 3M DISTANCE –HORIZONTAL

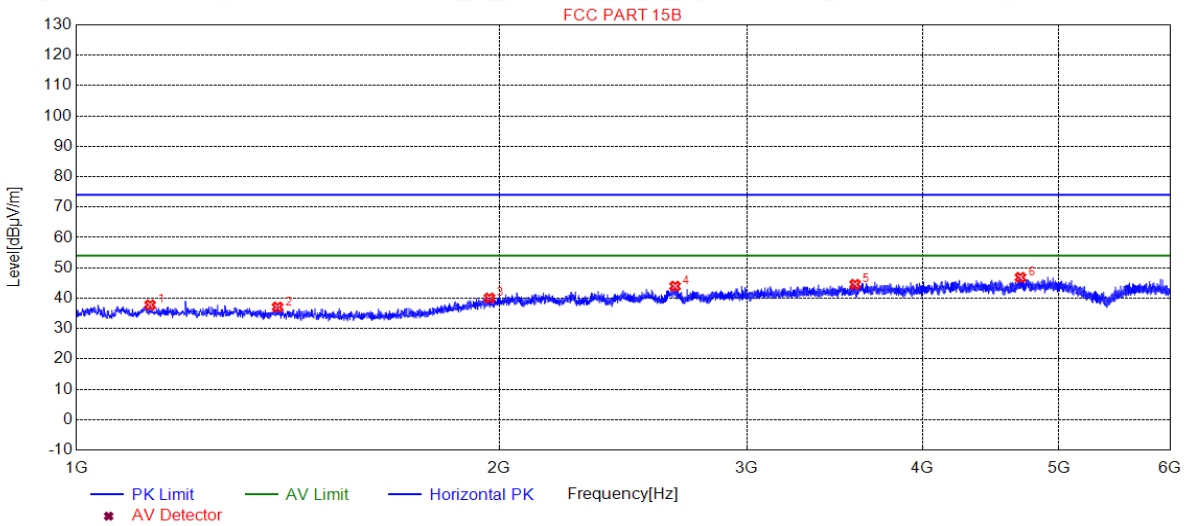

NO.	Freq. [MHz]	Level [dBµV/m]	Factor [dB]	Limit [dBµV/m]	Margin [dB]	Height [cm]	Angle [°]	Polarity
1	1128.5129	37.78	-16.77	74.00	36.22	100	240	Horizontal
2	1390.5391	37.08	-17.02	74.00	36.92	100	140	Horizontal
3	1967.5968	40.05	-12.16	74.00	33.95	100	230	Horizontal
4	2667.1667	43.94	-9.59	74.00	30.06	100	300	Horizontal
5	3582.2582	44.55	-7.42	74.00	29.45	100	210	Horizontal
6	4696.8697	46.85	-5.01	74.00	27.15	100	70	Horizontal

Any report having not been signed by authorized approver, or having been altered without authorization, or having not been stamped by the "Dedicated Testing/Inspection Stamp" is deemed to be invalid. Copying or excerpting portion of, or altering the content of the report is not permitted without the written authorization of AGC. The test results presented in the report apply only to the tested sample. Any objections to report issued by AGC should be submitted to AGC within 15days after the issuance of the test report. Further enquiry of validity or verification of the test report should be addressed to AGC by agc@agc-cert.com.

Attestation of Global Compliance(Shenzhen)Co., Ltd
Attestation of Global Compliance(Shenzhen)Std & Tech Co., Ltd
Tel: +86-755 2523 4088 E-mail: agc@agc-cert.com Web: http://cn.agc-cert.com/

RADIATED EMISSION ABOVE 1GHZ TEST AT 3M DISTANCE –VERTICAL

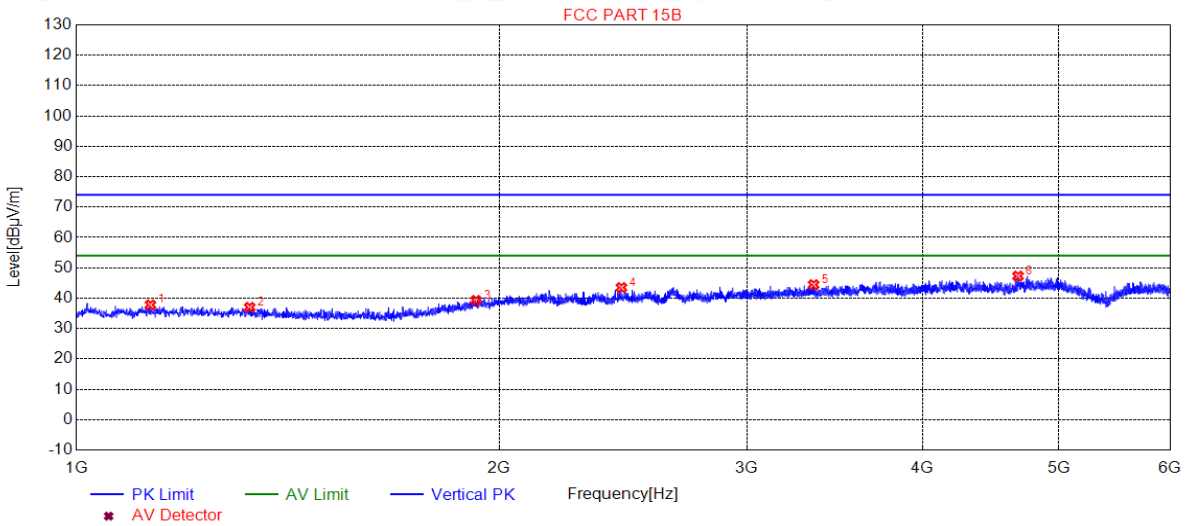

NO.	Freq. [MHz]	Level [dBµV/m]	Factor [dB]	Limit [dBµV/m]	Margin [dB]	Height [cm]	Angle [°]	Polarity
1	1129.0129	37.79	-16.77	74.00	36.21	150	20	Vertical
2	1328.5329	36.99	-16.96	74.00	37.01	150	260	Vertical
3	1924.5925	39.27	-12.62	74.00	34.73	150	160	Vertical
4	2442.6443	43.49	-9.96	74.00	30.51	150	200	Vertical
5	3346.7347	44.44	-8.13	74.00	29.56	150	180	Vertical
6	4678.3678	47.28	-5.03	74.00	26.72	150	160	Vertical

Note: 1. Emissions range from 6GHz to 12.5GHz have 20dB margin. No recording in the test report.
2. Factor=Antenna Factor + Cable loss - Amplifier gain, Margin= Limit-Measurement.
3. The “Factor” value can be calculated automatically by software of measurement system.

Any report having not been signed by authorized approver, or having been altered without authorization, or having not been stamped by the "Dedicated Testing/Inspection Stamp" is deemed to be invalid. Copying or excerpting portion of, or altering the content of the report is not permitted without the written authorization of AGC. The test results presented in the report apply only to the tested sample. Any objections to report issued by AGC should be submitted to AGC within 15days after the issuance of the test report. Further enquiry of validity or verification of the test report should be addressed to AGC by agc@agc-cert.com.

APPENDIX A: PHOTOGRAPHS OF TEST SETUP

FCC LINE CONDUCTED EMISSION TEST SETUP

FCC RADIATED EMISSION TEST SETUP

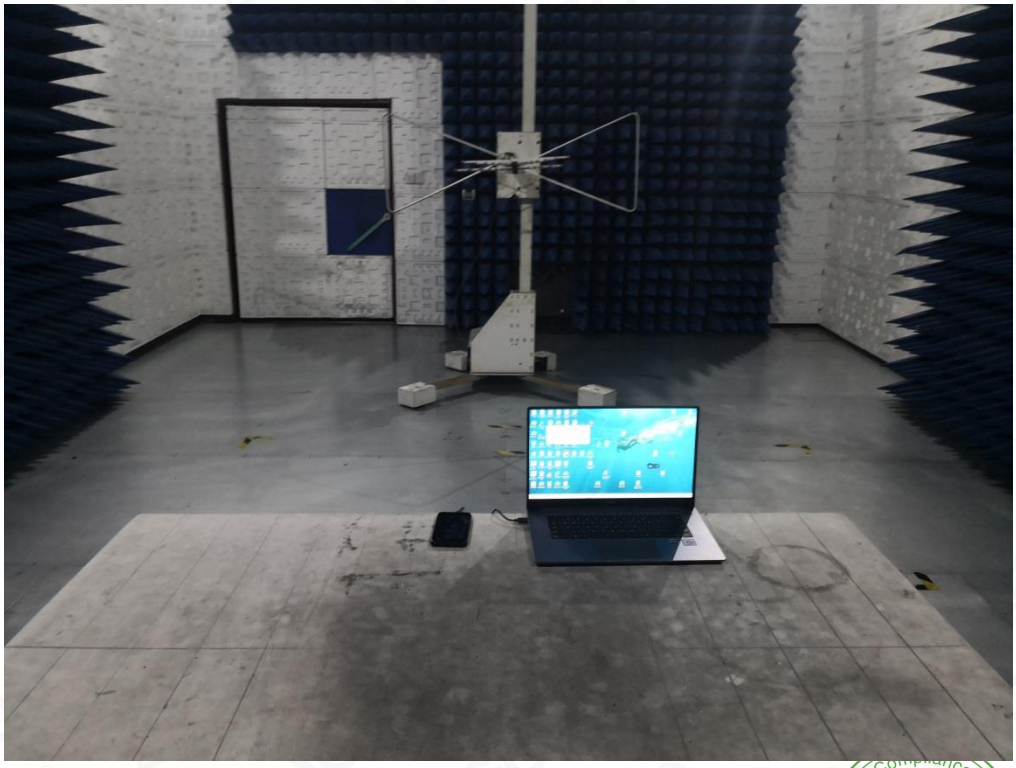

Any report having not been signed by authorized approver, or having been altered without authorization, or having not been stamped by the "Dedicated Testing/Inspection Stamp" is deemed to be invalid. Copying or excerpting portion of, or altering the content of the report is not permitted without the written authorization of AGC. The test results presented in the report apply only to the tested sample. Any objections to report issued by AGC should be submitted to AGC within 15days after the issuance of the test report. Further enquiry of validity or verification of the test report should be addressed to AGC by agc@agc-cert.com.

FCC RADIATED EMISSION TEST SETUP

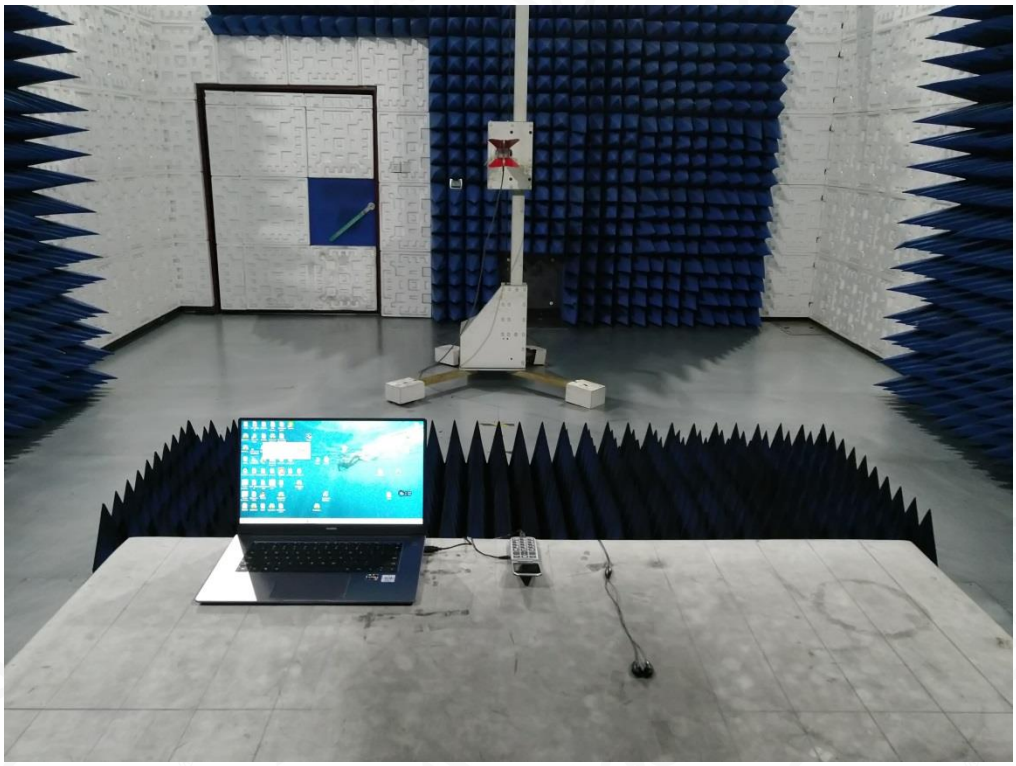

Any report having not been signed by authorized approver, or having been altered without authorization, or having not been stamped by the "Dedicated Testing/Inspection Stamp" is deemed to be invalid. Copying or excerpting portion of, or altering the content of the report is not permitted without the written authorization of AGC. The test results presented in the report apply only to the tested sample. Any objections to report issued by AGC should be submitted to AGC within 15days after the issuance of the test report. Further enquiry of validity or verification of the test report should be addressed to AGC by agc@agc-cert.com.

Attestation of Global Compliance(Shenzhen)Co., Ltd
Attestation of Global Compliance(Shenzhen)Std & Tech Co., Ltd
Tel: +86-755 2523 4088 E-mail: agc@agc-cert.com Web: http://cn.agc-cert.com/

APPENDIX B: PHOTOGRAPHS OF EUT

Refer to the Report No.: AGC00677200901AP01

----END OF REPORT----

Any report having not been signed by authorized approver, or having been altered without authorization, or having not been stamped by the "Dedicated Testing/Inspection Stamp" is deemed to be invalid. Copying or excerpting portion of, or altering the content of the report is not permitted without the written authorization of AGC. The test results presented in the report apply only to the tested sample. Any objections to report issued by AGC should be submitted to AGC within 15days after the issuance of the test report. Further enquiry of validity or verification of the test report should be addressed to AGC by agc@agc-cert.com.

Attestation of Global Compliance(Shenzhen)Co., Ltd
Attestation of Global Compliance(Shenzhen)Std & Tech Co., Ltd
Tel: +86-755 2523 4088 E-mail: agc@agc-cert.com Web: http://cn.agc-cert.com/

Conditions of Issuance of Test Reports

1. All samples and goods are accepted by the Attestation of Global Compliance (Shenzhen) Co., Ltd (the "Company") solely for testing and reporting in accordance with the following terms and conditions. The company provides its services on the basis that such terms and conditions constitute express agreement between the company and any person, firm or company requesting its services (the "Clients").

2. Any report issued by Company as a result of this application for testing services (the "Report") shall be issued in confidence to the Clients and the Report will be strictly treated as such by the Company. It may not be reproduced either in its entirety or in part and it may not be used for advertising or other unauthorized purposes without the written consent of the Company. The Clients to whom the Report is issued may, however, show or send it, or a certified copy thereof prepared by the Company to its customer, supplier or other persons directly concerned. The Company will not, without the consent of the Clients, enter into any discussion or correspondence with any third party concerning the contents of the Report, unless required by the relevant governmental authorities, laws or court orders.

3.The Company shall not be called or be liable to be called to give evidence or testimony on the Report in a court of law without its prior written consent, unless required by the relevant governmental authorities, laws or court orders.

4. The non-CMA report issued by AGC is only permitted to be used by the client as internal reference use and shall not be used for public demonstration purpose.

5. In the event of the improper use of the report as determined by the Company, the Company reserves the right to withdraw it, and to adopt any other additional remedies which may be appropriate.

6. Samples submitted for testing are accepted on the understanding that the Report issued cannot form the basis of, or be the instrument for, any legal action against the Company.

7. The Company will not be liable for or accept responsibility for any loss or damage however arising from the use of information contained in any of its Reports or in any communication whatsoever about its said tests or investigations.

8.Clients wishing to use the Report in court proceedings or arbitration shall inform the Company to that effect prior to submitting the sample for testing.

9. The Company is not responsible for recalling the electronic version of the original report when any revision is made to them. The Client assumes the responsibility to providing the revised version to any interested party who uses them.

10. Subject to the variable length of retention time for test data and report stored hereinto as otherwise specifically required by individual accreditation authorities, the Company will only keep the supporting test data and information of the test report for a period of six years. The data and information will be disposed of after the aforementioned retention period has elapsed. Under no circumstances shall we provide any data and information which has been disposed of after retention period. Under no circumstances shall we be liable for damage of any kind, including (but not limited to) compensatory damages, lost profits, lost data, or any form of special, incidental, indirect, consequential or punitive damages of any kind, whether based on breach of contract of warranty, tort (including negligence), product liability or otherwise, even if we are informed in advance of the possibility of such damages.

Any report having not been signed by authorized approver, or having been altered without authorization, or having not been stamped by the "Dedicated Testing/Inspection Stamp" is deemed to be invalid. Copying or excerpting portion of, or altering the content of the report is not permitted without the written authorization of AGC. The test results presented in the report apply only to the tested sample. Any objections to report issued by AGC should be submitted to AGC within 15days after the issuance of the test report. Further enquiry of validity or verification of the test report should be addressed to AGC by agc@agc-cert.com.

Attestation of Global Compliance(Shenzhen)Co., Ltd
Attestation of Global Compliance(Shenzhen)Std & Tech Co., Ltd
Tel: +86-755 2523 4088 E-mail: agc@agc-cert.com Web: http://cn.agc-cert.com/