TigoAir 2 SOM
Data Sheet

Revision 0.2

December 9, 2020

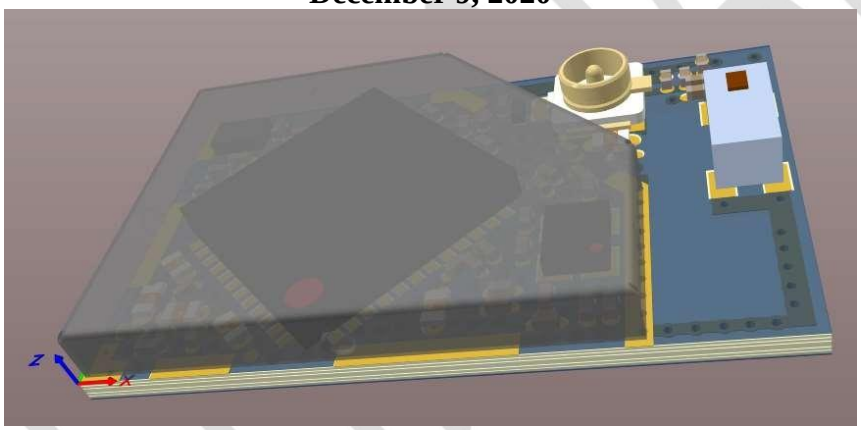

PRELIMINARY

All information presented in this document is confidential and for internal use only.
Copyright © 2019, CoreTigo Ltd.

Approval Table

Role	Name	Version	Date
Written By	Yaniv Yardeni	0.2	09/11/2020
Reviewed By			
Approved By			

Revision Control

Author Name	Description	Revision	Date
Yaniv Yardeni	Creation	0.1	26/03/20
Yaniv Yardeni	Update to BMK's revision	0.2	09/11/20

PRELIMINARY

All information presented in this document is confidential and for internal use only.
Copyright © 2019, CoreTigo Ltd.

Contents

Approval Table 2
Revision Control 2
1 Overview 5
1.1 General Information 5
1.2 Features 5
1.3 Block Diagram 6
2 System Overview 7
2.1 SoC 7
2.2 Antenna 7
2.3 TigoAir 2 SOM Interface 8
2.4 SOM Pinout 9
2.4.1 Pin Definitions 10
2.5 Footprint to SoC Connectivity 11
2.6 USART / SPI 12
2.7 I2C 12
2.8 Timers 12
2.9 Analog Inputs 12
2.10 Analog Outputs 12
2.11 User Interface 13
2.12 GPIO 13
2.13 LESENCE 13
2.14 Programming 13
2.15 Power 13
3 Electrical Characteristics 14
3.1 Absolute Maximum Ratings 14
3.2 Power 14
3.3 Analog 15
3.4 Digital 15
3.5 RF 16
4 SOM Design 17
4.1 Schematics 17
4.1.1 BOM 18
4.2 Assembly 19
4.2.1 Top Assembly 19
4.3 Mechanic 20
4.3.1 SOM Footprint 20
4.3.2 Views 21
4.3.3 Side Views 21
4.3.4 Top View 22
4.3.5 Bottom View 23
4.3.6 Front View 23
4.3.7 Back View 23
5 Literature 24

PRELIMINARY

All information presented in this document is confidential and for internal use only.
Copyright © 2019, CoreTigo Ltd.

6 Contact 24
7 Guidelines and Regulations 25
7.1 RF Exposure Warnings 25
7.2 Class A Warnings 25
7.3 Modification Statements 25
7.4 FCC Regulatory Notices 26
7.5 Limited Modular Approval 26

Figure 1 – TioAir 2 SOM SOM Block Diagram 6
Figure 2 - SOM Pinout 9
Figure 4 – Schematics SoC 17
Figure 5 – Schematics Footprint 18
Figure 6 – Schematics BOM 18
Figure 7 – Top Assembly 19
Figure 8 – SOM Footprint 20
Figure 9 – Side View 2 21
Figure 10 – Top View 22
Figure 11 – Bottom View 23
Figure 12 – Front View 23
Figure 13 – Back View 23

Table 1 - Pin Definitions 10
Table 2 – Footprint to SoC Connectivity 11
Table 13 - Absolute Maximum Ratings 14
Table 14 - Power specifications 14
Table 15 - ADC Characteristics 15
Table 17 - IO Static Characteristics 15
Table 7 – RF Characteristics 16

PRELIMINARY

All information presented in this document is confidential and for internal use only.
Copyright © 2019, CoreTigo Ltd.

1 Overview

This document is a user guide explaining how to integrate TigoAir 2 SOM SOM into ones design for enabling IOLW wireless communication and also low power capabilities.

Disclaimer: This data sheet is preliminary and should be treated as such. Information provided in this document is not final and subjected to change.

1.1 General Information

The TigoAirLP is an integrated System-on-Module (SOM) that enables IO-Link Wireless connectivity for low power industrial applications. It is based on Silicon Labs low power SoC with integrated radio module.

1.2 Features

- EFR32FG13 32bit ARM® Cortex®-M4 Core up to 40MHz with 512KB Flash memory
- 64KB RAM
- Integrated low power radio transceiver for 2.4GHz ISM band
- Option for integrated internal chip antenna (BOM change)
- U.FL connector for external antenna (50Ω)
- 2 x USART
- SPI – Full duplex master\slave
- 2 x I2C buses
- 2 x Timer IO (1 low power timer)
- 2 x ADC inputs (or one differential)
- 2 x DAC outputs
- Dedicated push button input
- Dedicated LED control output
- SWD\ JTAG programming and debug
- 1 x IDAC output
- 3 x GPIO
- 2 x LESENCE (Low-Energy Sensor Interface)

PRELIMINARY

All information presented in this document is confidential and for internal use only.
Copyright © 2019, CoreTigo Ltd.

1.3 Block Diagram

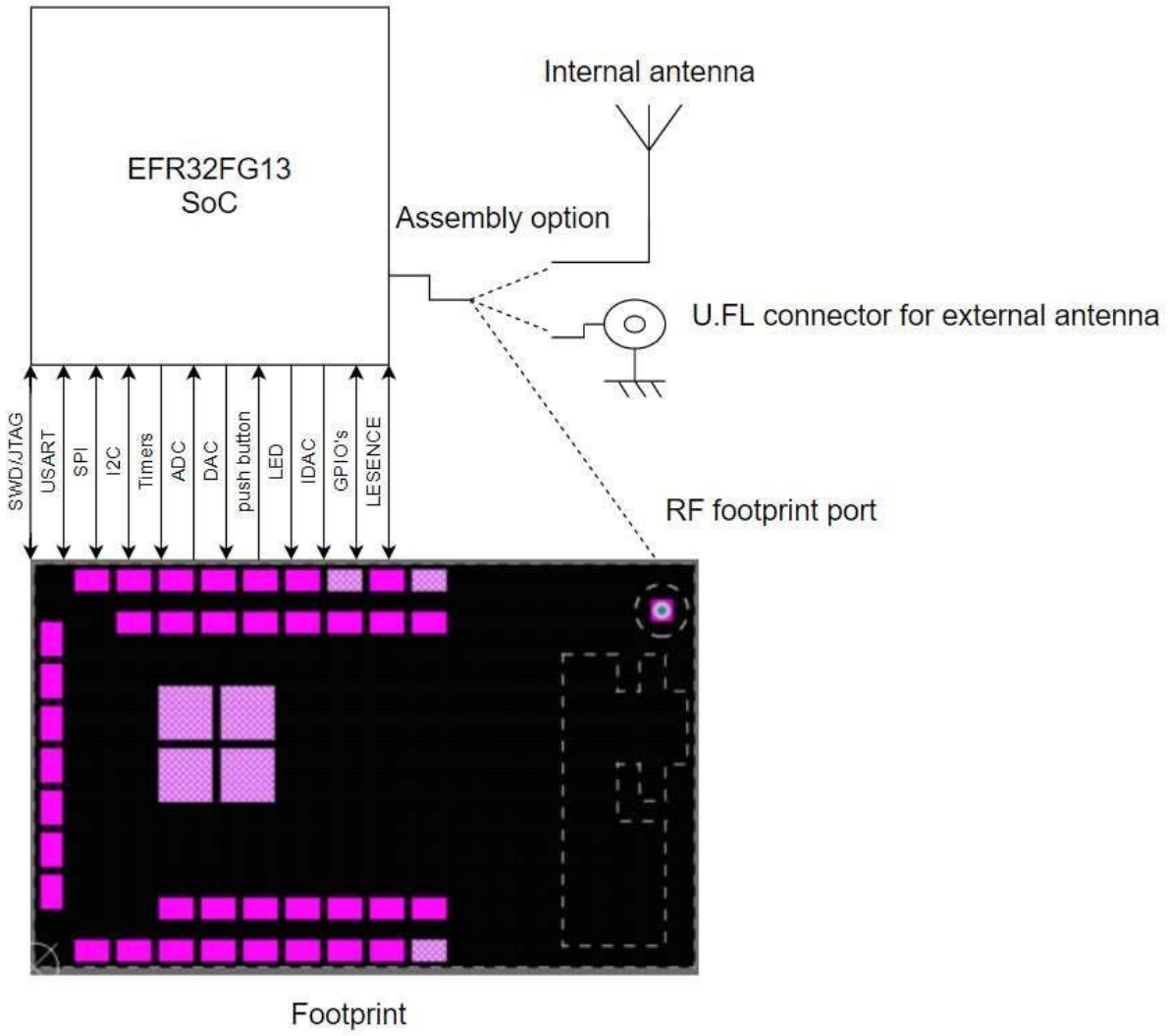

Figure 1 – TioAir 2 SOM SOM Block Diagram

Figure 1 shows a high-level block diagram of the TigoAir 2 SOM wireless SOM. As shown, the primary interface to the TigoAir 2 SOM is through its footprint and from an internal\external antenna or from the footprint RF pad, for wireless communication.
The footprint interface provides power, serial communication, analog inputs and output and other connectivity options.

All information presented in this document is confidential and for internal use only.
Copyright © 2019, CoreTigo Ltd.

2 System Overview

2.1 SoC

The TigoAir 2 SOM SOM uses Silab's EFR32FG13P232F512GM48-D SoC for stack, IOLW radio communication, external interfaces and application development. The EFR32FG13P232F512GM48-D is 32bit ARM® Cortex®-M4 Core MCU, 512KB Flash, 64KB RAM, analog IOs, serial communication interfaces and GPIOs.

For software development, CoreTigo supplies an SDK package that includes: IOLW stack, MCU peripherals usage example, and an example application.

Additional information can be found in EFR32FG13P232F512GM48-D datasheet

2.2 Antenna

The TigoAir 2 SOM supports three options for antenna selection, by different assembly options:

1. On-board U.FL[4] connector for external antenna
2. On-board ceramic chip antenna: Johanson's 2450AT18D0100[2]
3. RF PAD to host board via the footprint

PRELIMINARY

All information presented in this document is confidential and for internal use only.
Copyright © 2019, CoreTigo Ltd.

2.3 TigoAir 2 SOM Interface

TigoAir 2 SOM interfaces are through its footprint on the bottom side of the board.
It contains a total of 45 pads:

- Power – 9 pads (2 VDD, 7 GND)
- Signal – 35 pads (Communication buses, digital IOs, analog inputs, programming, and debug)
- RF – 1 pad (RF transmission to the host board)

The SoC pin-out configuration allows for operation of most pins as GPIOs/Analog inputs/Analog outputs when they are not used with any specific functionality (example: PB13 that is connected to pad '16' can be used as defined - USART1 RX function, or alternatively it can be set to be GPIO). Refer to SoC datasheet for additional information. For changing functionality/ pinout for your application please contact CoreTigo's support.

PRELIMINARY

All information presented in this document is confidential and for internal use only.
Copyright © 2019, CoreTigo Ltd.

2.4 SOM Pinout

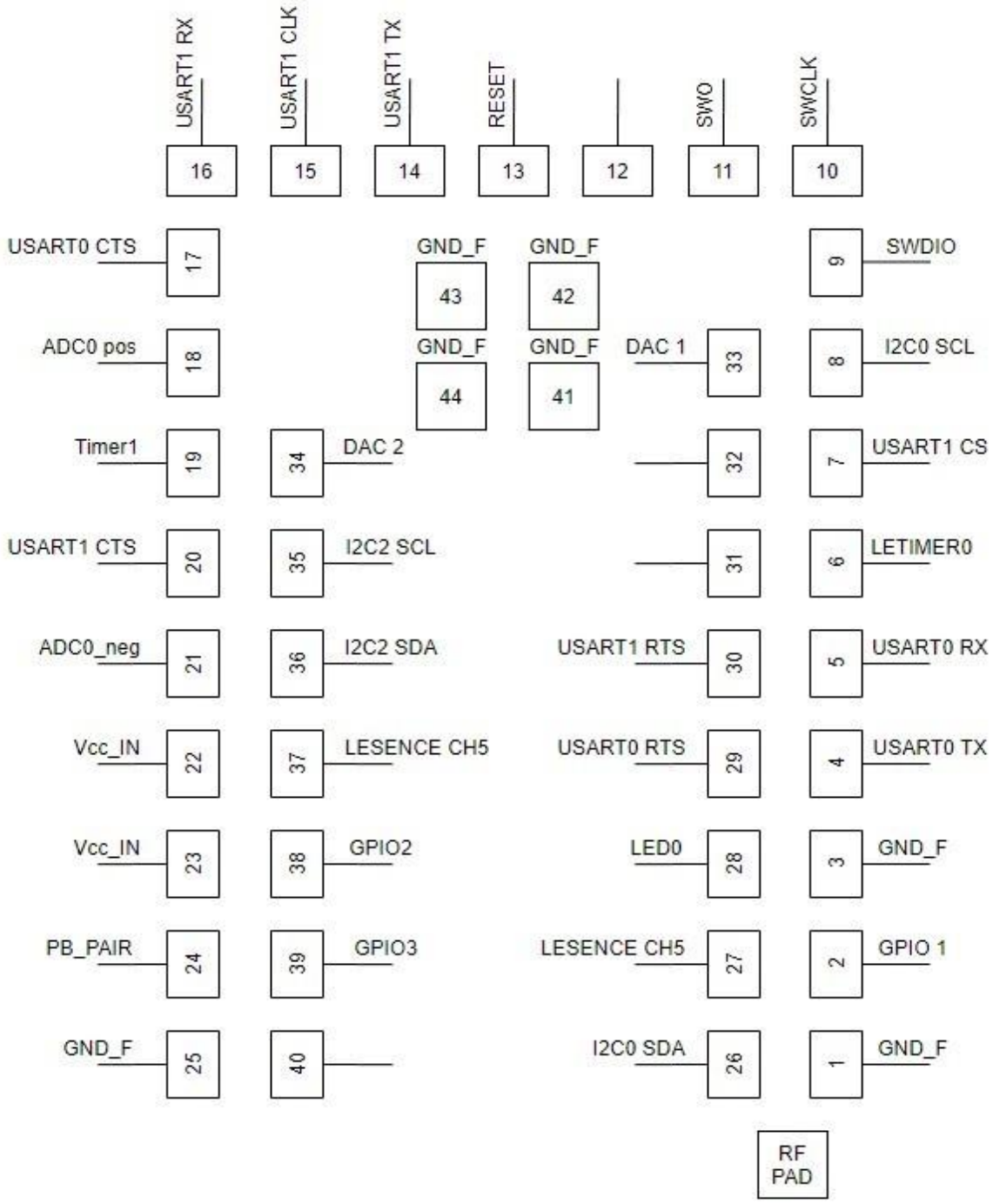

Figure 2 - SOM Pinout

All information presented in this document is confidential and for internal use only.
Copyright © 2019, CoreTigo Ltd.

2.4.1 Pin Definitions

Table 1 - Pin Definitions

Pin #	Name	Description
1	GND_F	GND power supply ground
2	GPIO 1	General purpose Input / output
3	GND_F	GND power supply ground
4	USART0 TX	USART0 Asynchronous transmit / Synchronous mode Master output / Slave input (MOSI)
5	USART0 RX	USART0 Asynchronous receive / Synchronous mode Master input / Slave output (MISO)
6	LETIMER0	Low energy timer output, channel 0
7	USART1 CS	USART1 Chip select input / output
8	I2C0 SCL	I2C0 Serial clock line input / output
9	SWDIO	Serial wire data input / output
10	SWCLK	Serial wire clock input
11	SWO	Serial wire viewer output
12	NC	Not connected
13	RESET	SoC Reset input pin
14	USART1 TX	USART1 Asynchronous transmit / Synchronous mode Master output / Slave input (MOSI)
15	USART1 CLK	USART1 Clock input / output
16	USART1 RX	USART1 Asynchronous receive / Synchronous mode Master input / Slave output (MISO)
17	USART0 CTS	USART0 Clear to send hardware flow control input
18	ADC0 pos	ADC0 Analog to digital external reference input positive pin
19	Timer1	Timer1 Capture compare input / output channel 1
20	USART1 CTS	USART Clear to send hardware flow control input
21	ADC0 neg	ADC0 Analog to digital external reference input negative pin
22	Vcc IN	VCC power supply
23	Vcc IN	VCC power supply
24	PB_PAIR	Push button input active high
25	GND_F	GND power supply ground
26	I2C0 SDA	I2C0 Serial data input / output
27	LESENCE CH5	Low energy sensor interface channel 5
28	LED0	LED control output active low
29	USART0 RTS	USART0 Request to send hardware flow control output
30	USART1 RTS	USART1 Request to send hardware flow control output
31	NC	Not connected
32	NC	Not connected
33	DAC 1	DAC1 Digital to analog voltage convertor output
34	DAC 2	DAC2 Digital to analog voltage convertor output
35	I2C2 SCL	I2C2 Serial clock line input / output
36	I2C2 SDA	I2C2 Serial data input / output
37	LESENCE CH5	Low energy sensor interface channel 5
38	GPIO 2	General purpose Input / output
39	GPIO 3	General purpose Input / output
40	NC	Not connected

PRELIMINARY

All information presented in this document is confidential and for internal use only.
Copyright © 2019, CoreTigo Ltd.

41	GND_F	GND power supply ground
42	GND_F	GND power supply ground
43	GND_F	GND power supply ground
44	GND_F	GND power supply ground
45	RF2p4GHz	RF Port (PAD) - RF transmission to host board (special assembly variant)

2.5 Footprint to SoC Connectivity

The following table describes all the signals on the footprint interface.
If unused, debug pads should be left unconnected (alternatively they can be connected to a test-point\header for debug purposes).

Table 2 – Footprint to SoC Connectivity

SoC Pin Number	SoC Pin Name	Type	Signal Name	TigoAir 2 SOM Pad Number	Main Function
0,14,15,16,37	VSS	Power	GND	1	GND
7	PF6	I/O	GPIO 1	2	GPIO
0,14,15,16,37	VSS	Power	GND	3	GND
25	PA0	Output	USART0 TX	4	USART TX
26	PA1	Input	USART0 RX	5	USART RX
24	PD15	Output	LETIMER0	6	Low Power Timer
36	PB15	Output	USART1 CS	7	USART CS
30	PA5	I/O	I2C0 SCL	8	I2C SCL
2	PF1	I/O	SWDIO	9	SWD I/O
1	PF0	Clock	SWCLK	10	SWD Clock
3	PF2	I/O	SWO	11	SWO
NC	NC	NC	NC	12	Not connected
12	RESETn	Input	RESET	13	SoC Reset
4	PF3	Clock	USART1 TX	14	USART TX
29	PA4	Output	USART1 CLK	15	USART CLK
33	PB13	Input	USART1 RX	16	USART RX
27	PA2	Output	USART0 CTS	17	USART CTS
43	PC6	Input	ADC0 pos	18	ADC
32	PB12	Output	Timer1	19	Timer
5	PF4	Output	USART1 CTS	20	USART CTS
44	PC7	Input	ADC0 neg	21	ADC
9,18,34,39,40-42	VCC	Power	Vcc IN	22	VCC
9,18,34,39,40-42	VCC	Power	Vcc IN	23	VCC
8	PF7	Input	PB_PAIR	24	Pairing button
0,14,15,16,37	VSS	Power	GND	25	GND
31	PB11	I/O	I2C0 SDA	26	I2C Data
22	PD13	I/O	LESENCE CH5	27	LESENCE
23	PD14	Output	LED0	28	LED
28	PA3	Input	USART0 RTS	29	USART RTS
6	PF5	Power	USART1 RTS	30	USART RTS
NC	NC	NC	NC	31	Not connected
NC	NC	NC	NC	32	Not connected
46	PC9	Output	DAC 1	33	DAC
45	PC8	Output	DAC 2	34	DAC

All information presented in this document is confidential and for internal use only.
Copyright © 2019, CoreTigo Ltd.

47	PC10	I/O	I2C2 SCL	35	I2C SCL
48	PC11	I/O	I2C2 SDA	36	I2C Data
22	PD13	I/O	LESENCE CH5	37	LESENCE
19	PD10	Output	GPIO 2	38	GPIO
20	PD11	Output	GPIO 3	39	GPIO
NC	NC	NC	NC	40	Not connected
0,14,15,16,37	VSS	Power	GND	41	GND
0,14,15,16,37	VSS	Power	GND	42	GND
0,14,15,16,37	VSS	Power	GND	43	GND
0,14,15,16,37	VSS	Power	GND	44	GND
17	2G4RF_IOP	Input	RF2p4GHz	45	RF Port (PAD)

2.6 USART / SPI

USART0 and USART1 are used as an external Synchronous/Asynchronous, full duplex serial interface with 2 wires or 4 wires (optional HW flow control) operation. Also, can be used for SPI, RS-485, MicroWire and 3-wire communication protocols.

2.7 I2C

There are 2 separate I2C channels, I2C0 and I2C2, that can be used as an external serial interface. Each of the channels can be configured as master or slave device.

2.8 Timers

Timer1 is a general purpose 16-bit timer.
LETIMER0 is a general purpose. Low power, 16-bit timer
Each timer channel can be configured to use an IO pin for input capture, output compare or PWM functionality.

2.9 Analog Inputs

ADC0 is a 12-bit successive approximation analog to digital converter. Analog to digital conversion of the ADC0 channels can be performed in single, scan or continuous mode. Conversion time depends on configured resolution (6, 8, 10 or 12-bit) and sampling clock frequency. ADC0 inputs can be common mode or differential mode.

2.10 Analog Outputs

DAC1 and DAC 2 are a 12-bit digital to voltage analog converter
DACs outputs can be configured on SoC pins for external components or internally for use in other SoC internal peripherals.
IDAC0 is a 12-bit digital to current analog convertor.

PRELIMINARY

All information presented in this document is confidential and for internal use only.
Copyright © 2019, CoreTigo Ltd.

2.11 User Interface

There are 3 dedicated SoC pins for
1) Push button input (pairing button for IOLW)
2) LED output
3) SoC reset

2.12 GPIO

If some SoC peripherals are not used (for example: No I2C2) then the relevant pads can be used as GPIOs.

2.13 LESENCE

Low energy sensor interface is a configurable sensor interface, capable of supporting a wide range of sensors and measurements schemes.

2.14 Programming

The programming interface of the MCU supports SWD (2 or 3 wire) or JTAG (4 wire) and requires power and reset control.

2.15 Power

The board is operated typically by 3.3V voltage supply.
All power pins of the SoC (DVDD, VREGVDD, AVDD, PAVDD and RFVDD) are connected to the main power supply.

PRELIMINARY

All information presented in this document is confidential and for internal use only.
Copyright © 2019, CoreTigo Ltd.

3 Electrical Characteristics

3.1 Absolute Maximum Ratings

Table 3 - Absolute Maximum Ratings

Symbol	Parameter	Min.	Max.	Unit
VDD	Operating supply voltage	-0.3	3.8	V
V_IN	IO input voltage	-0.3	IOVDD + 0.3	V
V_INA	Analog input voltage	0	3.3	V
I_DD	Operating supply current (sum of all power lines)		200	mA
I_IN	I/O current Sink / source		50	mA
SUM[I_IN]	Sum of all IOs current		200	mA
RF	Antenna input		10	dBm
T_op	Operation temperature	-40	85	°C

3.2 Power

Table 4 - Power specifications

Symbol	Parameter	Min.	Typ.	Max.	Unit
VDD	Operating supply voltage	1.8	3.3	3.8	V
V_IN	IO input voltage	0		VDD	V
I_DD (25°C)	SOM Operating supply current in EM4S mode		0.04	0.085	uA
I_ACTIVE	SOM current consumption in EM0 (all SoC peripherals disabled), 38.4MHz HFRCO (loop from flash)		3.72	4.07	mA

PRELIMINARY

All information presented in this document is confidential and for internal use only.
Copyright © 2019, CoreTigo Ltd.

3.3 Analog

Table 5 - ADC Characteristics

Symbol	Parameter	Min.	Typ.	Max.	Unit
V_REF	Single ended			V_{FS}	V
V_REF+	Positive reference voltage			$V_{FS}/2$	V
V_REF-	Negative reference voltage	$-V_{FS}/2$			V
f_ADC	ADC clock frequency			16	MHz
Throughput rate	12-bit resolution			1	Msps
t_STAB	Power-up time			5	us

3.4 Digital

Table 6 - IO Static Characteristics

Symbol	Parameter	Min.	Typ.	Max.	Unit
V_IL	IO input low level voltage			0.3 x VDD	V
V_IH	IO input high level voltage	0.7 x VDD			V

PRELIMINARY

All information presented in this document is confidential and for internal use only.
Copyright © 2019, CoreTigo Ltd.

Table - Output Voltage Characteristics

Symbol	Parameter	Min.	Typ.	Max.	Unit
V_OL	IO output low level voltage			VCC*0.3	V
V_OH	IO output high level voltage	VCC*0.7			V

3.5 RF

Table 7 – RF Characteristics

Symbol	Parameter	Min.	Typ.	Max.	Unit
PO_MAX	Maximum TX power			10	dBm
FREQ_RANGE	Frequency range	2401		2480	MHz
SENS	10^{-9} PER sensitivity		-90		dBm
BW	Modulation GFSK band width		1		MHz

PRELIMINARY

All information presented in this document is confidential and for internal use only.
Copyright © 2019, CoreTigo Ltd.

4 SOM Design

4.1 Schematics

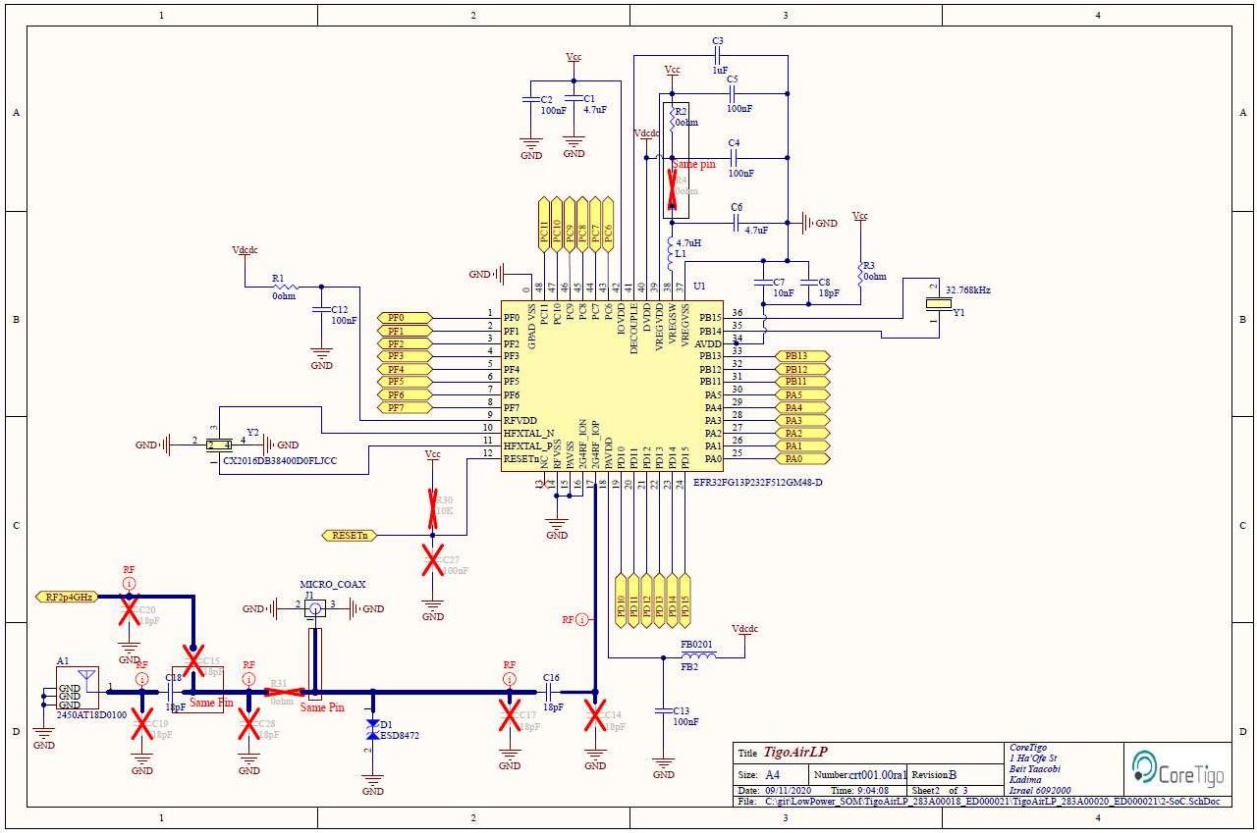

Figure 3 – Schematics SoC

PRELIM

Copyright © 2019, CoreTigo Ltd.

TigoAir 2 SOM

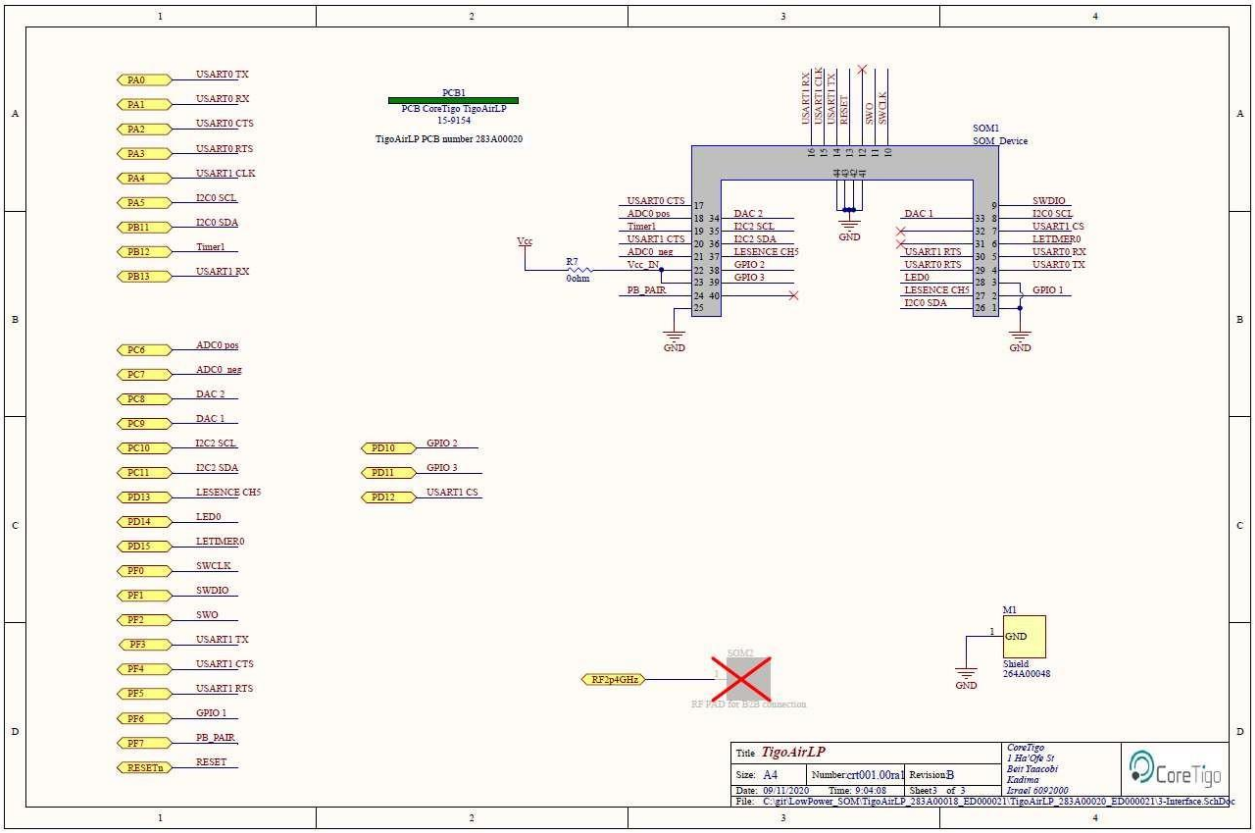

Figure 4 – Schematics Footprint

4.1.1 BOM

	CoreTigo...	Description	Designator	Quantity	Manufacturer 1	Manufacturer Part Num...
1	264A00048	TigoAirLP shield	M1	1	TBD	264A00048
2	283A00020	283A00020 - PCB CoreTigo TigoAirLP	PCB1	1	CoreTigo	283A00020
3	CC000052	BMK 1uF 02-5158 - SMD Capacitor 0201 1...	C3	1	Murata	GRM033R60J105MEA2D
4	CC000053	BMK 4.7uF 02-5204 - SMD Capacitor 0402...	C1, C6	2	Samsung	CL05A475KP5NRNC
5	CC000054	BMK 10nF 02-5310 - SMD Capacitor 0201...	C7	1	TAIYO YUDEN	EMK063B7103KP-F
6	CC000055	BMK 18pF 02-6790 - SMD Capacitor 0201...	C8, C16, C18	3	Murata	GRM033R71E102KA01D
7	CC000056	BMK 100nF 02-5588-3 - SMD Capacitor 02...	C2, C4, C5, C12, C...	5	YAGEO	CC0201KRX5R7BB104
8	CN000053	U.FL Receptacle 50ohm	J1	1	Hirose	U.FL-R-SMT-1(40)
9	DI000027	Ulta low capacitance micro-packaged dio...	D1	1	ON Semi	ESD8472MUT5G
10	IC000057	2.45GHz SMD Antenna, edge mount desi...	A1	1	Johanson	2450AT18D0100
11	IC000062	EFR32FG13 low power SoC, 2.4GHz @ 19...	U1	1	Silicon Labs	EFR32FG13P232F512GM4...
12	IC000068	BMK Crystal 32.768KHz 12.5pF 20ppm -40...	Y1	1	Abracon	ABS05–32.768kHz-T
13	IC000069	BMK SMD Crystal Resonator 40MHz, +-10...	Y2	1	Kyocera	CX2016DB38400D0FLJCC
14	IN000015	BMK 04-7760 - Ferrit 240R@100MHz 200m...	FB2	1	WÜRTH	742692004
15	IN000016	BMK 4.7uH 04-6264 - Spule 4.7µH 20% 0.6...	L1	1	Murata	LQM18PN4R7MFRL
16	RS000091	BMK 0ohm 01-8722 - SMD Resistor 0201 0...	R1, R2, R3, R7	4	YAGEO	RC0201FR-070RL

Figure 5 – Schematics BOM

All information presented in this document is confidential and for internal use only.
Copyright © 2019, CoreTigo Ltd.

4.2 Assembly

4.2.1 Top Assembly

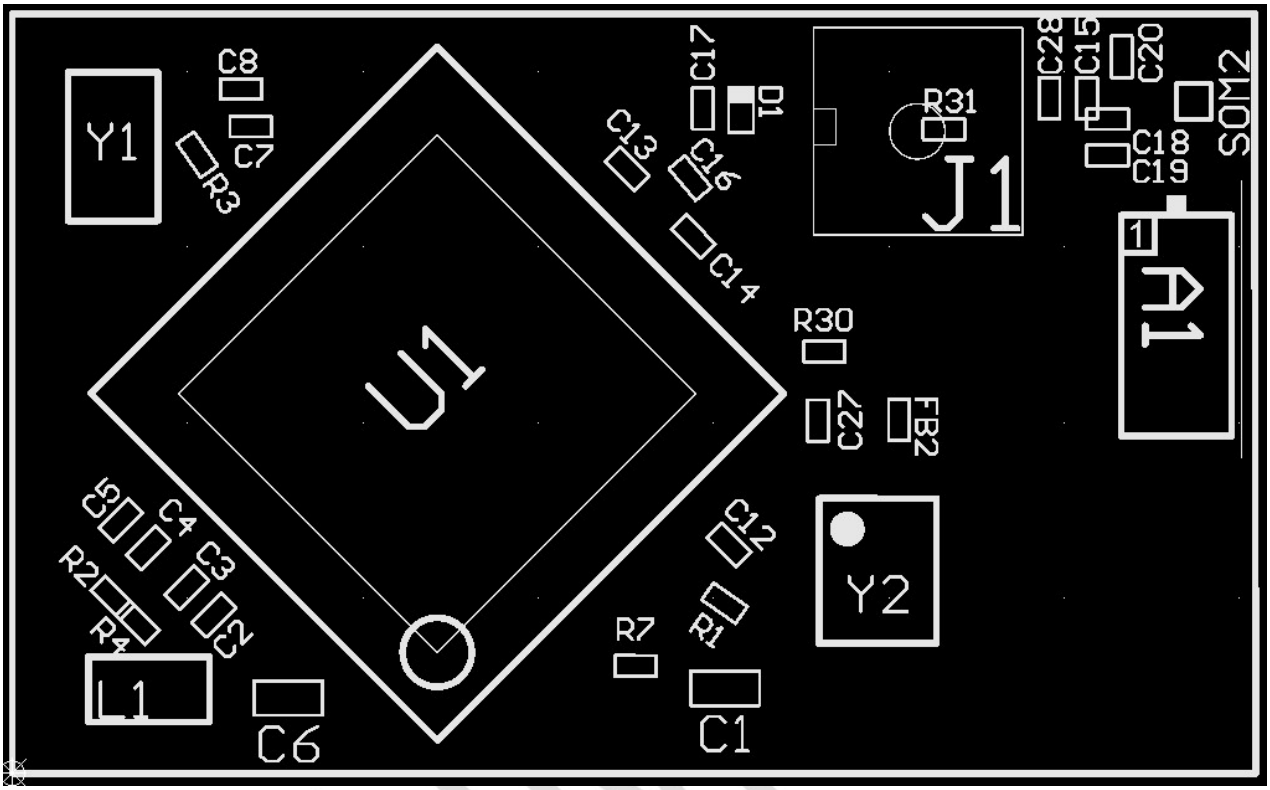

Figure 6 – Top Assembly

PRELIM

All information presented in this document is confidential and for internal use only.
Copyright © 2019, CoreTigo Ltd.

4.3 Mechanic

4.3.1 SOM Footprint

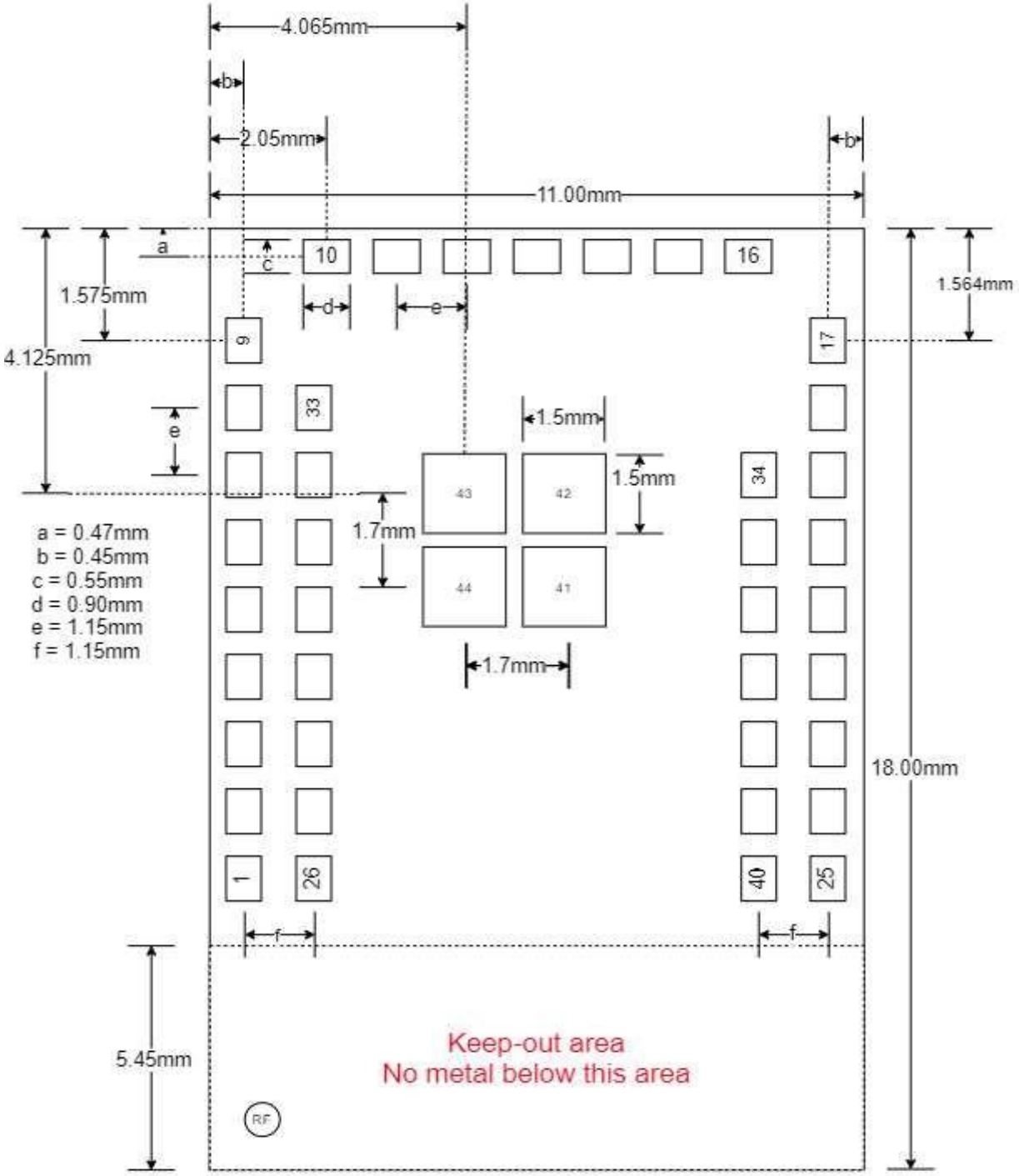

Figure 7 – SOM Footprint

All information presented in this document is confidential and for internal use only.
Copyright © 2019, CoreTigo Ltd.

4.3.2 Views

4.3.3 Side Views

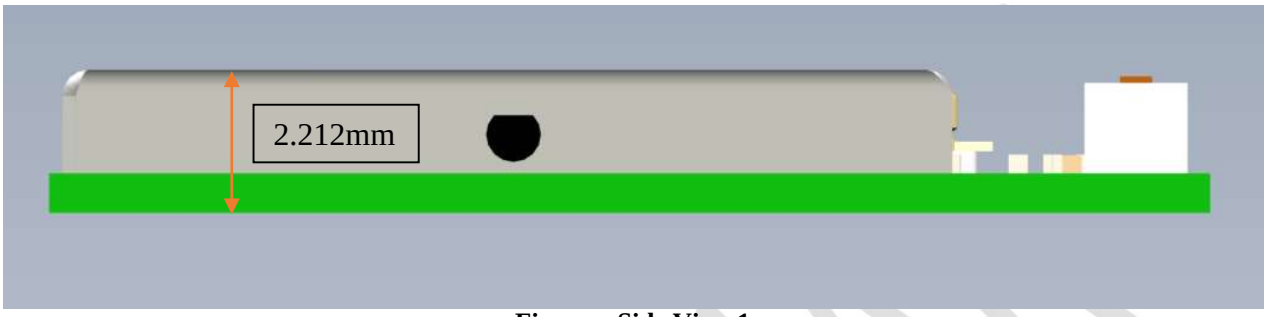

Figure – Side View 1

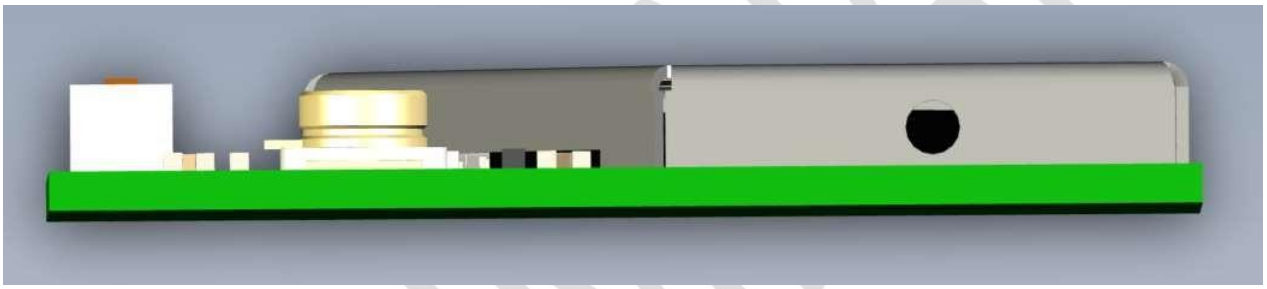

Figure 8 – Side View 2

All information presented in this document is confidential and for internal use only.
Copyright © 2019, CoreTigo Ltd.

4.3.4 Top View

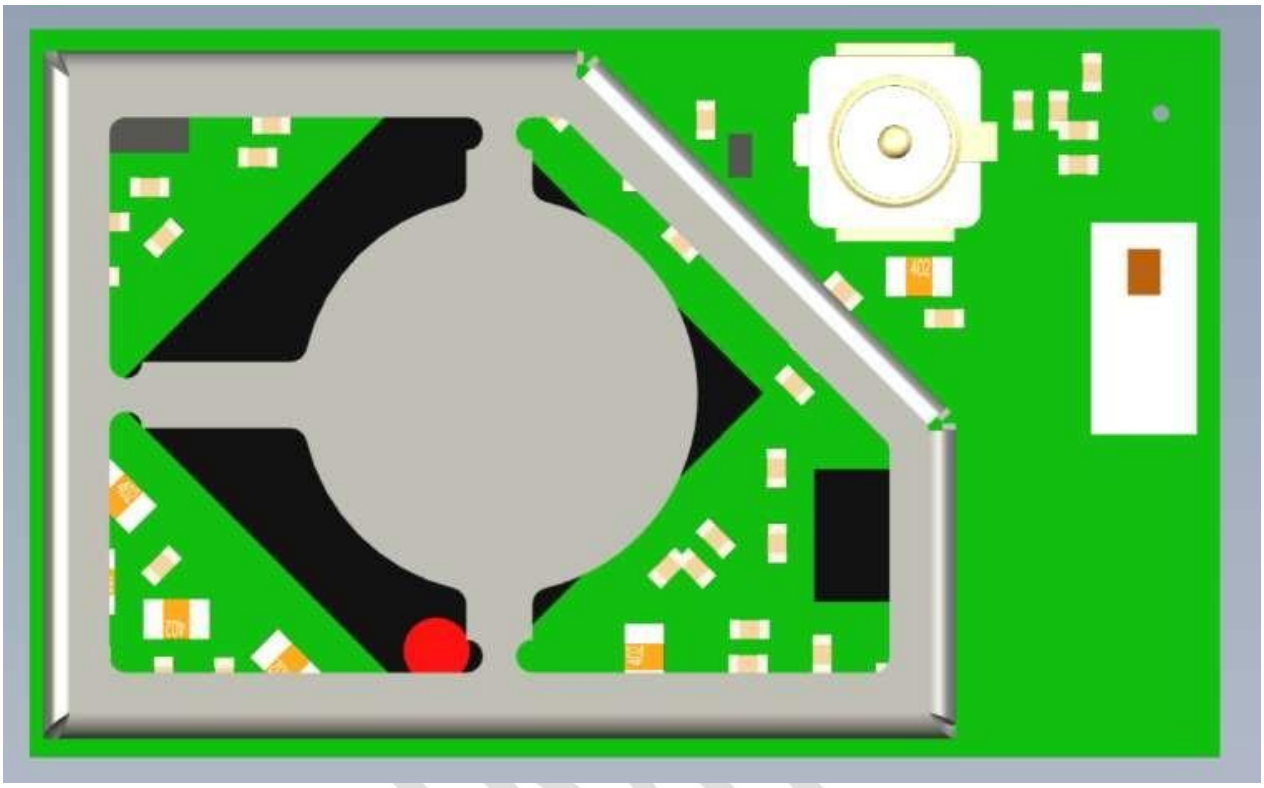

Figure 9 – Top View

PRELIM

All information presented in this document is confidential and for internal use only.
Copyright © 2019, CoreTigo Ltd.

4.3.5 Bottom View

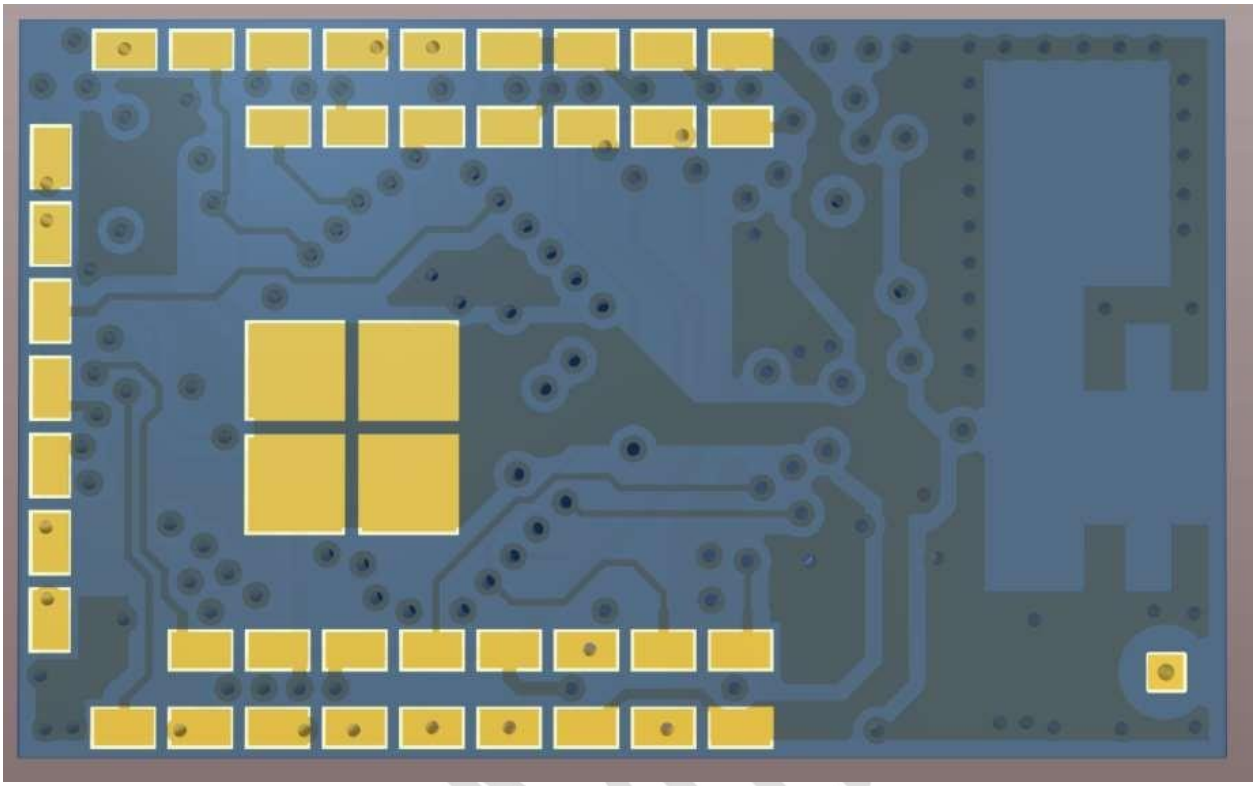

Figure 10 – Bottom View

4.3.6 Front View

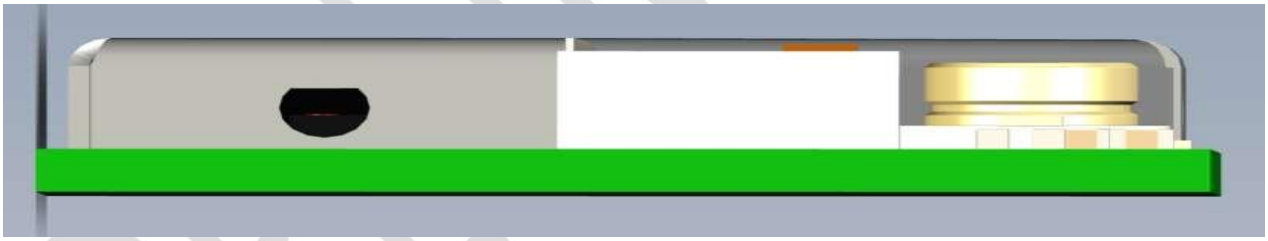

Figure 11 – Front View

4.3.7 Back View

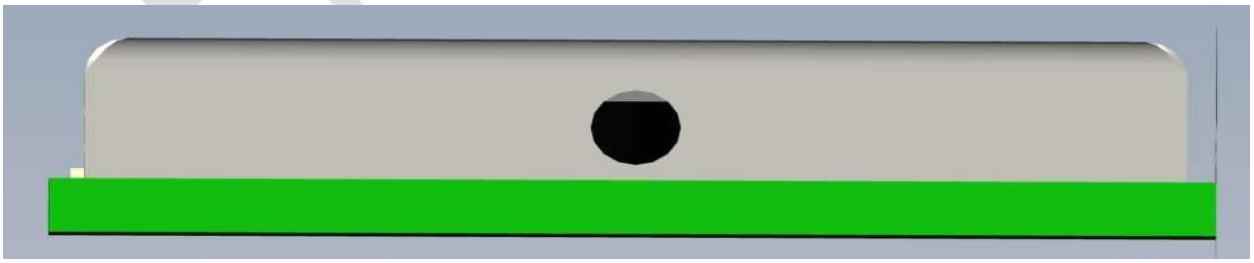

Figure 12 – Back View

All information presented in this document is confidential and for internal use only.
Copyright © 2019, CoreTigo Ltd.

5 Literature

1. Silab SoC EFR32FG13P232F512GM48-D Datasheet [https://www.silabs.com/documents/public/data-sheets/efr32fg13-datasheet.pdf]
2. Johanson Technology 2450AT18D0100 Antenna Datasheet [https://www.johansontechnology.com/datasheets/2450AT18D0100/2450AT18D0100.pdf]

6 Contact

CoreTigo
Sderot Giborei Israel 5
Entrance B, 2nd floor
Netanya
Israel
4250405

PRELIMINARY

All information presented in this document is confidential and for internal use only.
Copyright © 2019, CoreTigo Ltd.

7 Guidelines and Regulations

FCC ID: 2ATSM-TAIR2

7.1 RF Exposure Warnings

This device is only authorized for use in a mobile application. At least 20 cm of separation distance between the TigoAir 2 SOM module and the user's body must always be maintained.

7.2 Class A Warnings

The FCC Wants You to Know

This equipment has been tested and found to comply with the limits for a Class A digital device, pursuant to Part 15 of the FCC rules. These limits are designed to provide reasonable protection against harmful interference when the equipment is operated in a commercial environment.

This equipment generates, uses and can radiate radio frequency energy and, if not installed and used in accordance with the instructions, may cause harmful interference to radio communications.

Operation of this equipment in a residential area is likely to cause harmful interference, in which case the user will be required to correct the interference at his own expense.

7.3 Modification Statements

FCC Warning (Modification statement)

CoreTigo LTD has not approved any changes or modifications to this device by the user. Any changes or modifications could void the user's authority to operate the equipment.

PRELIMINARY

All information presented in this document is confidential and for internal use only.
Copyright © 2019, CoreTigo Ltd.

7.4 FCC Regulatory Notices

Interference statement

This device complies with Part 15 of the FCC Rules. Operation is subject to the following two conditions: (1) this device may not cause interference, and (2) this device must accept any interference, including interference that may cause undesired operation of the device.

Wireless notice

This device complies with FCC radiation exposure limits set forth for an uncontrolled environment and meets the FCC radio frequency (RF) Exposure Guideline. This transmitter must not be co-located or operating in conjunction with any other antenna or transmitter.

7.5 Limited Modular Approval

Regulatory Module Integration Instructions

This module has been granted **Limited Modular Approval** for mobile applications. OEM integrators for host products may use the module in their final products without additional FCC certifications if they meet the following conditions. Otherwise, additional FCC approvals must be obtained.

- The host product with the module installed must be evaluated for simultaneous transmission requirements.
- The user's manual for the host product must clearly indicate the operating requirements and conditions that must be observed to ensure compliance with current FCC RF exposure guidelines.
- To comply with FCC regulations limiting both maximum RF output power and human exposure to RF radiation, the maximum antenna gain including cable loss in a mobile-only exposure condition must not exceed: https://www.inventeksys.com/2-4ghz-antenna-sma/
- A label must be affixed to the outside of the host product with the following statement:

  This device contains FCC ID: 2ATSM-TAIR2

The final host / module combinations may also need to be evaluated against the FCC Part 15B criteria for unintentional radiators in order to be properly authorized for operation as a Part 15 digital device.

PRELIMINARY

All information presented in this document is confidential and for internal use only.
Copyright © 2019, CoreTigo Ltd.

The requirement for KDB 996369 D03:

List of applicable FCC rules
FCC CFR Title 47 Part 15 Subpart C Section 15.247

Summarize the specific operational use conditions

This module has been granted **Limited Modular Approval** for mobile applications. OEM integrators for host products may use the module in their final products without additional FCC certifications if they meet the following conditions. Otherwise, additional FCC approvals must be obtained.

- The host product with the module installed must be evaluated for simultaneous transmission requirements.
- The user's manual for the host product must clearly indicate the operating requirements and conditions that must be observed to ensure compliance with current FCC RF exposure guidelines.
- To comply with FCC regulations limiting both maximum RF output power and human exposure to RF radiation, the maximum antenna gain including cable loss in a mobile-only exposure condition must not exceed: https://www.inventeksys.com/2-4ghz-antenna-sma/
- A label must be affixed to the outside of the host product with the following statement:

  This device contains FCC ID: **2ATSM-TAIR2**

The final host / module combinations may also need to be evaluated against the FCC Part 15B criteria for unintentional radiators in order to be properly authorized for operation as a Part 15 digital device.

Information on test modes and additional testing requirements
Date transfer module demo board can control the EUT work in RF test mode at specified test channel.

Additional testing, Part 15 Subpart B disclaimer
The module without unintentional-radiator digital circuit, so the module does not required an evaluation by FCC Part 15 Subpart B. The host should be evaluated by the FCC Subpart B.

Limited module procedures
The module has not its own antenna, the host meets the necessary requirements to satisfy the module limiting conditions.

Trace antenna designs
Not applicable.

RF exposure considerations
The host device manufacturer should confirm that a separation distance of 20 cm or more should be maintained between the antenna of this host device and persons during the host device operation.

Antennas
The device itself has no antenna, customer can use the PCB antenna, Ceramic antenna or FPC antenna with antenna gain less than 2.15dBi.

Label and compliance information
If this certified module is installed inside the host device, then the outside of the host must be labeled with " Contains FCC ID: 2ATSM-TAIR2".

All information presented in this document is confidential and for internal use only.
Copyright © 2019, CoreTigo Ltd.