ZHIKE

Instruction of Robot Vacuum Cleaner

（Please read the instruction carefully before use and keep it well）

Model：ZK901

Content

- Machine and accessories
- Product introduction
- Product installation
- Instruction
- Product maintenance
- Product parameters
- The name and content of hazardous substances in the product
- Voice prompts and trouble-shooting
- FAQ
- Safety information

Machine and accessories

The following product and accessories will be found after opening the package, please check carefully.

（The following pictures are for your reference, and they are subject to the actual product received。）

Machine	x1
Charging stand	x1
High efficiency filter	x1
Side brush	x2
Power adapter	x1
Instruction	x1
*Cleaning brush	x1
*Dust box	x1
• Water tank	x1
• Mop component	x1
• Single suction port component	x1

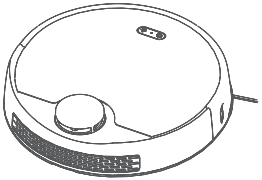

Machine

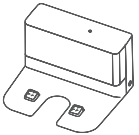

Charging stand

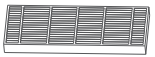

High efficiency filter

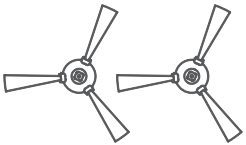

Side brush

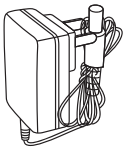

Power adapter

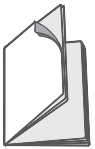

Instruction

*The accessories are already installed on the machine.

• The accessories are optional for the customer.

Product introduction

Keys on the machine

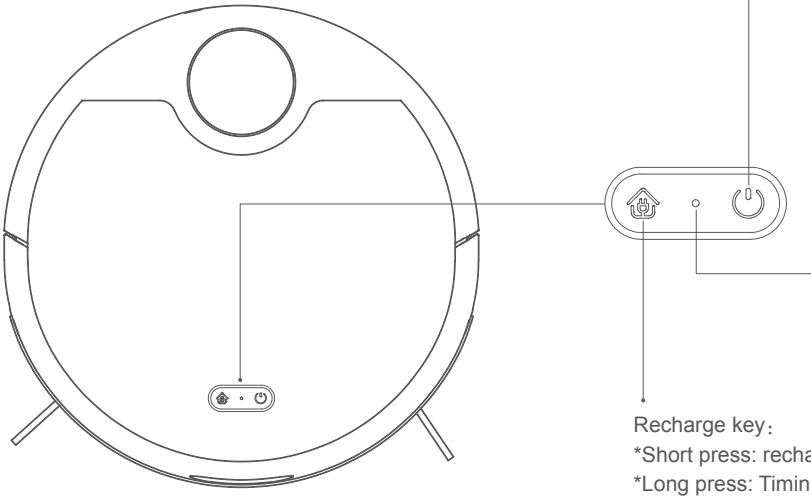

Power key：
*Short press: Sweep/pause
*Long press: On/off the machine

Color of power indication light:
*White: Power ≥20%
*Red: Power ≤20%
*Breathing light flashing: Charging
*Red quick flashing: Faulty

WiFi indication light：
*Slow flash: Waiting for connection
*Normally on: WiFi is connected
*Quick flash: WiFi connection failed

Recharge key：
*Short press: recharge / pause
*Long press: Timing cleaning

Product introduction

Front of machine

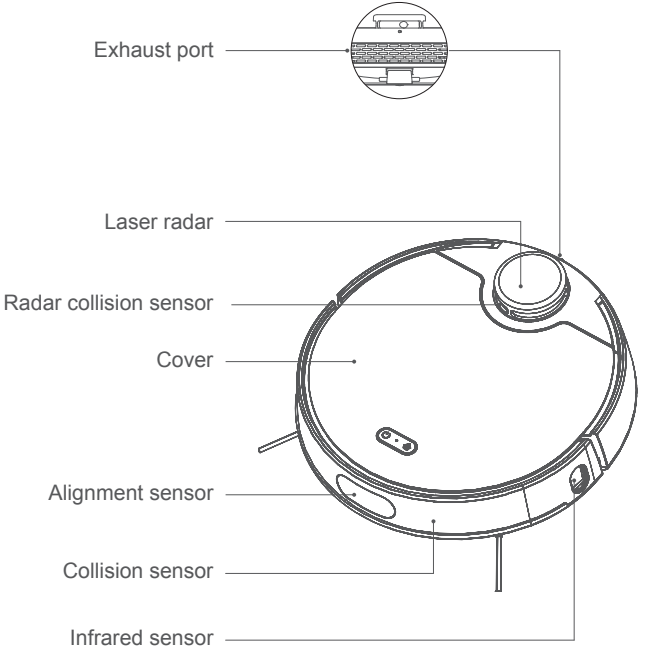

Rear of machine

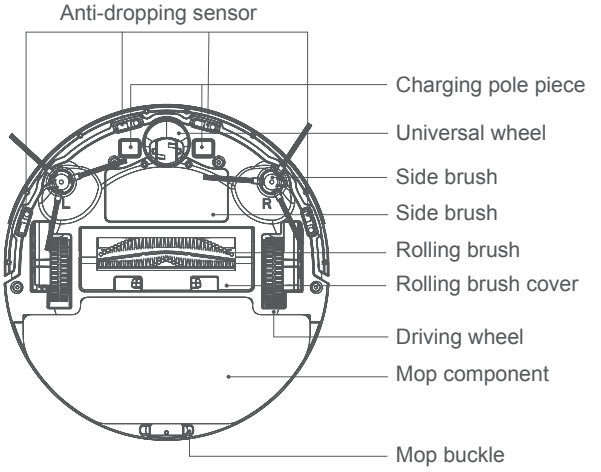

Product introduction

Machine

Dust box

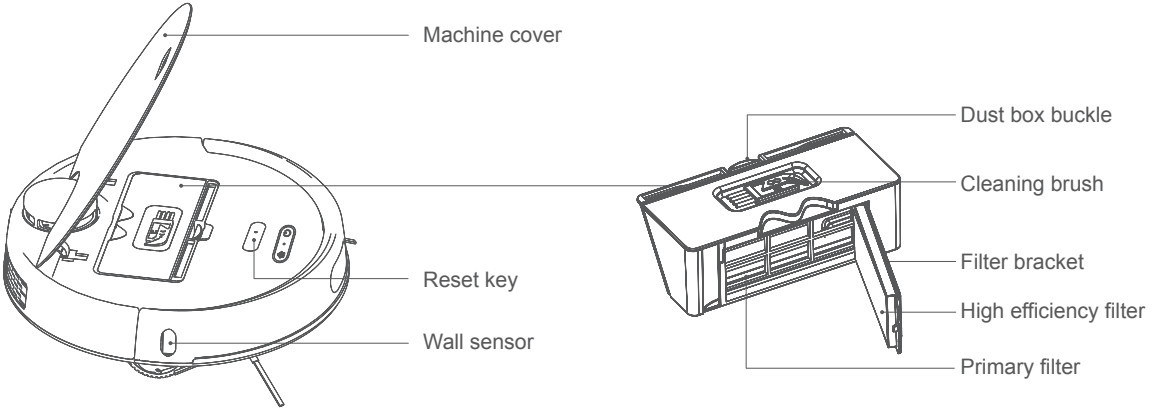

Product introduction

Water tank

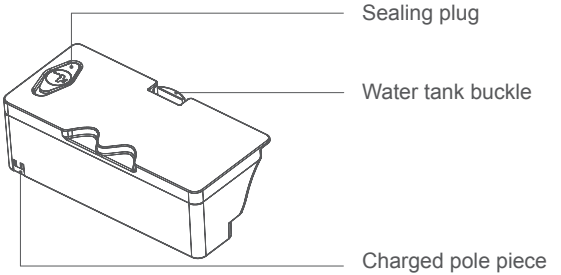

Mop

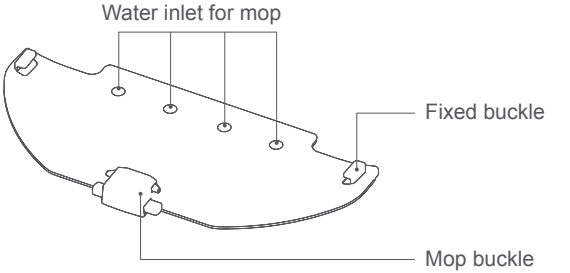

Suction port component

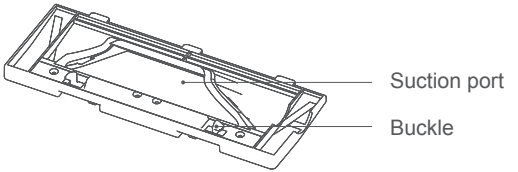

*The components on this page are optional and that can be configured based on different demand of customers.

Product installation

01. Charging stand

Take the charging stand out from the package.

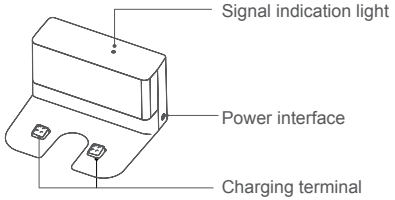

02. Place the charging stand against the wall and connect the power supply

*Please remove the plastic film on the silicone pad at the bottom of the charging stand and place it against the wall and stick it firmly.
*Please make sure that no obstacles in the space of 1 m on both sides and 2m ahead of the charging stand.

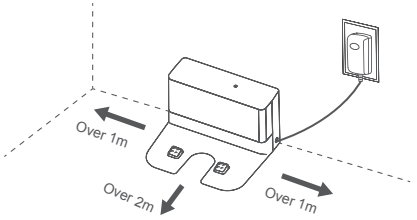

03.Charge the robot vacuum cleaner on the charging stand

*During the charging of the robot vacuum cleaner on the charging stand, it will automatically turn on.

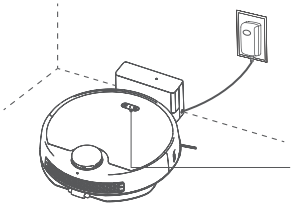

Color of power indication light
*White: Power ≥20%
*Red: Power ≤20%
*Breathing light flashing: Charging
*Red quick flashing: Faulty

04.Install the mobile client to bind the robot vacuum cleaner

*Please scan the QR code below to download and install the mobile client. For details, please refer to the APP Operation Guide.

05.Start cleaning

*Short press the power key or use the APP to start the cleaning task.
*The cleaning cannot be started if the battery is too low. It is recommended to fully charge before initial using. (If the white indicator light for power is normally on, it indicates that charging is complete.)

Instruction

On/Off

1. In case the main machine is being charged on the charging stand, it will automatically turn on.
2.During its charging, the machine cannot be turned off.
3.Long press the power key, the power indication light will light up and the machine turns on. Meanwhile, there will be a voice prompt after completion of turning on.
4. In case the main machine is static, long press the power key to turn it off.

Machine charging

Placement of the charging stand

Place the charging stand on a horizontal floor against the wall and ensure enough space on both sides and the front side of the charging stand. Connect the power adapter to the charging stand and plug the power adapter into the power outlet.

*To ensure that the robot vacuum cleaner can be networked, place the charging stand within the range covered by WiFi.

1. After cleaning, the machine will automatically return to the charging stand for charging. If it cannot return to the charging stand, try to remove the obstacles around the charging stand or take the cleaner back to the charging stand for charging.
2.During the cleaning, if the battery of the machine is lower than 20%, it will automatically return to the charging stand for charging. After the battery is fully charged, it will automatically return to the breakpoint to continue cleaning.
3. If the machine is turned off automatically due to low power, you can manually take it back to the charging stand for charging. Make sure the charging electrode is in good contact and check whether the charging indication light is on.
4.After the machine is fully charged, please turn it off if it doesn’ t work. If the charging is kept for a long time, which may damage the battery.

Connection network for the machine

Before connecting the network, please make sure that the mobile phone and the machine are within the WiFi coverage and as close as possible to the router.
In case the router configuration or the password is changed, or the mobile phone cannot be connected to the device due to other reasons, reset the WiFi of the machine for pairing.

Reset method:

After turning on the machine, press both the power key and the recharge key simultaneously for 3 seconds until you hear the voice prompt and the WiFi indication light slowly flashes, which indicate that the WiFi reset is successful.
Device pairing:
Open the APP to add device and operate by following APP prompts.
* Robot vacuum cleaner does not support 5G WiFi;
*And it does not support WiFi with WEP encryption.

Instruction

Precautions before use

*Please clean up small objects, fragile articles, cables, curtain ropes, etc. scattered on the ground before use to prevent entanglement or damage of the property.

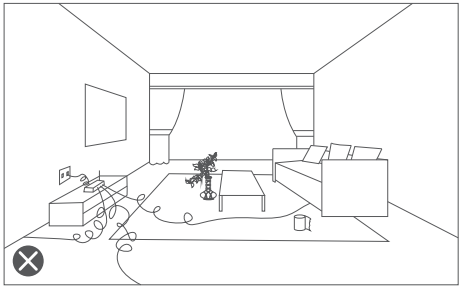

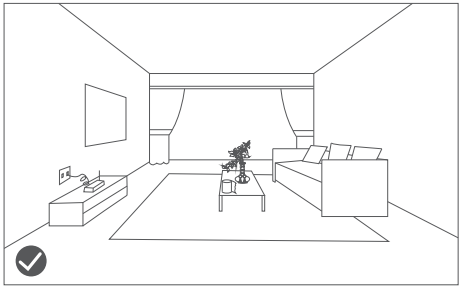

* The users with a duplex structure such as stairs etc. in their homes shall specially note that it is strictly forbidden to use the product in the fenceless suspending environment, which is higher than that of the family activities.

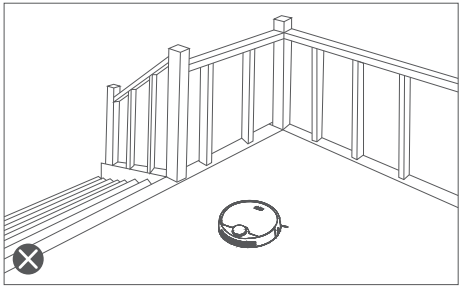

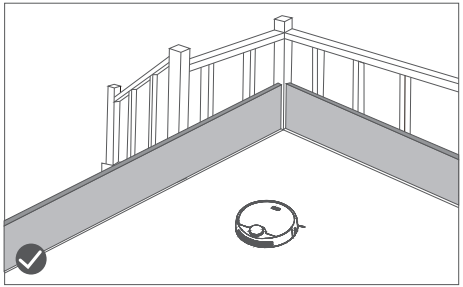

Product maintenance

Cleaning of the dust box and filter

1. Open the machine cover upwards and remove the dust box.

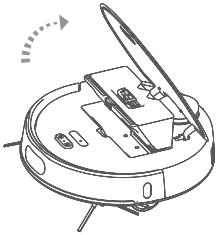

2.Open the dust box cover and remove the garbage inside.

3.Open the filter bracket on the dust box to remove the high efficiency filter.

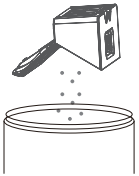

4. Clean the dust box and filter with a cleaning brush. The dust box and primary filter can be cleaned with water。

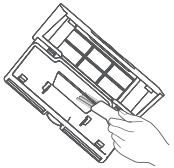

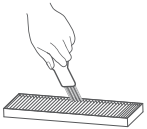

5.Please thoroughly dry the dust box and filter after washing with water. Install the dust box in the machine after installation of the filter.

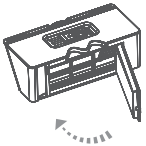

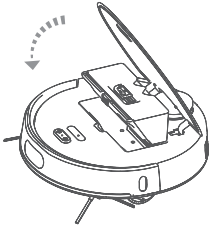

* To ensure the cleaning effect, please clean the filter regularly and replace it every 6-12 months.