DNAKE

INDOOR MONITOR

MODEL:

E211

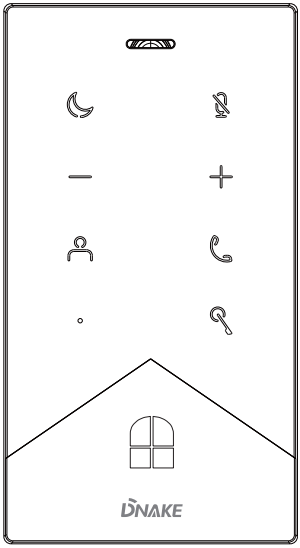

QUICK START GUIDE

REMARK

Please follow the user manual for correct installation and testing. If there is any doubt please call our tech-supporting and customer center.

Our company applies ourselves to reformation and innovation of our products. No extra notice for any change. The illustration shown here is only for reference. If there is any difference, please take the actual product as the standard.

The product and batteries must be handled separately from household waste. When the product reaches the end of service life and needs to be discarded, please contact the local administrative department and put it in the designated collection points in order to avoid the damage to the environment and human health caused by any disposal. We encourage recycling and reusing the material resources.

CATALOG

Pictures 1

Package Contents.....2

System Configuration 3

System Diagram.....4

Installation.....7

Safety Instructions 11

FCC Warning.....12

For specific operation instructions, please scan the following QR code to obtain the full version of the User Manual.

PICTURES

MODEL: E211H/E211A

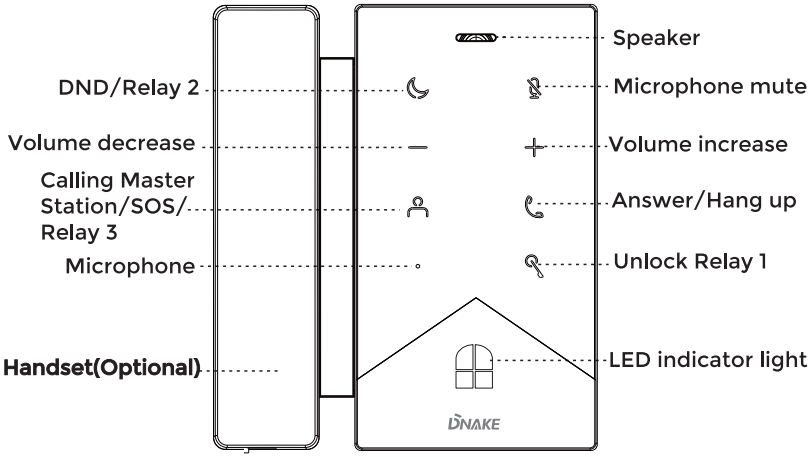

MODEL: E211/E211W

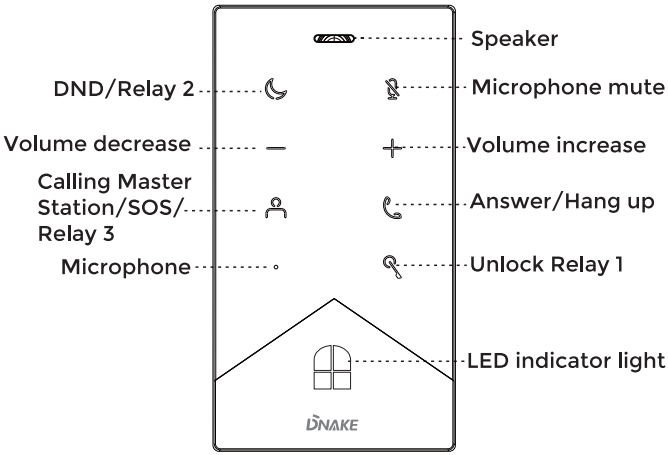

PACKAGE CONTENTS

Please make sure the package contains the following items

MODEL: E211/E211W

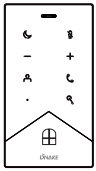
Indoor Monitor

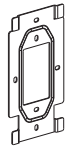
Bracket

Screw

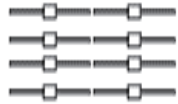
Diode

Wires

Quick Start Guide

MODEL: E211H/E211A

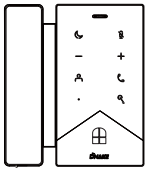
Indoor Monitor

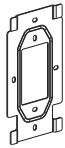
Rear Cover

Screw

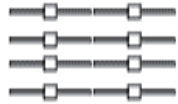
Diode

Wires

Handset

Quick Start Guide

SYSTEM CONFIGURATION

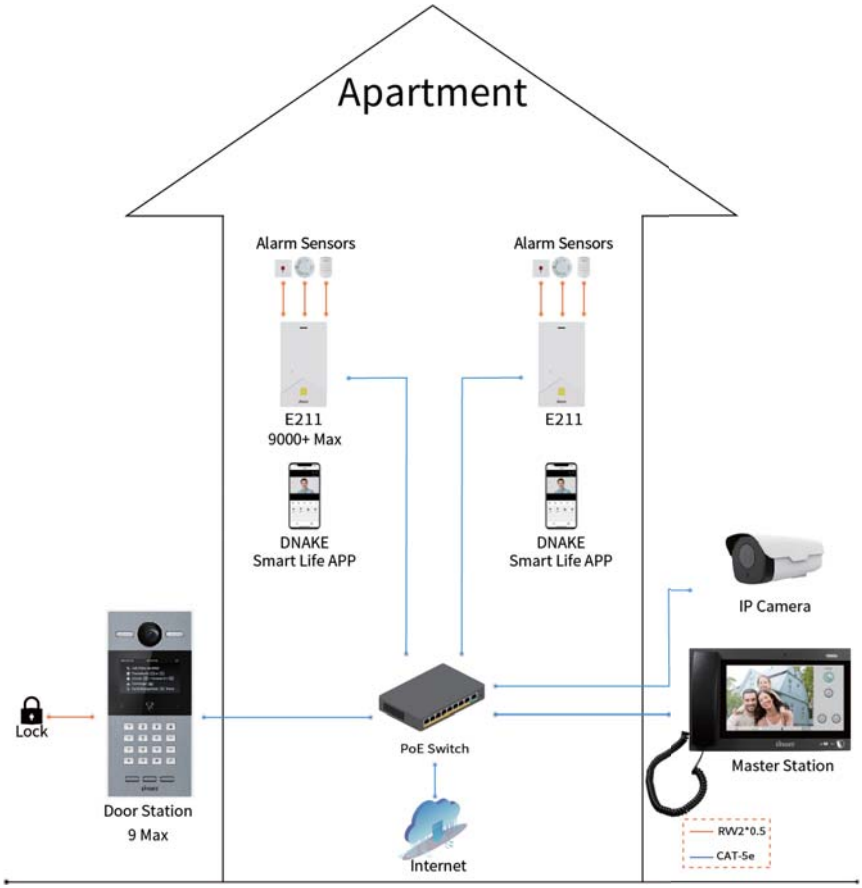

SYSTEM DIAGRAM

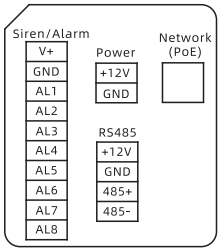

Indoor Monitor

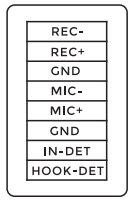

Handset(Optional)

1. Power

The power interface of Indoor Monitor connects to 12V DC power.

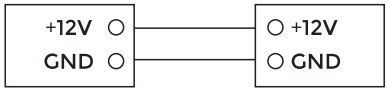

Power Interface DC 12V

2. Network(PoE)

Standard RJ45 interface is for the connection with PoE switch or other network switch.

PSE shall comply with IEEE 802.3af (PoE) and its output power not less than 15.4W and its output voltage not be less than 50V.

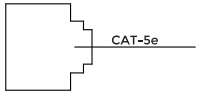

Network

3. RS485 Interface

Enable to connect equipment with RS485 interface. RS485 interface can output 12V/100mA power supply. If RS485 equipment to be connected doesn't require the power supply, there is no need to connect to +12V.

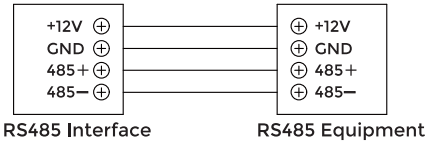

4. Siren/Alarm interface

Interface of alarm zones connects with normally-open or normally-closed switch.

When the alarm zone is triggered, it will output 12V/100mA power.

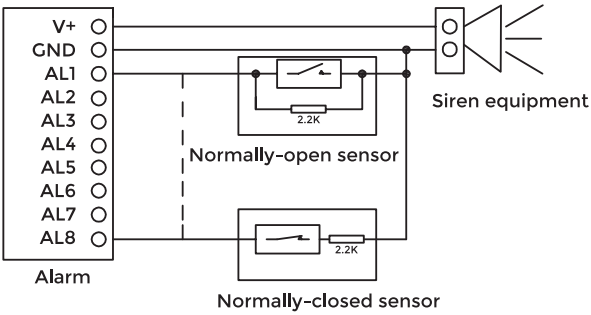

5. Handset Interface

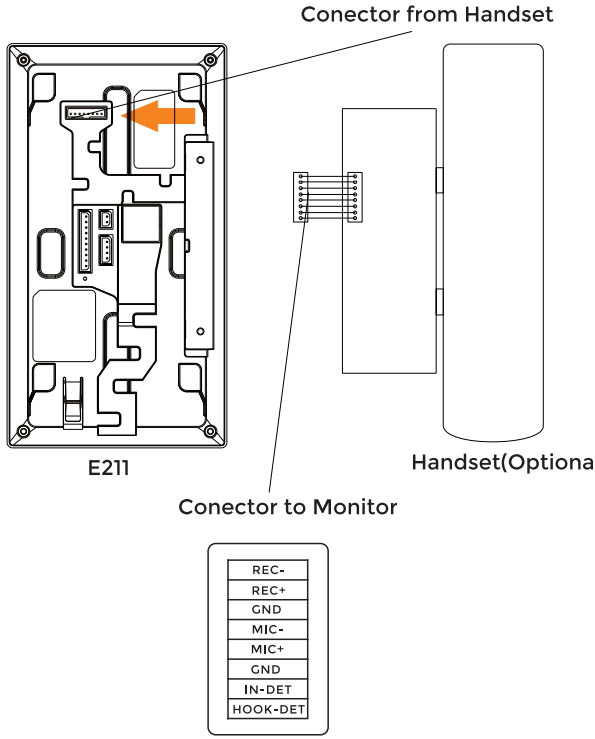

INSTALLATION

MODEL: E211/W211W(Surface Mounting-86 Mounting Box)

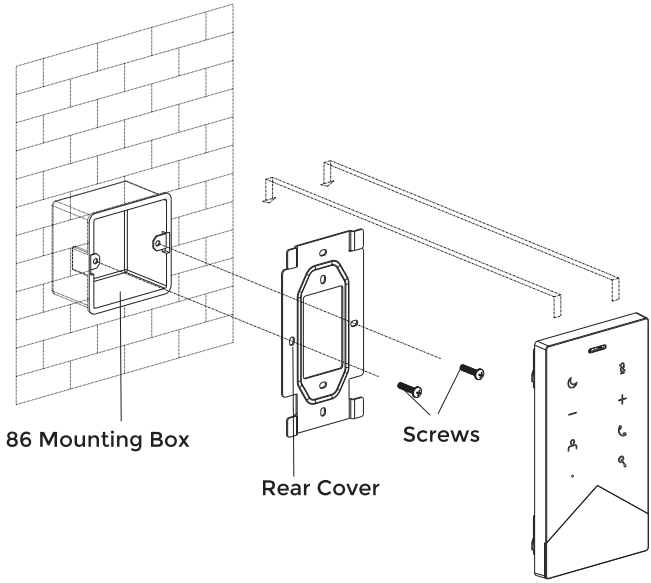

Product dimension: 100x184x25mm
Surface mounting product dimension: 100x184x28mm

Installation Instructions:

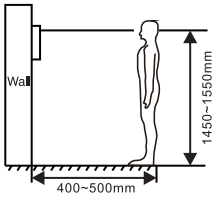

[Suggestion]: The camera should be 1450～1550mm above the ground. The camera at this height can capture human face perfectly.

MODEL: E211/W211W(Surface Mounting-118 Mounting Box)

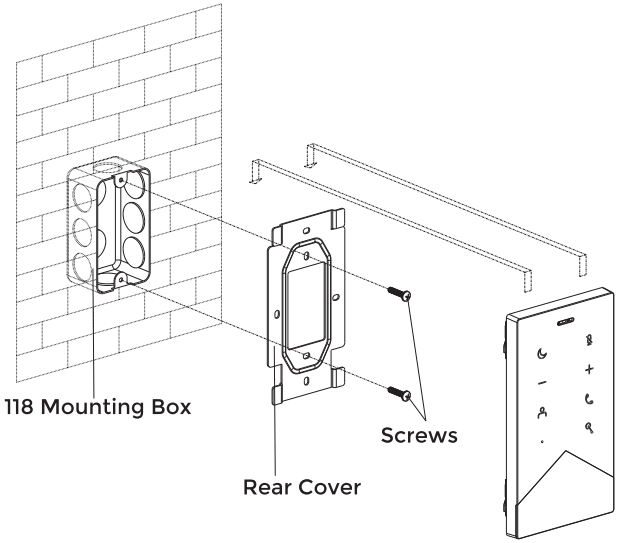

Product dimension: 100x184x25mm
Surface mounting product dimension: 100x184x28mm

Installation Instructions:

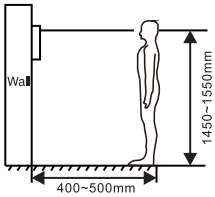

[Suggestion]: The camera should be 1450～1550mm above the ground. The camera at this height can capture human face perfectly.

MODEL: E211H/W211A(Surface Mounting-86 Mounting Box)

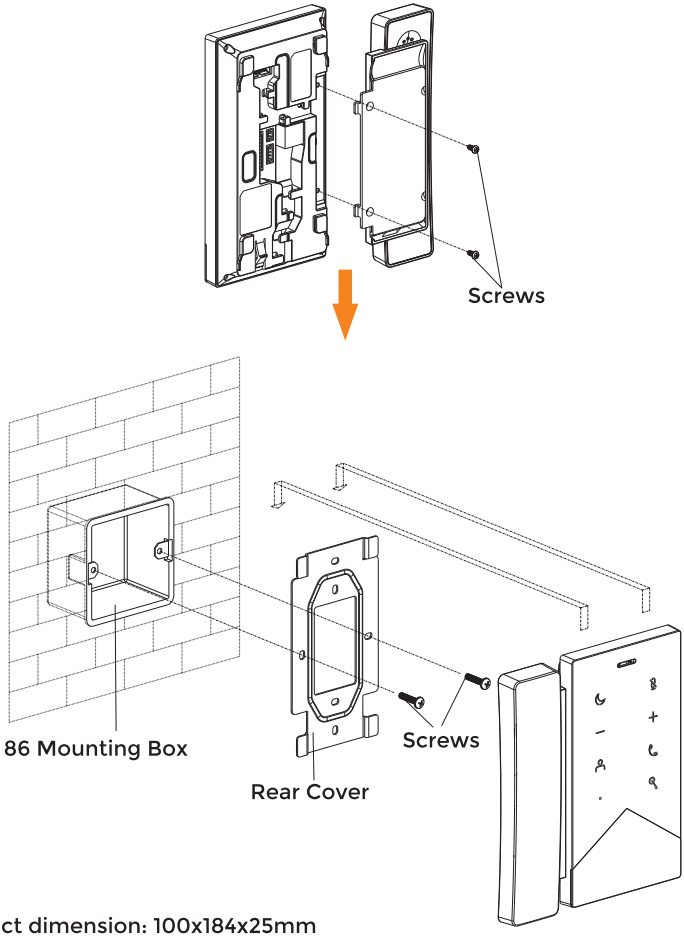

Product dimension: 100x184x25mm
Surface mounting product dimension: 100x184x28mm

Installation Instructions:

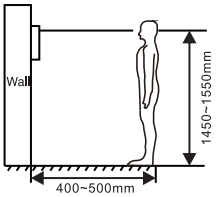

[Suggestion]: The camera should be 1450～1550mm above the ground. The camera at this height can capture human face perfectly.

MODEL: E211H/W211A(Surface Mounting-118 Mounting Box)

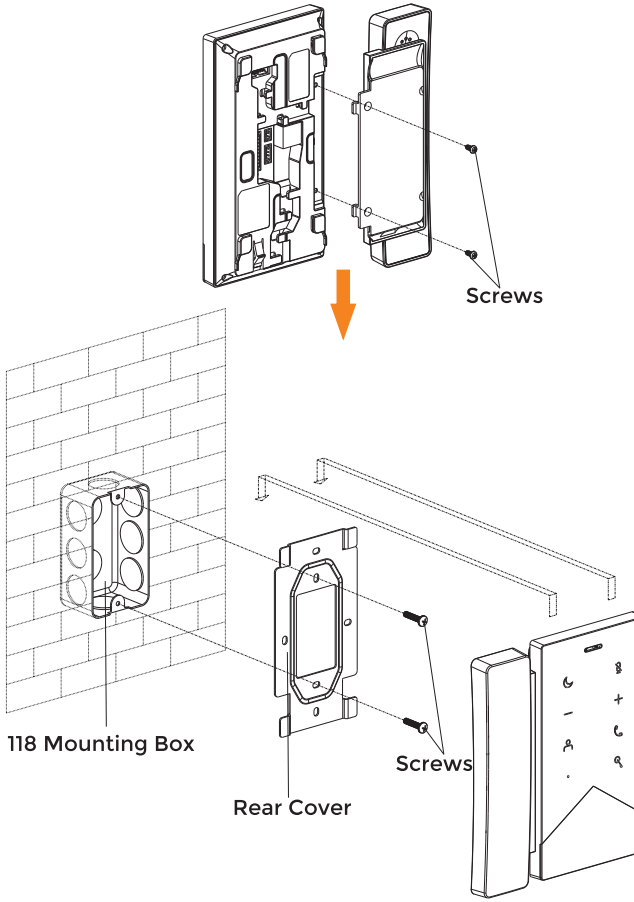

Product dimension: 100x184x25mm
Surface mounting product dimension: 100x184x28mm

Installation Instructions:

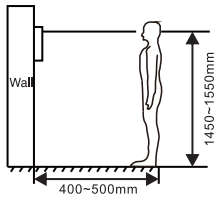

[Suggestion]: The camera should be 1450～1550mm above the ground. The camera at this height can capture human face perfectly.

SAFETY INSTRUCTIONS

In order to protect you and others from harm or your device from damage, please read the following information before using the device.

Do not install the device in the following places:

■ Do not install the device in high-temperature and moist environment or the area close to magnetic field, such as the electric generator, transformer or magnet.

■ Do not place the device near the heating products such as electric heater or the fluid container.

■ Do not place the device in the sun or near the heat source, which might cause discoloration or deformation of the device.

■ Do not install the device in an unstable position to avoid the property losses or personal injury caused by the falling of device.

Guard against electric shock, fire and explosion:

■ Do not use damaged power cord, plug or loose outlet.

■ Do not touch the power cord with wet hand or unplug the power cord by pulling.

■ Do not bend or damage the power cord.

■ Do not touch the device with wet hand.

■ Do not make the power supply slip or cause the impact.

■ Do not use the power supply without the manufacturer's approval.

■ Do not have the liquids such as water go into the device.

Clean Device Surface

■ Clean the device surfaces with soft cloth dipped in some water, and then rub the surface with dry cloth.

Other Tips

■ In order to prevent damage to the paint layer or the case, please do not expose the device to chemical products, such as the diluent, gasoline, alcohol, insect-resist agents, opacifying agent and insecticide.

■ Do not knock on the device with hard objects.

■ Do not press the screen surface. Overexertion might cause flopover or damage to the device.

■ Please be careful when standing up from the area under the device.

■ Do not disassemble, repair or modify the device at your own discretion.

■ The arbitrary modification is not covered under warranty. When any repair required, please contact the customer service center.

■ If there is abnormal sound, smell or fume in the device, please unplug the power cord immediately and contact the customer service center.

■ When the device isn't used for a long time, the adaptor and memory card can be removed and placed in dry environment.

■When moving, please hand over the manual to new tenant for proper usage of the device.

FCC WARNING

This device complies with Part 15 of the FCC Rules. Operation is subject to the following two conditions:

(1) This device may not cause harmful interference, and (2) this device must accept any interference received, including interference that may cause undesired operation.

NOTE 1: This equipment has been tested and found to comply with the limits for a Class B digital device, pursuant to part 15 of the FCC Rules. These limits are designed to provide reasonable protection against harmful interference in a residential installation. This equipment generates uses and can radiate radio frequency energy and, if not installed and used in accordance with the instructions, may cause harmful interference to radio communications. However, there is no guarantee that interference will not occur in a particular installation. If this equipment does cause harmful interference to radio or television reception, which can be determined by turning the equipment off and on, the user is encouraged to try to correct the interference by one or more of the following measures:

- Reorient or relocate the receiving antenna.

- Increase the separation between the equipment and receiver.

-Connect the equipment into an outlet on a circuit different from that to which the receiver is connected.

-Consult the dealer or an experienced radio/TV technician for help.

NOTE 2: Any changes or modifications to this unit not expressly approved by the party responsible for compliance could void the user's authority to operate the equipment.

RF exposure statement

This equipment complies with the FCC radiation exposure limits set forth for an uncontrolled environment. This transmitter must not be co-located or operating in conjunction with any other antenna or transmitter.

This equipment complies with FCC radiation exposure limits set forth for an uncontrolled environment. This equipment should be installed and operated with minimum distance 20cm between the radiator & your body.

V1.2
600110154102

EASY & SMART INTERCOM SOLUTIONS

DNAKE