DNAKE

DOOR STATION

MODEL:

S212

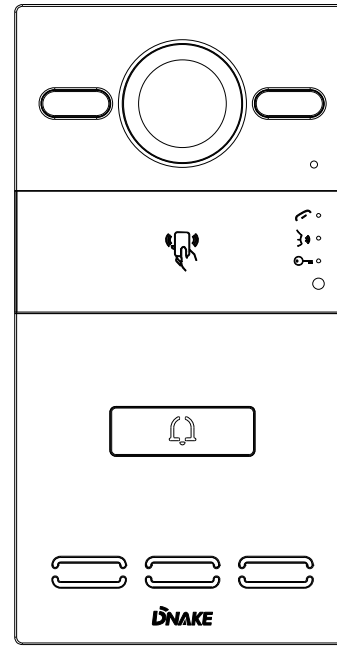

USER MANUAL

REMARK

Please follow the user manual for correct installation and testing. If there is any doubt please call our tech-supporting and customer center.

Our company applies ourselves to reformation and innovation of our products. No extra notice for any change. The illustration shown here is only for reference. If there is any difference, please take the actual product as the standard.

The product and batteries must be handled separately from household waste. When the product reaches the end of service life and needs to be discarded, please contact the local administrative department and put it in the designated collection points in order to avoid the damage to the environment and human health caused by any disposal. We encourage recycling and reusing the material resources.

CATALOG

Technical Parameters 1
Package Contents 1
Basic Function 2
Pictures.....3
Basic Operations 4
Web Settings 5
System Configuration.....12
System Diagram 13
Installation 15
Troubleshooting 20
Safety Instructions 21

TECHNICAL PARAMETERS

1. Working voltage: DC12V
   PoE
2. Rated power: 3W
3. Standby power: 1.5W
4. Working temperature: -40℃～+55℃
5. Storage temperature: −40℃～+70℃
6. Working Humidity: 10% to 90% (non-condensing)
7. Camera: 1920*1080 CMOS

PACKAGE CONTENTS

Please make sure the package contains the following items：

MODEL: S212(Surface Mounting)

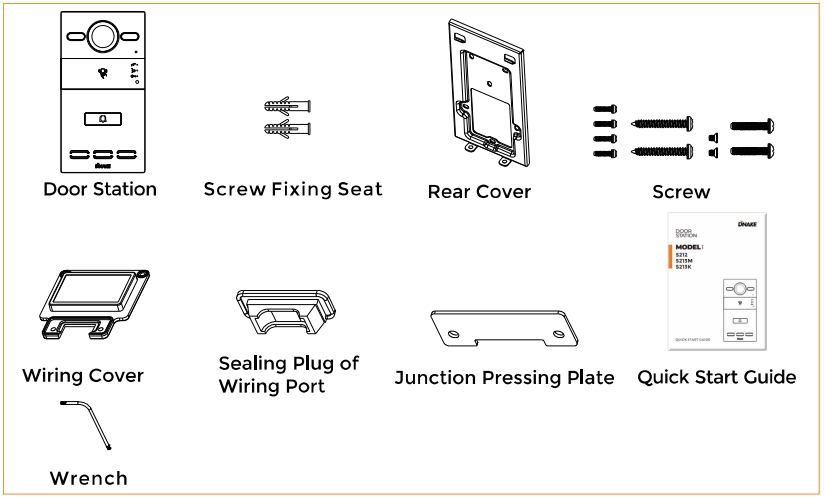

MODEL: S212(Flush Mounting)

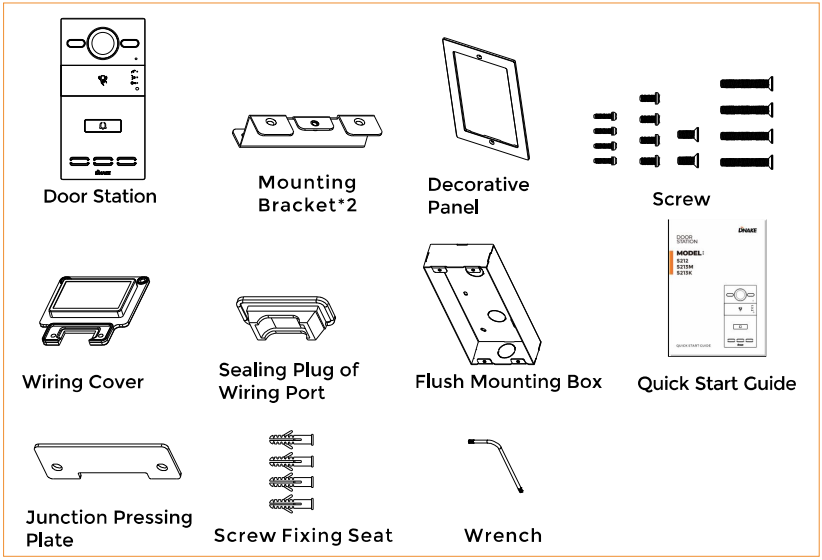

BASIC FUNCTION

1. 110° wide-angle 2MP HD camera with automatic lighting;
2. Easy integration with other SIP devices by SIP 2.0 protocol;
3. Door entry methods: Call, IC card (13.56MHz), ID card(125kHz), NFC, APP;
4. Standard PoE (IEEE802.3af) / 12V DC;
5. Tamper alarm;
6. 110° wide-angle 2MP HD camera with automatic lighting.

PICTURES

MODEL: S212

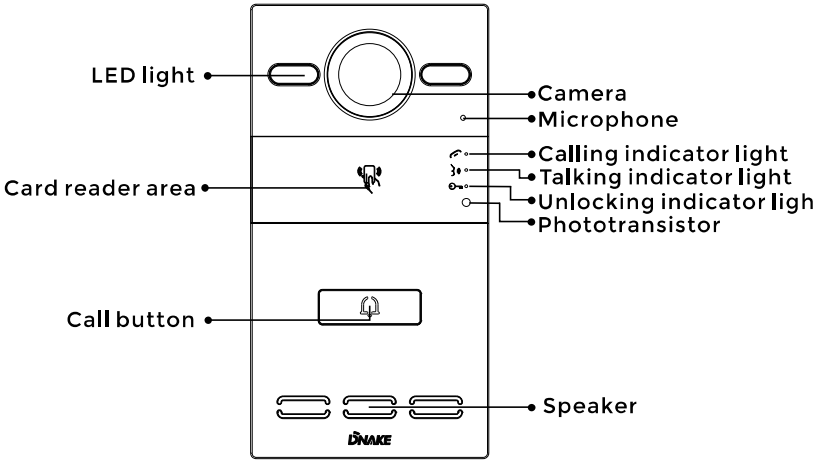

Note:

Calling indicator light: The 1st indicator light will be turned on if the calling button is pressed.

Talking indicator light: The 2nd indicator light will be turned on if the call is picked up or Door Station is monitored.

Unlocking indicator light: The 3rd indicator light will be turned on for 3s when the door is opened.

Relay Outputs: S212 support 2 relay outputs.

BASIC OPERATION

1. Call indoor monitor

In standby mode, press the call button on door station to call indoor monitor. During the call, press the call button on door station again to end the call. If the call fails or indoor monitor is busy, door station will emit a beep.

2. Unlocking by card

Put the registered IC/ID card on card reader area of the door station. If IC/ID card has been authorized, after unlocking the door by card, the system will issue a ringtone and indicator light is on for 3 seconds, otherwise it will emit a beep.

WEB SETTINGS

Connect door station and PC to the network switch on the same LAN. Input IP address of door station in the web browser of PC, then input the user name and password(the default name is admin, the password is 123456) to enter into the following interface:

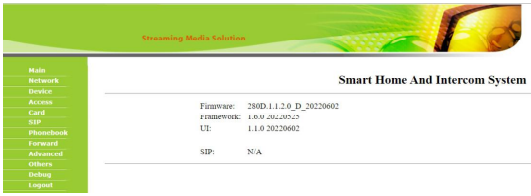

Main page is used for showing firmware version and the status of SIP registration.

1. Network Settings:

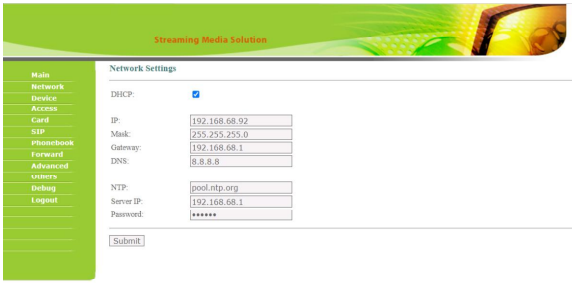

Network page is used for setting up network of device here.

DHCP: obtain IP address via DHCP;

IP: static IP address.

Mask: subnet mask.

Gateway: it depends on IP address.

DNS: Domain Name Server;

NTP: fill in Network Terminal Protocol to synchronize the time;

Server IP & Password: server is the IP of CMS and password is the admin's password of device.

2. Device Settings:

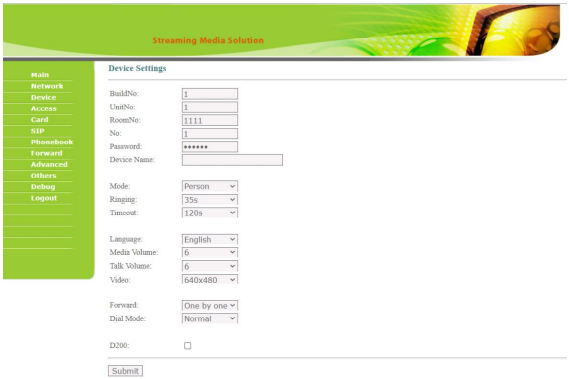

Device is used for setting up connection with other devices.

BuildNo: number of the building;

UnitNo: number of the unit;

RoomNo: number of the room;

No: number of the device;

Password: admin password;

Device name: the name of Door Station displayed in the Indoor Monitor while calling;

Mode: unit-Door Station used in the building entrance; wall-Door Station used in the community entrance; person-Door Station used in the villa entrance;

Ringing: ring time;

Timeout: maximum call duration;

Language: various types of language;

Media Volume: adjust the volume of speaker;

Talk Volume: adjust the volume of microphone;

Video: resolution of the device;

Forward: the call can be made one by one or simultaneously;

Dial Mode: the call mode can be set to normal or repeated;

D200: used for matching to 200 system.

3. Access Settings:

Access is used for setting up unlock time, elevator, admin card and unlock password.

Unlock Timeout: door opening time length;

Unlock Delay: delay duration of unlock;

Elev refer: used for setting the floor of Door Station ranging from 01 to 99;

Admin Card: add admin card;

Del All Card: delete all registered cards;

Security ON/OFF: alarm switch;

Unlock Passwd: used for unlocking the door. The system default password is 0000. Eight unlocking passwords can be added.

Card Registration:

The Admin Card is used for registering user card. There are two ways to register the admin card:

1. The user enters card No. of the admin card in the box after “Admin Card” and then clicks “Submit” to finish the registration of the admin card.

2. If the user isn’t aware of admin card No., please enter 0 in the box first and click “Submit”. Then place the admin card close to the card reader area. When the system gives an indication tone, it means that the card is registered successfully.

When registering the user card, the user should swipe the admin card first. The system emits a beep. Then place the card to be registered near the card reader area within 10 seconds. If the system gives an indication tone, it means that the user card is registered successfully. When registering the user card, the card to be registered should be swiped 10 seconds after the admin card is swiped. Once a user card is registered, it will postpone for 10 seconds.

When there is no activity for 10 seconds, the system will exit from registration status automatically. To register a new user card, the user should swipe the admin card again.

4. Card:

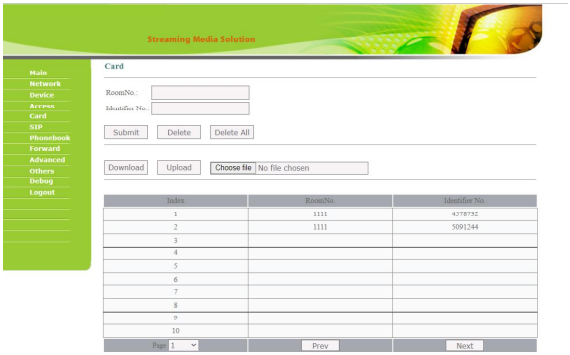

Card is used for adding cards.

RoomNo & Identifier No: register or delete cards;

Download & Upload & Choose file: download all cards info or upload a file to register cards in bulk.

5. SIP:

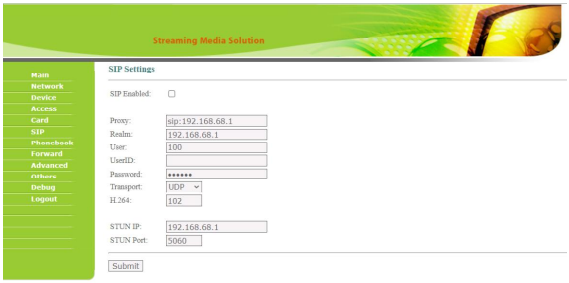

The page is used for setting up SIP.

SIP Enabled: switch to enable or disable SIP;

Proxy: fill server address and port, the format: sip:server address:port;

Realm: fill server address and port, the format: server address:port;

User & UserID & Password: user, account and password of SIP;

Transport: Switch among UDP, TCP and TLS;

H.264: advanced Video Coding;

STUN IP & STUN Port: fill your STUN IP server and port if needed.

6. Phonebook:

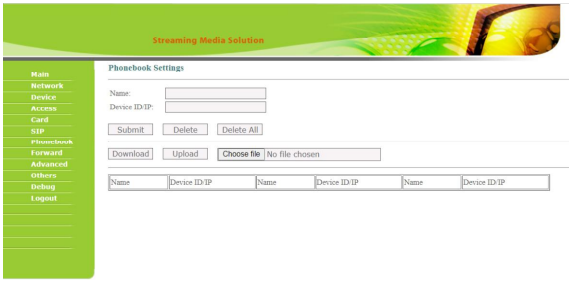

This interface is used to manage Phonebook.

Name: name can be customized;

Device ID/IP: fill in ID number, IP address or SIP account of device;

Delete/Delete All: delete one or all listed devices below.

Download/Upload: export a phonbook file to add devices and upload it to the list below.

7. Forward (Call transfer):

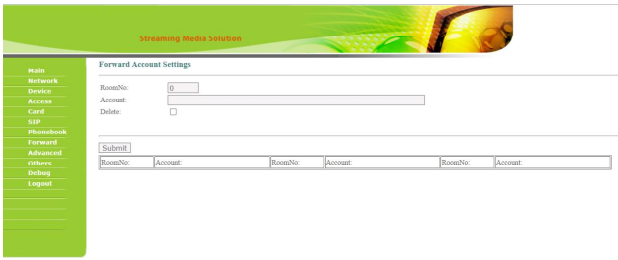

This setting is used for make the call from Door Station to other SIP device, such as IP phones. For example, the SIP account of IP phone is 2008, and the sip server is 192.168.0.96, fill sip:2008@192.168.0.96 in Account. And if you want to press 1 on the Door Station to make the call to this IP device, fill 1 in RoomNo.

RoomNo & Account: the forwarding target;

Delete: delete the corresponding account.

8. Advanced

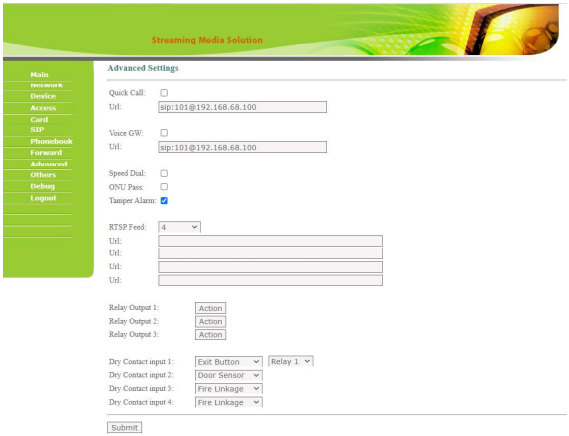

Advanced page is used for setting up accessibility features.

Quick Call & URL: call the corresponding URL by management-center button or icon;

Voice GW & URL: Voice Gateway, used to connect devices support Voice gateway;

Speed Dial: press random number to call out automatically;

ONU Pass: if using optical cable but not network cable in the building, it should be enabled;

Tamper Alarm: the switch for enabling or disabling Tamper Alarm;

RTSP Feed: add IPC to Door Station to allow Indoor Monitor switch among Door Station and IPCs while calling.

Dry Contact input 1-4: the settings for Exit Button, Door Sensor and Fire Linkage;

9. Others

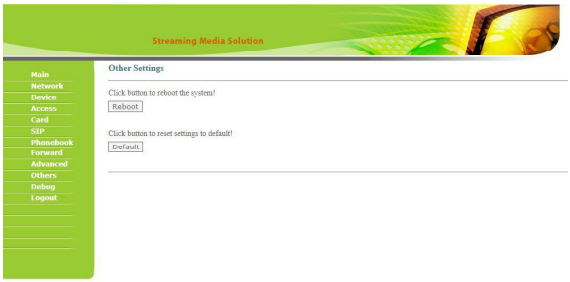

Others page is used for reboot.
Reboot: click to reboot the device.
Default: click to default the device.

10. Debug

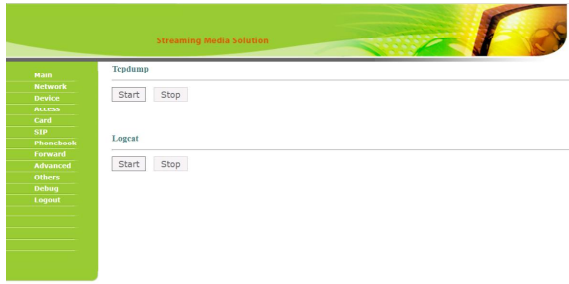

Debug page is used for problem solving.
Tcpdump: click start to use packet analyzer and stop to download file;
Logcat: click start to record the logs of device and stop to download file.

11. Logout

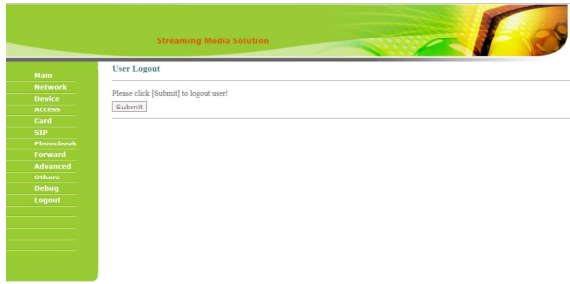

Logout page is used for signing off.
User Logout: click to logout the webpage. After that, you can use other accounts to login.

SYSTEM CONFIGURATION

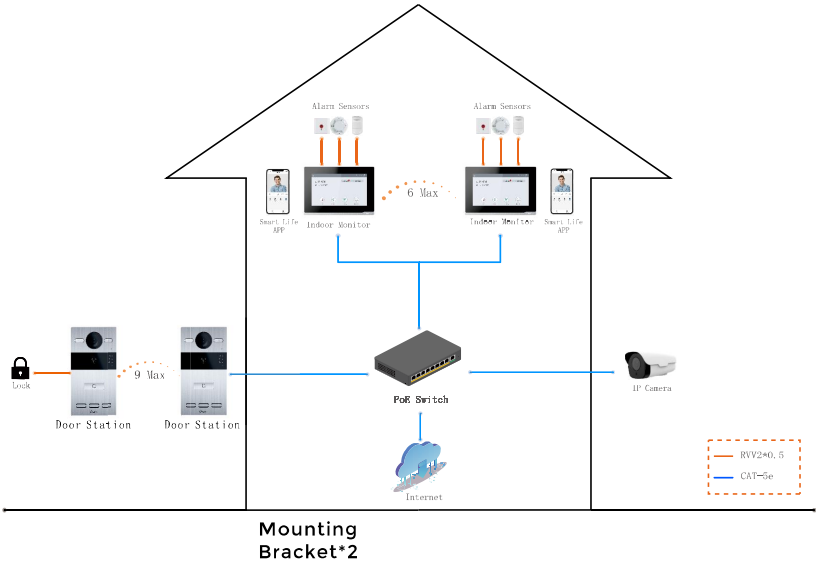

SYSTEM DIAGRAM

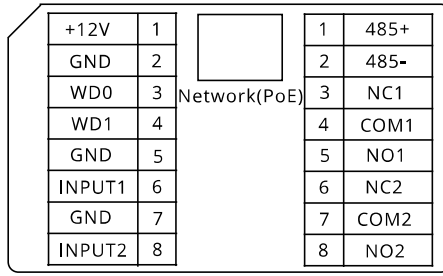

1. Network(PoE)

Standard RJ45 interface connects with master station, indoor monitor or other network equipment by network switch.

PSE of power supply equipment shall comply with IEEE 802.3at (PoE plus), with output power not less than 30W and output voltage not less than 50V.

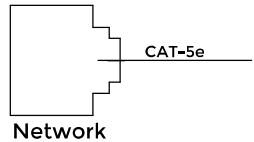

2. Power

Power interface of door station connects with 12V DC power.

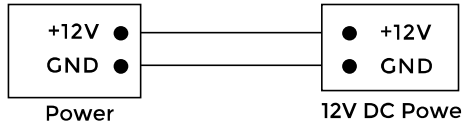

3. Exit/Door-detector/Fire Fighting Linkage

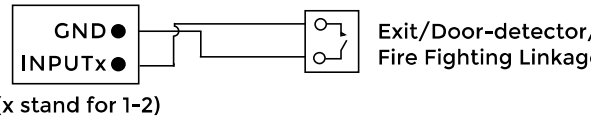

(x stand for 1-2)

4. RS485/Switching Value Output

Enable to connect equipment with RS485 interface.

Connect to the lock module(independent power supply is necessary for the lock).

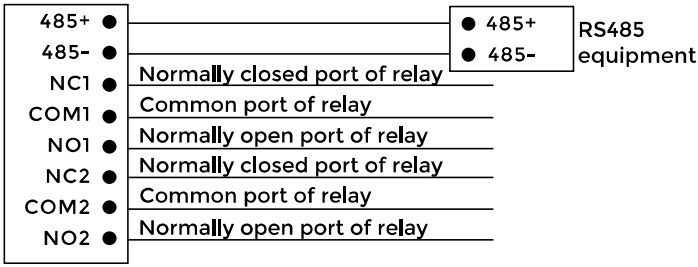

RS485/Switching Value Output

Warning

1.When connecting to an inductive load device such as a relay or electromagnetic lock, you are recommended to use a diode 1A/400V(included in the accessories) in anti-parallel with the load device to absorb inductive load voltage peaks. Intercom will be better protected in this way.

2.The load current of the relay cannot be greater than 2A.

See attached picture for more details.

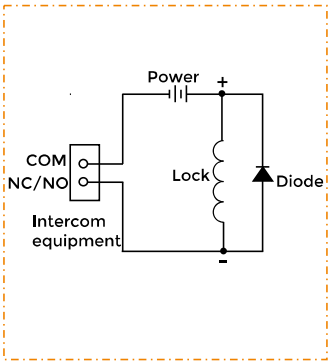

5. Card Reader Interface

The interface can be connected to one IC/ID card reader or be used for reading the information of built-in card reader.

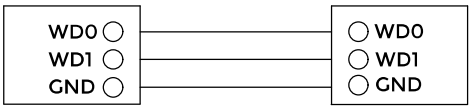

Card Reader Interface IC/ID Card Reader or Management Device

Note: Door station can only be connected to one card reader or management device at a time.

INSTALLATION

MODEL: S212(Installation of Wiring Cover)

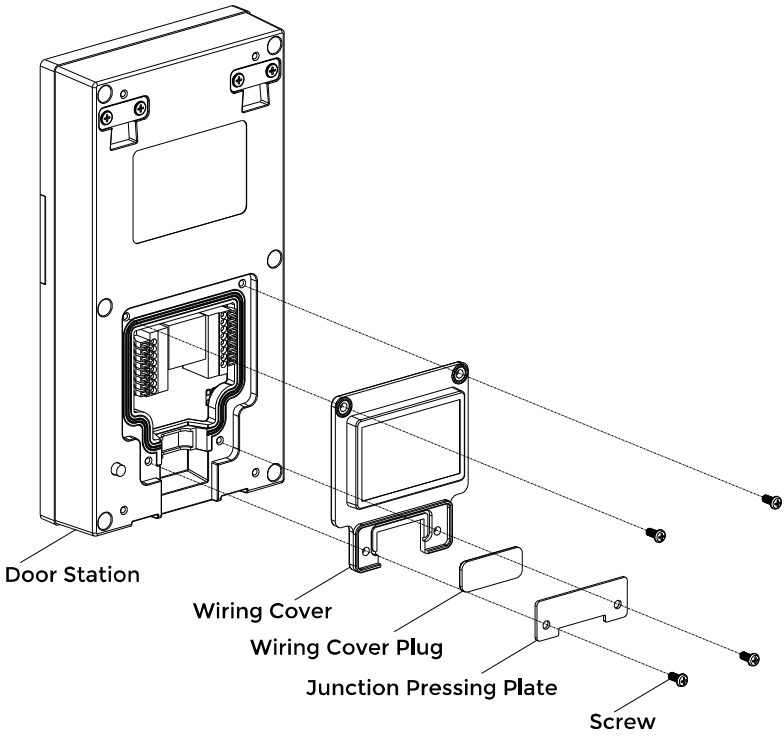

MODEL: S212(Surface Mounting-86 Mounting Box)

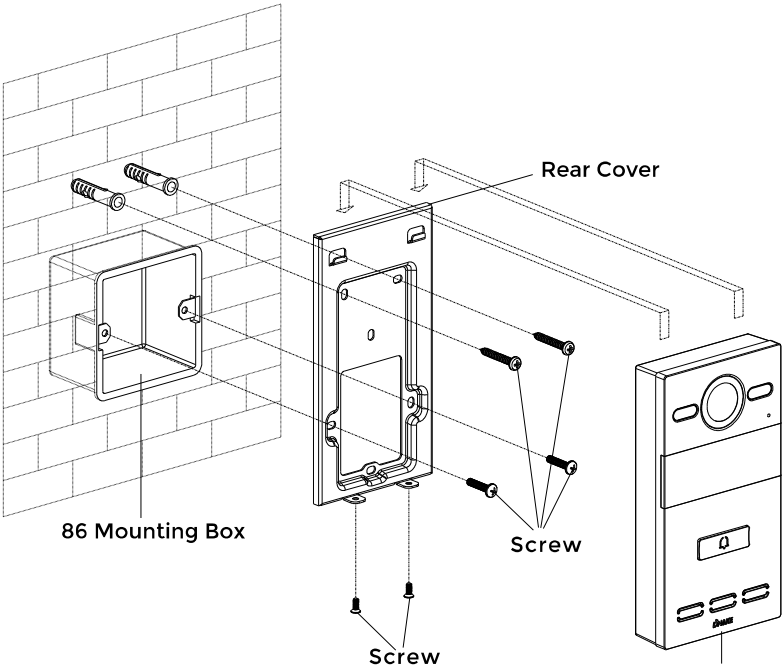

Product dimension: 88x168x32.5mm
Surface mounting product dimension: 88x168x34mm

Installation Instructions:

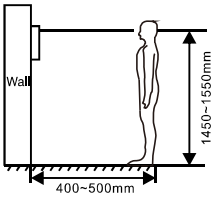

[Suggestion]: The camera should be 1450～1550mm above the ground. The camera at this height can capture human face perfectly.

MODEL: S212(Surface Mounting-118 Mounting Box)

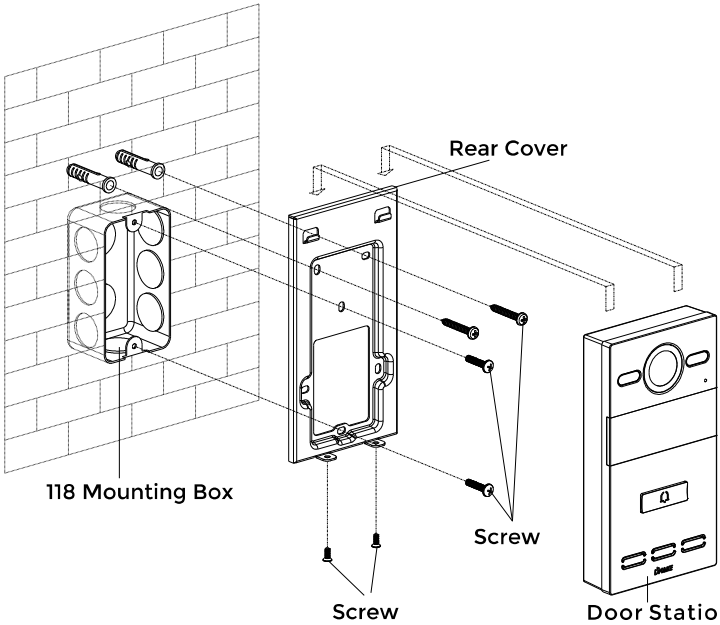

Product dimension: 88x168x32.5mm
Surface mounting product dimension: 88x168x34mm

Installation Instructions:

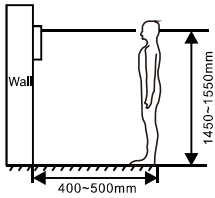

[Suggestion]: The camera should be 1450～1550mm above the ground. The camera at this height can capture human face perfectly.

MODEL: S212(Flush Mounting)

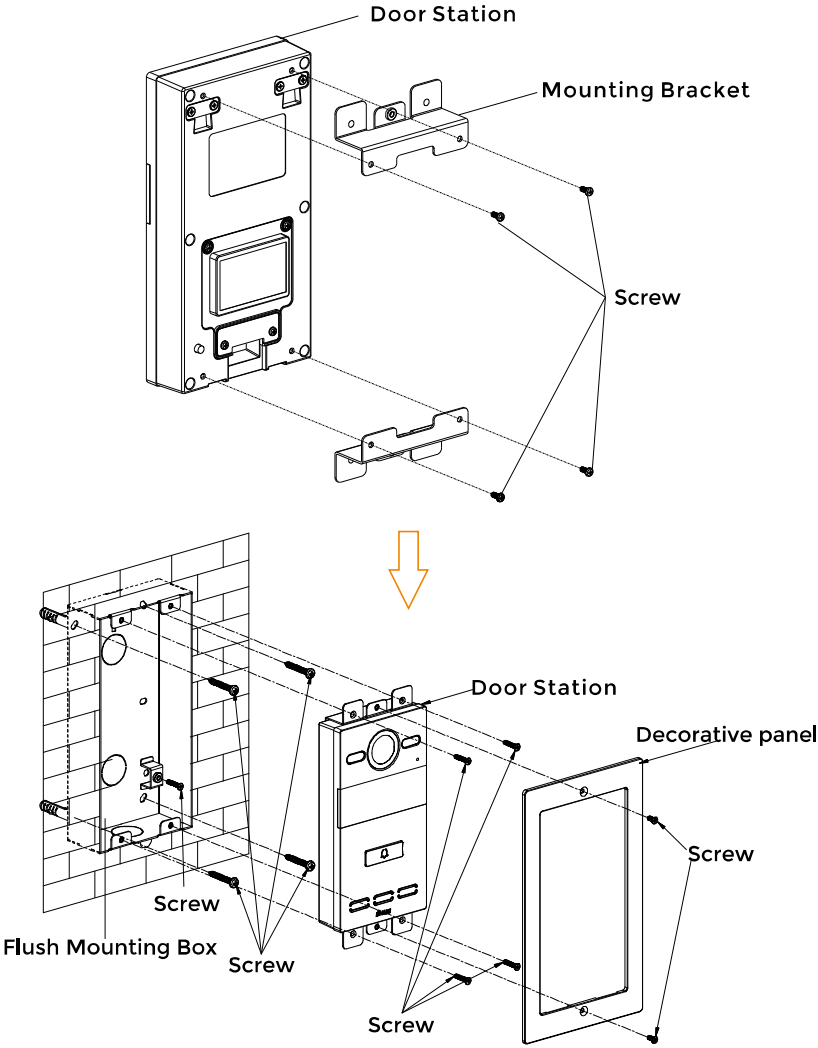

Product dimension: 88x168x32.5mm
Flush mounting product dimension: 120x210x48mm
Hole-cutting dimension: 98x199x42mm

Installation Instructions:

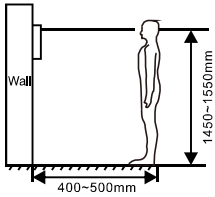

[Suggestion]: The camera should be 1450～1550mm above the ground. The camera at this height can capture human face perfectly.

TROUBLESHOOTING

Some common failures and troubleshooting methods are listed for your reference. In case of failure which cannot be repaired, do not disassemble or repair the product by yourself. Please contact the after-sales service department.

When unit door station or wall door station fails to call indoor monitor:

When setting door station, please make sure building No. and unit No. of door station are the same as the ones of indoor monitor;

Please check whether the network is connected;

Please check if there are any security settings for the network, such as VLAN configuration;

When unit door station, wall door station or indoor monitor fails to call master station:

Please check whether the network is connected;

Please check if there are any security settings for the network, such as VLAN configuration;

SAFETY INSTRUCTIONS

In order to protect you and others from harm or your device from damage, please read the following information before using the device.

Do not install the device in the following places:

■ Do not install the device in high-temperature and moist environment or the area close to magnetic field, such as the electric generator, transformer or magnet.

■ Do not place the device near the heating products such as electric heater or the fluid container.

■ Do not place the device in the sun or near the heat source, which might cause discoloration or deformation of the device.

■ Do not install the device in an unstable position to avoid the property losses or personal injury caused by the falling of device.

Guard against electric shock, fire and explosion:

■ Do not use damaged power cord, plug or loose outlet.

■ Do not touch the power cord with wet hand or unplug the power cord by pulling.

■ Do not bend or damage the power cord.

■ Do not touch the device with wet hand.

■ Do not make the power supply slip or cause the impact.

■ Do not use the power supply without the manufacturer's approval.

■ Do not have the liquids such as water go into the device.

Clean Device Surface

■ Clean the device surfaces with soft cloth dipped in some water, and then rub the surface with dry cloth.

Other Tips

■ In order to prevent damage to the paint layer or the case, please do not expose the device to chemical products, such as the diluent, gasoline, alcohol, insect-resist agents, opacifying agent and insecticide.

■ Do not knock on the device with hard objects.

■ Do not press the screen surface. Overexertion might cause flopover or damage to the device.

■ Please be careful when standing up from the area under the device.

■ Do not disassemble, repair or modify the device at your own discretion.

■ The arbitrary modification is not covered under warranty. When any repair required, please contact the customer service center.

■ If there is abnormal sound, smell or fume in the device, please unplug the power cord immediately and contact the customer service center.

■ When the device isn't used for a long time, the adaptor and memory card can be removed and placed in dry environment.

■When moving, please hand over the manual to new tenant for proper usage of the device.

FCC Radiation Exposure Statement:

This equipment complies with FCC radiation exposure limits set forth for an uncontrolled environment. This equipment should be installed and operated with minimum distance 20cm between the radiator & your body.

FCC Warning

This device complies with Part 15 of the FCC Rules. Operation is subject to the following two conditions:
(1) This device may not cause harmful interference, and (2) this device must accept any interference received, including interference that may cause undesired operation.

NOTE 1: This equipment has been tested and found to comply with the limits for a Class B digital device, pursuant to part 15 of the FCC Rules. These limits are designed to provide reasonable protection against harmful interference in a residential installation. This equipment generates uses and can radiate radio frequency energy and, if not installed and used in accordance with the instructions, may cause harmful interference to radio communications. However, there is no guarantee that interference will not occur in a particular installation. If this equipment does cause harmful interference to radio or television reception, which can be determined by turning the equipment off and on, the user is encouraged to try to correct the interference by one or more of the following measures:
- Reorient or relocate the receiving antenna.
- Increase the separation between the equipment and receiver.
-Connect the equipment into an outlet on a circuit different from that to which the receiver is connected.
-Consult the dealer or an experienced radio/TV technician for help.

NOTE 2: Any changes or modifications to this unit not expressly approved by the party responsible for compliance could void the user's authority to operate the equipment.

V1. 1

EASY & SMART INTERCOM SOLUTIONS

DNAKE