Step 18

Reconnect the cooking chamber lid (#29) by sliding the hinge pins into the hinges. Secure it with the washer and bolt removed in Step 1.
Screw the temperature gauge (#30) fully into the lid. Adjust the orientation and lock the gauge into position using the pre-attached nut.
If desired, install the utensil “S” hooks onto the side handle.
When needed, connect the meat probe to the controller by inserting the femal plug into the controller socket marked “Meat Probe”. If not in use, leave disconnected and store indoors.

CAUTION: When not in use, the rubber cap should be placed in the meat probe adaptor socket to keep rain or moisture from damaging the circuit board.

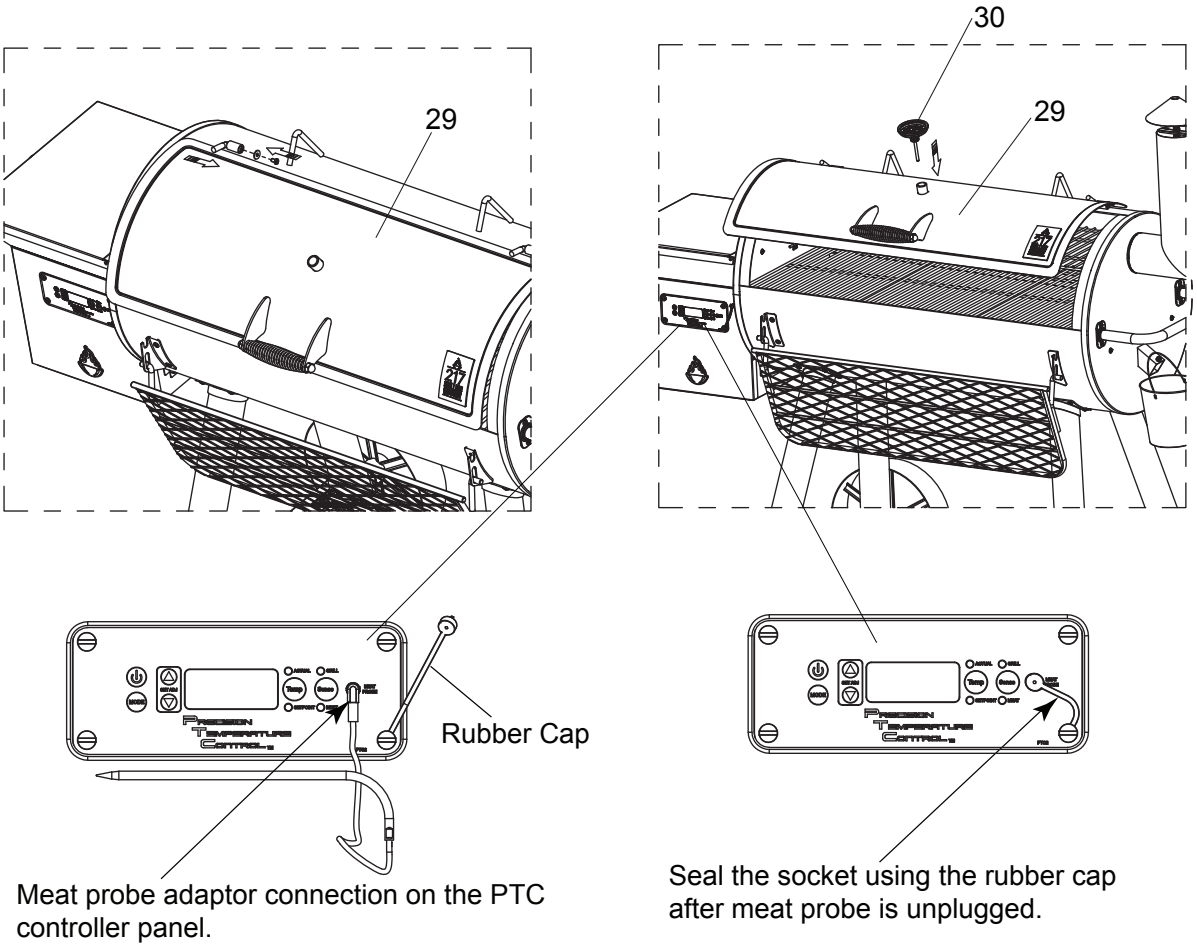

ELITE Pellet Grill

(Assembled)

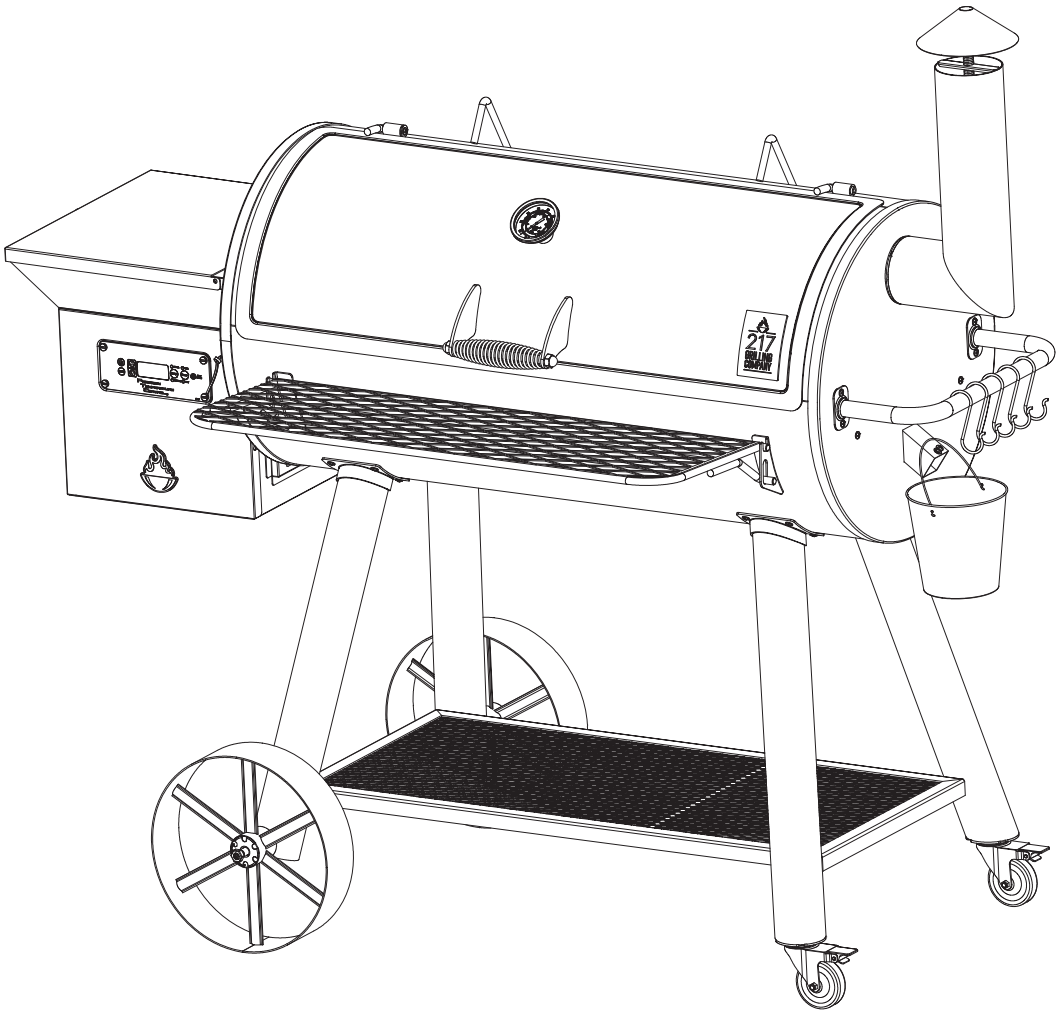

CONTROLLER OVERVIEW

NOTE:

- The maximum temperature that the pellet grill can achieve is influenced by the ambient temperature. In colder weather, the grill may not be able to achieve the highest set temperature and it will continually feed pellets into the fire pot attempting to reach the set temperature.
- There might be some discrepancy between the digital temperature displayed and the temperature observed on the analog lid gauge. Some variance is normal due to the location and calibration differences.
- When changing the operating temperature, allow up to 15 minutes for the temperature to stabilize. If lowering the temperature, it is best to leave the open lid for a few minutes to help decrease quicker.

CONTROLLER OVERVIEW

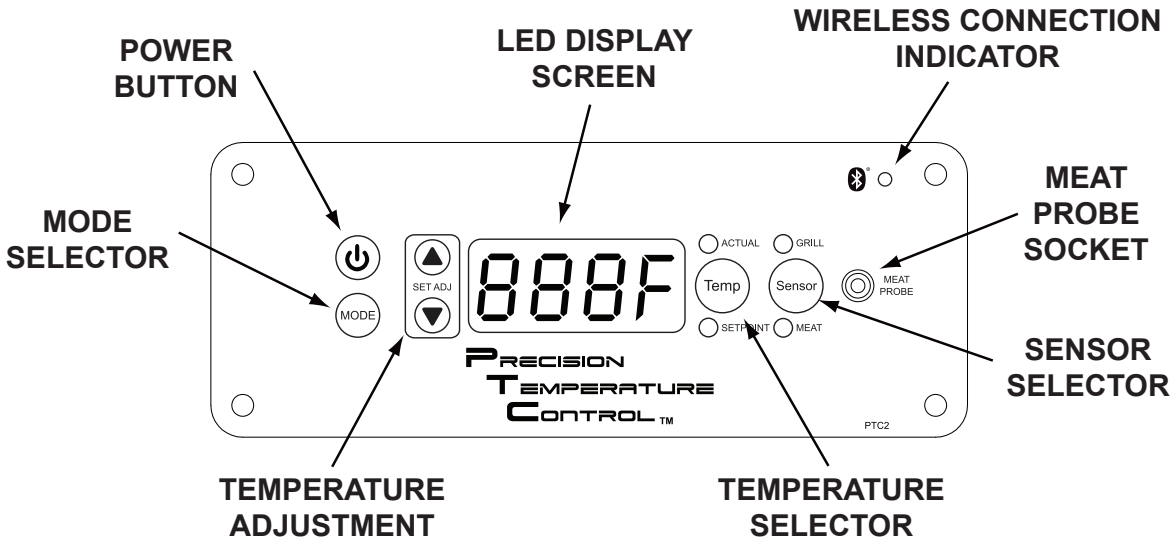

Mode Selector:
Used to toggle between Cook and Smoke modes.

Temperature Selector:
Used to toggle between the current grill temperature, indicated as “ACTUAL” and the desired cooking temperature, indicated as “SETPOINT”.

Temperature Adjustment:
Use the Up or Down buttons to adjust the temperature for both the grill and the meat probe.

Sensor Selector:
Used to toggle between the internal RTD, indicated as “GRILL” and the meat probe, indicated as “MEAT”.

Wireless Connection Indicator:
This LED will remain on when a device is connected. Otherwise, if will flash.

Default Cooking Mode

When powered on, the controller starts in cooking mode with a default set point of 350 F. In addition, the Temp defaults to SETPOINT. Simply press Up or Down SET ADJ buttons to change the temperature. Then press Temp to display ACTUAL for the internal grill temperature. Press MODE to toggle into Smoke mode (default temperature of 180 F) or press again to instantly reach the highest grilling temperature.

PREPARATION FOR USE & LIGHTING INSTRUCTIONS

⚠ PLACE THE SMOKER OUTDOORS ON A HARD, LEVEL, NON-COMBUSTIBLE SURFACE AWAY FROM ROOF, OVERHANG OR ANY COMBUSTIBLE MATERIAL. NEVER USE ON WOODEN OR OTHER SURFACES THAT COULD BURN. PLACE THE SMOKER AWAY FROM OPEN WINDOWS OR DOORS TO PREVENT SMOKE FROM ENTERING YOUR HOUSE. IN WINDY WEATHER OR RAINY WEATHER, PLACE THE SMOKER IN AN OUTDOOR AREA THAT IS PROTECTED FROM THE WIND AND RAIN.

⚠ READ ALL SAFETY WARNINGS AND INSTRUCTIONS CAREFULLY BEFORE OPERATING YOUR SMOKER.

PRECAUTIONS:

- Read and follow all warnings on Page 2 and 3 of this manual, before operating the smoker.
- For the first time operation of the grill, please follow the “SET UP PROCEDURE” to ensure the auger tube is fully loaded with pellets. For subsequent operation of the grill, please follow the “LIGHTING INSTRUCTIONS” to ignite the grill.

⚠ WARNING:

- Never add pellets to a hot fire pot by hand. You could be seriously burned. If the pellets run out or the fire goes out, wait until the grill cools down, and then follow the “SET UP PROCEDURE” to restart.
- Never put water in the fire pot as this could cause the auger to jam.
- Never use water to extinguish flare-ups. Close the lid and turn off the grill and wait for the fire to extinguish itself.
- Never use any flammable liquids, such as gasoline, gasoline-type lantern fuel, kerosene, charcoal lighter fluid, or similar liquids, to start or freshen-up the fire! Keep all such liquids well away from the grill while it is in use.

SETUP PROCEDURE

Follow this procedure before the first use and after every other use, or after a long cook time. This should ONLY be performed when the grill is cool, before being used.

NOTE: During shipping or moving around on your deck, some components may have shifted from position. A complete visual inspection of the smoker assembly is required. Follow these initial Setup Procedures to ensure proper and safe operation.

Step 1
Open the grill lid; remove the warming rack and cooking grids.

Step 2
Remove the grease tray and clean off any excess food drippings or grease build-up.

Step 3
Inspect and clean chamber right bracket. Ensure the drain tube is not blocked.

Step 4
Remove the flame tamer. Inspect the bottom of grill body and clean out pellet ash. Also inspect and clean out fire pot. Ensure there are no foreign objects in the fire pot and that the ignitor is clean and clear of debris.

NOTE: Line the bottom of the cooking chamber with heavy-duty aluminum foil. This will help prevent flare-ups as well as make cleaning easier.

Step 5
Open the hopper lid and check for any foreign objects. Fill the hopper with your choice of wood pellet fuel made for barbecue and close the hopper lid.

PREPARATION FOR USE & LIGHTING INSTRUCTIONS

Step 6
Plug the power cord into a properly grounded 110 V electrical outlet. DO NOT use if the ground tip has been removed from the power cord. DO NOT use an extension cord or ungrounded outlet.

Step 7
Press the power button to start the grill. By default, the grill will start in grill cooking mode with a a set point temperature of 350 F.

Step 8
Observe the auger turning as pellets fill the tube. Once pellets reach the fire pot, turn OFF the grill by pressing the power button. DO NOT reach into the fire pot.

Step 9
Re-install the flame tamer, grease tray, cooking grids and warming rack. Close the grill lid. The grill is now ready for use. Follow the LIGHTING INSTRUCTIONS to continue.

LIGHTING INSTRUCTIONS

AUTOMATIC METHOD

1. With the grill properly setup and located for operation, plug the power cord into a 110 V grounded electrical outlet. (Refer to SETUP PROCEDURE for more information.)
2. Open the grill lid. Ensure all components are properly installed and ready for use.
3. Ensure the hopper does not contain any foreign objects and is properly filled with barbecue wood pellets.
4. Press the power button to start the grill. Listen for operation of fan and auger motors.
   Within a few minutes smoke should become visible before the pellets ignite.
   If smoke does not initially appear, turn OFF power and wait 5 minutes before attempting to relight.
   (Refer to the troubleshooting section of the manual for more information.)
5. Close the grill lid.
6. Select the desired grilling temperature, or change to SMOKE mode for smoking.
   (Refer to COOKING INSTRUCTIONS for more operating information.)

⚠ **WARNING:**

- The pellet hopper must be properly setup with pellets in the auger tube prior to lighting the grill.
- Never add or use wood chips or particles in the hopper. Use only barbecue grade pellets.
- Use only extension cords with a 3 prong grounding plug rated for power of the equipment and approved for outdoor use with a W-A marking.
- Do not break the ground end off the cord or use a non-grounded outlet or extension cord.
- Never immerse cord, plugs or electric elements in water or any liquid.
- Never operate the grill with a damaged power cord or plug, or after the grill has malfunctioned or been damaged in any manner.
- Keep any power cord away from any heated surfaces.

NOTE: If the grill fails to light, inspect the fire pot for the presence of pellets or build-up of pellet ash. If the fire pot contains too much ash, clean it out using a shop vacuum. Also be certain the fan blower motor and auger are working by observing these parts after starting the smoker. If they are working, turn OFF the power and reassemble all components.

⚠ **WARNING:** Never inspect or perform maintenance on a hot grill. Allow to properly cool before inspecting or cleaning your grill.

LIGHTING INSTRUCTIONS & SHUT DOWN

LIGHTING INSTRUCTIONS

MANUAL METHOD

1. With the grill properly setup and located for operation, plug the power cord into a 110 V grounded electrical outlet. (Refer to SETUP PROCEDURE for more information.) DO NOT use if the ground tip has be removed from power cord. DO NOT use an extension cord or ungrounded electrical outlet.
2. Open the grill lid. Remove the warming rack, cooking grids, grease tray and flame tamer.
3. Ensure the fire pot and ignitor are clean and free of debris or foreign objects.
4. Place a generous handful of pellets into the fire pot.
5. Apply an approved wood pellet starter, like fire starter gel, over the pellets.
6. Using a long fireplace match or long lighter, light the starter and pellets.
7. After the pellets are burning well (up to 5 minutes), carefully replace the flame tamer, grease tray, cooking grids and warming rack.
8. Press the power button to start the fan and auger feed motor.
9. Close the grill lid.
10. Select the desired cooking temperature, or change to SMOKE mode for grilling. (Refer to COOKING INSTRUCTIONS for more operating information.)

NOTE: When the controller is ON, if the grill probe does not reach a temperature of 130 F within 20 minutes, the controller will turn OFF and the display will show “ER-2” (refer to Troubleshooting section for more information). Perform the following:

- Be certain the power is OFF.
- Inspect the hopper to verify it has enough pellets and that pellets can freely drop into the auger.
- After the grill has cooled, inspect the fire pot for ash build-up or blockage.
- Follow Lighting Instructions (Automatic or Manual).
- If the grill fails to light once again, refer to Trouble Shooting section and/or contact Customer Service for assistance.

SHUT DOWN INSTRUCTIONS

Press the power button to turn OFF the grill. The controller will begin its automatic SHUT DOWN procedure.

ATTENTION: AT THIS TIME, DO NOT DISCONNECT THE POWER!

The auger motor will stop feeding fuel and allowing the flames to burn out naturally. During this time the combustion/cooling fan will continue to run until a preset internal temperature is reached. When the procedure is complete, the fan and power will turn off automatically.

The SHUT DOWN procedure will take about 15 minutes. After it has turned off and properly cooled, disconnect the power cord and properly store the smoker.

CURING THE SMOKER

Before initial use, it recommended to cure the smoker to remove manufacturing oils or paint residue and minimize smoke odors or unnatural flavors from being added to food.

- Follow “Set Up Procedure” to ensure the grill is safe for operation.
- Follow “Lighting Instructions” to start the grill, then enter Cook mode.
- Set the temperature to 250 F and allow to operate for 2 hours.
- Increase the temperature to 400 F and allow to operate for an additional hour.
- Turn OFF the grill and allow to properly cool.

YOUR SMOKER IS NOW CURED AND READY FOR USE.

PREHEATING THE SMOKER

Prior to each use, preheat the smoker to remove bacteria or foreign material left from previous use. This also increases the cooking performance since all of the grids and components have balanced temperature. Without preheating, it takes much longer to food to cooking temperature.

- Follow “Set Up Procedure” to ensure the grill is safe for operation.
- Follow “Lighting Instructions” to start the grill, then enter Cook Mode and set to “HI”.
- Close the lid and allow the grill to maintain at least 400 F for about 10 minutes.
- Open lid, choose desired cooking mode and temperature. Leave lid open until the temperature is close to desired setting.
- Cook food as desired. *(See “Cooking Instructions” for more operating information.)*

COOKING INSTRUCTIONS

The pellet grill has two modes to control the pellet feeding speed. These are designated as the Cook Mode and the Smoke Mode. The Cook Mode is for grilling or slow cooking methods, while the Smoke Mode is for smoking and adding flavor to foods being prepared.

COOK MODE

The pellet grill’s default cooking method is Cook Mode.

In Cook mode, the grill will automatically maintain a set temperature by adding pellet fuel to the fire pot when needed by monitoring the internal grill temperature. During cooking, it is important to keep the grill lid closed for the grill to function properly.

NOTE:
The maximum temperature the pellet grill can achieve is influenced by the ambient temperature. In colder weather, the grill may not be able to achieve the highest set temperature and it will continually feed pellets into the fire pot attempting to reach the set temperature.

Begin by following the SET UP PROCEDURE and LIGHTING INSTRUCTIONS.

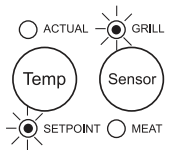

Set the desired Cook temperature by first pressing “Temp” so that “Setpoint” is illuminated. Be certain “Sensor” is set to “Grill”.

COOKING INSTRUCTIONS

Using the “SET ADJ” up or down arrow buttons, set the desired grilling temperature. The temperature adjusts in 5 degree increments and will be displayed on the LED Display.

NOTE: 600 F temperature setting is recommended to only be used for cleaning. However, in colder weather, it might be used for cooking to overcome the ambient temperature.

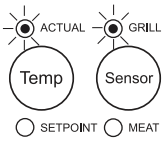

Once the desired temperature is set, press “Temp” to “ACTUAL” to display the current grill temperature.

NOTE: There might be some discrepancy between the digital temperature displayed and the temperature observed on the analog lid gauge. Some variance is normal due to location and calibration differences.

SMOKE MODE

The pellet grill’s default cooking method is COOK mode.

To enter SMOKE mode, press the “MODE” button once. In Smoke mode, the grill regulates the time that the auger feeds fuel to the fire pot. For the pellet system to produce more smoke, the temperature fluctuation from the set point will be larger than in cook mode.

NOTE: Experiment with various temperatures to fully understand the grill operation cooking temperatures and times before preparing food for the first time.

Begin by following the SET UP PROCEDURE and LIGHTING INSTRUCTIONS.

If not already, enter Smoke mode by pressing “MODE”.

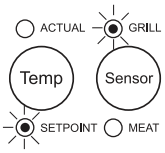

The default smoking temperature is 180 F. To change the target smoking temperature, with “Sensor” set to “GRILL”, press “Temp” to “SETPOINT” is active.

Using the “SET ADJ” up or down arrow buttons, set the desired smoking temperature. The temperature will be displayed on the LED Display.

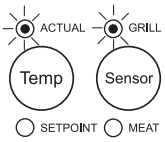

Once the desired temperature is set, press “Temp” to “ACTUAL” to display the current grill temperature.

NOTE: There might be some discrepancy between the digital temperature displayed and the temperature observed on the analog lid gauge. Some variance is normal due to location and calibration differences.

⚠ WARNING

NEVER add wood pellets to fire pot while it is HOT or in USE! Serious injury could result!

POST COOKING INSTRUCTIONS

After grilling or smoking your food, allow the grill run on the highest temperature setting for several minutes. Doing so will burn off excess juices and help clean the grill.

- Press “Mode” to quickly set the grilling temperature to 600 F.
- With lid closed, allow the grill to operate 5 to 15 minutes, depending on what was cooked, or the amount of residue/grease on the grids.
- Turn OFF the grill (refer to “Shut Down Instructions”).
- Using a long-handled grill cleaning brush, scrap clean the cooking grids.
- Once the grill has properly shut down and cooled, unplug the power cord and properly store the grill in a safe, dry place away from children and pets.

WARNING: Always wear dry, protective gloves or oven mitts when cooking or cleaning hot cooking grids.

IMPORTANT:

- Never move your smoker pellet grill while it is hot or in use.
- Make sure the flame tamer and grease tray are properly installed. If not properly installed, a grease fire could result.
- Adjust the chimney cap height for added temperature control. Upward decreases the temperature and downward increases. DO NOT COMPLETELY CLOSE CHIMNEY CAP.
- Use caution when handling food around the grill. All surfaces could become very HOT and may cause burns if touched.
- In Smoke Mode, for temperatures above 250 F, the grill may not produce smoke.

PROGRAMMABLE MEAT PROBE

The controller includes a meat probe alarm that can be used to alert you when the preset temperature is reached. It can be used in any cooking mode.

CONNECTION

Insert the Meat Probe’s 1/8” male plug into the jack socket on the controller faceplate. Press firmly to ensure it is fully seated. The meat probe can be connected any time during the grilling process.

OPERATION

After the grill has started, whether grilling or smoking, the meat probe alarm can be set.

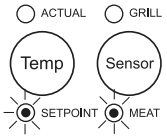

Press “Sensor” to select “MEAT”. Then press “Temp” to select “SETPOINT”.

Using the “SET ADJ” up or down arrow buttons, set the desired smoking temperature. The temperature will be displayed on the LED Display.

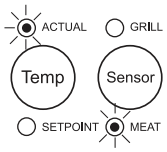

Once the desired temperature is set, press “Temp” to “ACTUAL” to display the current temperature measured by the meat probe.

When the meat probe temperatures reaches the desired set point, a beeping alarm will sound.

⚠ IMPORTANT:

- Keep the meat probe as clean and dry as possible. Clean with a damp, soapy cloth.
- If meat probe wires become wet, erroneous readings may occur. Allow the probe wires to dry completely before use.
- Do not submerge the meat probe when cleaning or place in dishwasher.
- Do not kink the wiring as this could cause damage.
- Do not allow the meat probe to make direct contact with flames.

CAUTION: When not in use, the rubber cap should be placed in the meat probe jack socket to keep rain or moisture from damaging the socket or circuit board.

WOOD PELLETS

Use ONLY wood pellets made for barbecue. Do NOT use heat grade fuel pellets. Barbecue wood pellets should be 100% all natural wood. They come in a variety of types of wood that will provide added flavor to your food during grilling or smoking.

If possible, always use fresh wood pellets for each cooking session to ensure they burn properly giving off the correct amount of heat and smoke flavor.

Store unused wood pellets in a safe, dry place, preferabley in a moisture proof plastic container with a resealable lid.

THE PTC APP

You can connect your phone to the grill's controller using *Bluetooth*® wireless technology. First, you will need to install the PTC app from either the App Store or Google Play on your smartphone.

Precision Temperature
Control smartphone app

Upon opening the PTC app, you will need to create an account by simply inputting an email address or phone number and create a password. A verification code will sent to activate the app for use, and is only required for the initial setup.

Connecting the Device

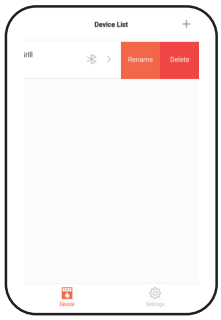

To connect to the PTC controller, enable your phone's Bluetooth wireless technology, power on the PTC controller and open the PTC app. Choose "Add Device" and then select the PTC Grill shown in the list. Once connected, the wireless connection indicator LED on the controller will remain illuminated.

The device name should now be shown in the device list. Press and slide left to reveal device options, where the device name can be changed or the device removed from the connection list.

Using the App

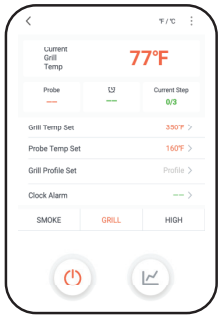

To use grill, select a cooking mode. To set a cooking temperature, tap the temperature shown to the right of "Grill Temp Set" and select the desired temperature.

Cooking Mode Defaults

Smoke: Default smoking temperature set to 180 F.
Grill: Default grilling temperature set to 350 F.
High: Default grilling temperature set to 600 F.

Meat Probe

To set an alarm for the meat probe, tap the temperature shown to the right of "Probe Temp Set" and select the desired the temperature. Once that temperature is reached, you will be notified.

Cooking Profile Programming

You can create a cooking profile that will adjust the cooking temperature and time for each temperature up to three cooking periods. To set the cooking profile, tap "Profile", shown to the right of "Grill Profile Set". Then enter the desired cooking temperature and time for each period. Upon leaving this screen, the cooking profile will start.

Alarm

The app also allows you to create an alarm, which is useful to remind you when to check, season, or flip the food. When the alarm time is reached, your phone should display a message, give audible feedback as well as vibration. These defaults can be adjusted from the settings gear icon before entering leaving the device list page.

THE PTC APP

Using the App

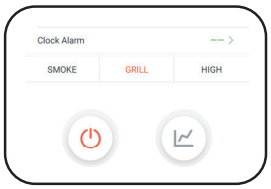

To enter shutdown mode and power off the grill, simply press the power button icon. This will start the pre-programmed shutdown process for the controller.

Any time during the smoking or grilling process, you may look at a chart that shows the data of the temperature curve. It is only a simple chart for a glance of the temperature performance.

Caution: Changes or modifications not expressly approved by Shinerich Industrial Ltd. could void the user's authority to operate the equipment.

Note: This equipment has been tested and found to comply with the limits for a Class B digital device, pursuant to part 15 of the FCC Rules. These limits are designed to provide reasonable protection against harmful interference in a residential installation. This equipment generates, uses and can radiate radio frequency energy and, if not installed and used in accordance with the instructions, may cause harmful interference to radio communications. However, there is no guarantee that interference will not occur in a particular installation. If this equipment does cause harmful interference to radio or television reception, which can be determined by turning the equipment off and on, the user is encouraged to try to correct the interference by one or more of the following measures:

- Reorient or relocate the receiving antenna.
- Increase the separation between the equipment and receiver.
- Connect the equipment into an outlet on a circuit different from that to which the receiver is connected.
- Consult the dealer or an experienced radio/TV technician for help.

This equipment complies with FCC’s RF radiation exposure limits set forth for an uncontrolled environment. The antenna(s) used for this transmitter must be installed and operated to provide a separation distance of at least 20 cm from all persons and must not be collocated or operating in conjunction with any other antenna or transmitter. Installers must ensure that 20 cm separation distance will be maintained between the device (excluding its handset) and users.

GRILLING TIPS & CLEANLINESS

- If you pre-cook meat or poultry, do so immediately before grilling.
- Never defrost meat at room temperature or on a countertop.
- Refrigerate leftovers within 2 hours of taking off the grill.
- Always wash hands thoroughly with soap and hot water prior to handling food and after handling raw meat, uncooked poultry or seafood.
- When using a platter to carry raw meat, uncooked poultry or seafood, make sure to wash the platter thoroughly with soap and hot water before placing cooked foods back on the platter.
- Never use the same utensils when handling raw meat, uncooked poultry or seafood unless you wash the utensils thoroughly with soap and hot water.
- Never re-use marinade from raw meat or uncooked poultry on foods that have been cooked and are ready to serve.
- ALWAYS keep your grill clean and stored in a safe, dry place.
- After the food has finished cooking and has been removed, set the grill to a high temperature to help remove food residue and drippings. If a fire occurs, do not unlug the power cord. Keep the lid closed and turn press the power button to turn the grill OFF. The fire should burn itself out shortly while the grill is in shut down mode. Do not leave the grill unattended!
- Preheat the grill before setting the desired grilling temperature or entering smoke mode. Thils will not only get the grids hot, but also help the grids and other parts remain hygienic.
- Clean or wipe off cooking grids prior to use to help reduce food stains or flare ups.
- Ensure the grease cup is clean before each use. To make clean up easier, place foil inside the cup as a liner.
- Never spray vegetable oil onto hot cooking grids.
- Keep the lid closed while grilling or smoking. The pellet system operates based off the internal temperature of the grill.
- During lengthy cooking, periodically check the hopper for the amount of wood pellets. DO NOT reach into the hopper while the grill is operating.
- Disconnect, clean and store the meat probe indoors, out of reach of children.
- Practice makes perfect. As with any smoker or grill, the more you use it, the more you understand the cooking temperatures and performance.

CARE AND MAINTENANCE

Cleaning the Grill Body

Use warm, soapy water to clean the inside and outside of the grill body with a cloth and then wipe it dry. Treat the interior surface of grill body with a light coat of vegetable oil and then wipe it dry periodically to prevent rusting.
DO NOT use oven cleaners, abrasive cleaners or abrasive cleaning pads on the surface of the grill body.

Cleaning the Cooking Grid and Grease Tray

With a cloth, use warm, soapy water to wash the cooking grids and grease deflector and then wipe them dry. Lightly coating them with vegetable or olive oil will help prevent corrosion. After removing cooked food and grids are still hot, carefully brush the cooking grids with a long handled cleaning brush. Wear oven mitt or gloves when around a hot grill.

Cleaning the Grease Cup

For easier cleaning, use aluminum foil to line the grease cup. Periodically, clean or replace the aluminum foil liner. Keep excess grease out of the grease cup and the interior of grill body. If too much grease collects inside the grill or within the grease cup, a grease fire could result.

Removing Wood Pellet Ash

Depending on use, periodically remove wood pellet ash that has collected within the fire pot and grill body or other parts. With the grill COLD and UNPLUGGED, remove the cooking grids and grease deflector for access into the fire pot and grill body. Vacuum the wood pellet ash residue out of the fire pot and grill body interior using a shop vacuum.

Storing the Grill

Disconnect the power cord and store the grill in a dry, safe place away from children and pets. If the grill is stored outdoors, make certain it is properly protected to prevent water from entering the hopper and grill body interior. If possible, do not leave wood pellets in the hopper during storage.

Paint and Corrosion

Never apply paint to interior surfaces. Rust spots on the interior can be buffed, cleaned and then lightly coated with vegetable oil or vegetable oil spray. Maintaining a light coat of oil will help minimize rusting.

To protect against excessive rust, keep the grill clean and covered at all times when not in use.

Proper cleaning, maintenance and the use of clean, dry, quality pellet fuel will prevent common grill operational problems. However, in the event of poor operation or product failure, refer to “Troubleshooting” section for helpful tips.

Customer Service

(866) 814-0585, Monday through Friday from 8 a.m. to 8 p.m. EST

⚠ DO NOT RETURN the appliance to the store. Contact Customer Service for assistance first.

⚠ **WARNING:** Always disconnect the electrical cord prior to inspecting, cleaning, maintenance or service work.

⚠ NEVER perform any inspection, cleaning, maintenance or service on a HOT GRILL.

PROBLEM	CAUSE	SOLUTION
Command Center will not turn ON	Electrical connection failure.	• Check cord plugged into GFCI outlet. • Verify wiring connections are firmly connected.
	Blown fuse on circuit board.	Replace fuse found on back of circuit board.
	GFCI outlet tripped.	Reset GFCI breaker.
Display Code: Er-1	Overheating due to fire or excess pellet fuel in fire pot.	Unplug the power cord and allow grill to cool. Remove excess pellets from fire pot, if any, and inspect all components for possible damage.
	Grill thermocouple connection or failure.	Unplug the power cord and allow grill to cool. Ensure thermocouple wiring is properly connected and inspect for possible damage.
Display Code: Er-2	Grill failed to start properly (internal temperature was below Start Up program).	Unplug the power cord and be certain grill is cool before inspecting the following: • wood pellet fuel level in Hopper • ash build-up in Fire Pot • jam in Auger Tube • Ignitor failure • Combustion/Cooling Fan failure • Grill Thermocouple failure NOTE: In colder weather, lighting the grill may take more than one attempt.
Display Code: noPr	Missing or failed connection of the Meat Probe.	• Check Meat Probe is correctly connected to the Meat Probe Input. • Inspect Meat Probe wire for damage.
“Actual” temperature shown on LED Display does not change during operation	Thermocouple is dirty, corroded or blocked.	Inspect and clean the thermocouple using a warm soap and water mixture; dry with a clean cloth and ensure it is not obstructed by foreign objects or residue.
	Thermocouple is damaged.	Replace thermocouple.
	Connection is wet.	Dry the Meat Probe connection using a hair dryer.
Combustion/Cooling Fan turned itself ON	Internal grill temperature is high.	• Turn OFF Main Power Switch or unplug cord. • Move grill into shaded area. • Open lid and allow the grill to cool.

PROBLEM	CAUSE	SOLUTION
Grill will not reach or maintain set temperature	Grill will not reach or maintain set temperature	Inspect the Combustion/Cooling Fan is operating properly. Ensure the air intake on the hopper housing is not blocked and the fan blades are clean.
	Insufficient wood pellet fuel	• Verify the Hopper has enough pellet fuel for operation. • Verify the wood pellets are dry.
	Incorrect display setting	Ensure “Probe” button is set to “Grill” and “Temp” button is set to “Actual”.
Grill will not light automatically	Damaged or broken Ignitor	Replace Ignitor.
	No pellets in the Fire Pot	• Verify sufficient amount of pellets in Hopper. • Verify Auger Motor functions properly.
Dark, excessive smoke	Grease fire	• Turn OFF grill and allow the fire to naturally burn out. If it continues, call fire department. • Once the grill has cooled, clean the grill.
	Improper or wet wood pellets	Ensure the use of proper, dry barbecue wood pellets.
Frequent Flare-Ups	Grease residue.	Clean cooking grids and grease deflector.
	Cooking temperature too high.	Decrease grilling temperature, especially for fatty foods.

Control Board Wiring Diagram

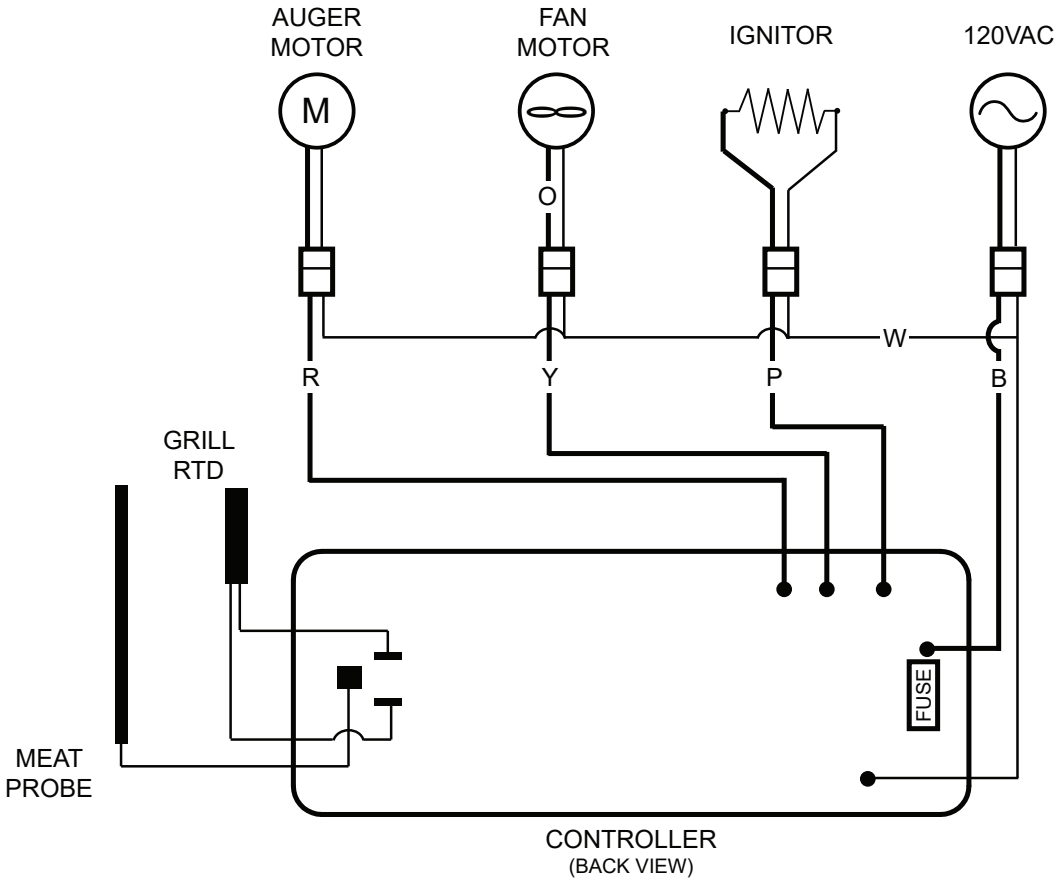

COLOR CODE:
B . . . . BLACK
O . . . . ORANGE
P . . . . PURPLE
R . . . . RED
W . . . .WHITE (COMMON)
Y . . . . YELLOW

NOTE: A cartridge located on the back of the control board houses a 5 amp, 120 volt fast blow fuse. If any electrical issues occur (short circuits or power surges), inspect this fuse. Replace when necessary.

WARRANTY INFORMATION

This appliance has been manufactured under the highest standards of quality and workmanship.
We warrant to the original consumer/purchaser that all aspects of this product will be free of defects in material and workmanship for one year from the date of purchase.
A replacement for any defective part will be supplied free of charge for installation by the consumer.
Defects or damage caused by the use of other than genuine parts are not covered by this warranty.
This warranty shall be eff ective from the date of purchase as shown in the purchaser's receipt.

This warranty is valid for the original consumer/purchaser only and excludes industrial, commercial or business use of the product, damage due to shipment or failure which results from alteration, product abuse or product misuse, whether performed by a contractor, service company or consumer.
We will not be response for labor charges and/or damage incurred in installation, repair or replacement, nor for incidental or consequential damage.

Need help?
Call our toll free number
1-866-814-0585

The Bluetooth® word mark and logos are registered trademarks owned by Bluetooth SIG, Inc. and any use of such marks by Shinerich Industrial Ltd is under license. Other trademarks and trade names are those of their respective owners.