Wireless Tailgate Speaker

User's Guide for Model ISB199 v2352-01

Important Safety Instructions

- Read these Instructions.
- Keep these Instructions.
- Heed all Warnings.
- Follow all instructions.
- Do not use this apparatus near water.
- Clean only with a dry cloth.
- Do not block any ventilation openings. Install in accordance with the manufacturer's instructions.
- Do not install near any heat sources such as radiators, heat registers, stoves, or other apparatus (including amplifiers) that produce heat.
- Do not defeat the safety purpose of the polarized or grounding - type plug. A polarized plug has two blades with one wider than the other. A grounding type plug has two blades and a third grounding prong. The wide blade or the third prong are provided for your safety. When the provided plug does not fit into your outlet, consult an electrician for replacement of the obsolete outlet.
- Protect the power cord from being walked on or pinched particularly at plugs, convenience receptacles, and the point where they exit from the apparatus.
- Only use attachments/accessories specified by the manufacturer.
- Unplug this apparatus during lightning storms or when unused for long periods of time.
- Refer all servicing to qualified service personnel. Servicing is required when the apparatus has been damaged in any way, such as power-supply cord or plug is damaged, liquid has been spilled or objects have fallen into the apparatus, the apparatus has been exposed to rain or moisture, does not operate normally, or has been dropped.
- Use only with a cart, stand, tripod, bracket, or table specified by the manufacturer, or sold with the apparatus. When a cart is used, use caution when moving the cart/apparatus combination to avoid injury from tip-over.

FCC Warnings

Warning: Changes or modifications to this unit not expressly approved by the party responsible for compliance could void the user's authority to operate the equipment.

NOTE: This equipment has been tested and found to comply with the limits for a Class B digital device, pursuant to Part 15 of the FCC Rules. These limits are designed to provide reasonable protection against harmful interference in a residential installation. This equipment generates, uses, and can radiate radio frequency energy and, if not installed and used in accordance with the instructions, may cause harmful interference to radio communications. However, there is no guarantee that interference will not occur in a particular installation. If this equipment does cause harmful interference to radio or television reception, which can be determined by turning the equipment off and on, the user is encouraged to try to correct the interference by one or more of the following measures:

- Reorient or relocate the receiving antenna.
- Increase the separation between the equipment and receiver.
- Connect the equipment into an outlet on a circuit different from that to which the receiver is connected.
- Consult the dealer or an experienced radio/TV technician for help.

Additional Warnings and Precautions

- **CAUTION**: TO PREVENT ELECTRIC SHOCK, MATCH WIDE BLADE OF PLUG TO WIDE SLOT, FULLY INSERT.
- Mains plug is used as disconnect device and it should remain readily operable during intended use. In order to disconnect the apparatus from the mains completely, the mains plug should be disconnected from the mains socket outlet completely.
- **WARNING**: Shock hazard - Do Not Open.
- **CAUTION:** Use of controls or adjustments or performance of procedures other than those specified may result in hazardous radiation exposure.
- **WARNING:** Changes or modifications to this unit not expressly approved by the party responsible for compliance could void the user's authority to operate the equipment.
- **WARNING:** Do not place this unit directly onto furniture surfaces with any type of soft, porous, or sensitive finish. As with any rubber compound made with oils, the feet could cause marks or staining where the feet reside. We recommend using a protective barrier such as a cloth or a piece of glass between the unit and the surface to reduce the risk of damage and/or staining.
- **WARNING:** Do not ingest battery, chemical burn hazard.
- Battery shall not be exposed to excessive heat such as sunshine, fire or the like.
- Lithium batteries, like all rechargeable batteries, are recyclable and should be recycled or disposed of according to state and local guidelines. They should never be disposed of in normal household waste and they should never be incinerated, as they might explode. Contact your local government for disposal or recycling practices in your area.

CAUTION RISK OF ELECTRIC SHOCK DO NOT OPEN
ATTENTION RISQUE D' ELECTROCUTION NE PAS OUVRIR

WARNING: To reduce the risk of electric shock, do not remove cover (or back). No user-serviceable parts inside. Refer servicing to qualified service personnel.

The exclamation point within an equilateral triangle is intended to alert the user to the presence of important operating and maintenance (servicing) instructions in the literature accompanying the appliance.

The lightning flash with arrowhead symbol, within an equilateral triangle, is intended to alert the user to the presence of un-insulated "dangerous voltage" within the product's enclosure that may be of sufficient magnitude to constitute a risk of electric shock to persons.

This symbol indicates that this product incorporates double insulation between hazardous mains voltage and user accessible parts.

"WARNING : Cancer and Reproductive harm - www.P65Warnings.ca.gov."

Overview

Features

- Bluetooth 5 wireless - range 60 ft.
- Voice prompts announce speaker functions
- Single 3" speaker
- LED color changing lights
- FM radio
- 3.5mm Aux In
- MicroSD card port - supports MP3 file format and MicroSD cards up to 64GB
- USB port - supports MP3 file format
- Built-in rechargeable battery
- Battery life: approx. 3 hrs playtime at 100% volume

Includes

- USB cable for battery recharge

Control Panel

1. **USB Media Port**
2. **MicroSD Card Media Port**
3. **DC Power Input:** Use to charge the internal battery and power the speaker.
4. **Aux In (3.5mm Audio Input)**
5. **Power OFF/ON/LIGHTS:** Switch to ON to power the speaker only. Switch to LIGHTS to power both the speaker and the LED lights.
6. **Source :** Press to change play mode: Bluetooth/Aux/FM. Press and hold to pair to a Bluetooth device.
7. **Volume/Skip :** Short press to adjust the volume level. Press and hold to skip audio tracks (BLUETOOTH/USB/SD) or radio presets (FM).
8. **▶|| FM Scan:** Press and hold to scan radio frequencies and save radio stations. Press to play or pause tracks (BLUETOOTH/USB/SD).

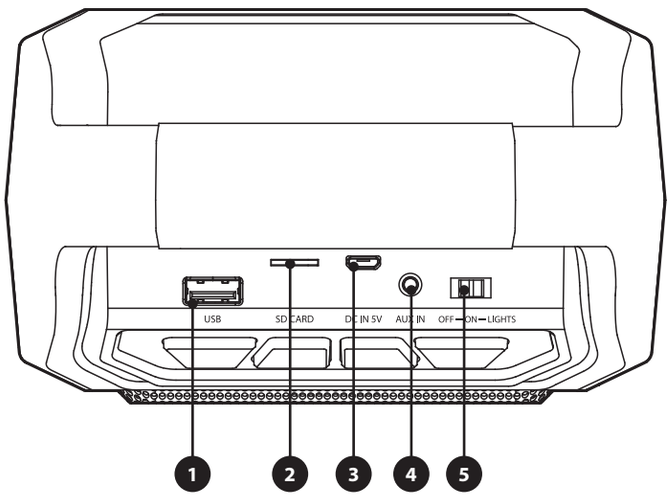

Top View

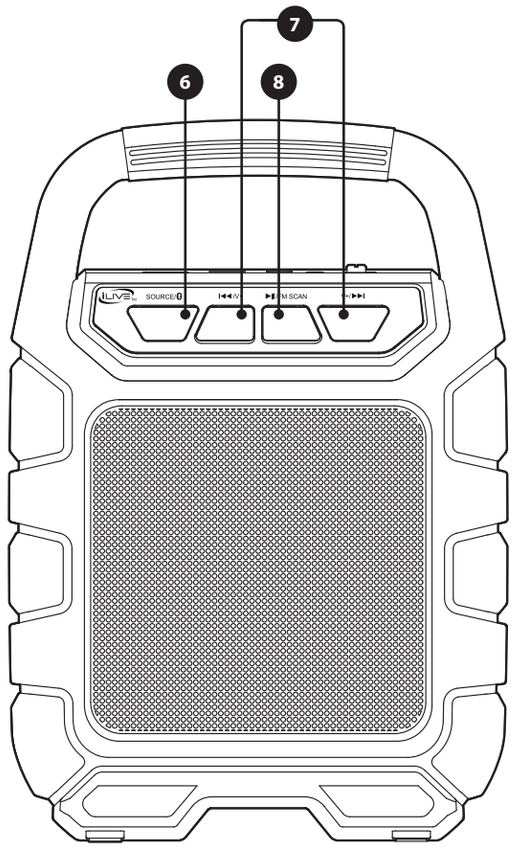

Front View

Charging the Battery

To charge the internal battery, plug the USB charging cable into the DC Power Input on the speaker and a powered on computer or USB power adapter (not included) and standard power outlet. Charging time is approximately 2.5 hours. Battery life is approximately 3 hours. Battery life can be extended by playing at lower volume levels.

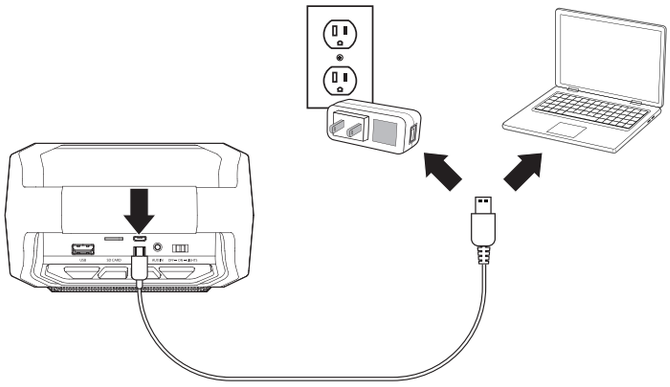

Bluetooth Wireless

Pairing & Playing Audio

When first powered on, the speaker defaults to Bluetooth Mode, indicated by a voice prompt. All other play modes will change automatically when connected to the different audio sources.

1. Power on the speaker by adjusting the Power Switch to the ON or LIGHTS position. The speaker defaults to Bluetooth Mode and is ready to pair automatically. When pairing, remain within 3 feet of the Bluetooth device.
2. Using the controls on your Bluetooth device, select **ISB199** in the Bluetooth Settings to pair. If need be, refer to the user's manual for your specific device for more information.
3. When successfully paired, a voice will announce, "Bluetooth is connected." Your Bluetooth device will now be heard through the speaker.
4. Use the controls on the connected Bluetooth device to select and play audio. Use the speaker controls or the connected Bluetooth device to play, pause, and adjust the volume level.
5. After initial pairing, the speaker will automatically connect to the last Bluetooth device used whenever it is in Bluetooth Mode. **Note:** If your device should become unpaired or you find it is unable to connect, press & hold the button to enter to Pairing Mode. A voice will announce, "Bluetooth is connecting," and you can connect to the speaker manually.

FM Radio

Radio Reception

An FM receiver is built into the speaker. Adjust the position of the speaker to improve FM radio reception.

Radio Tuning and Saving Station Presets

1. Press the **Source** button to select **FM Radio Mode,** indicated by a voice prompt.
2. Press and hold the **▶II button** to scan and save radio stations automatically.
3. Press and hold the **|◀◀ ▶▶| buttons** to cycle through saved radio stations.

USB

1. Load a USB drive into the USB Media port. The speaker will automatically switch to USB Mode, indicated by a voice prompt, and begin playing media on the drive.
2. Use the controls on the speaker to select and play audio from the connected drive.

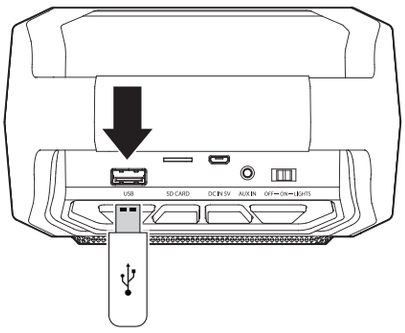

MicroSD Memory Card

1. Load a MicroSD memory card into the MicroSD memory card port. The speaker will automatically switch to SD Card Mode, indicated by a voice prompt, and begin playing media on the card.
2. Use the controls on the speaker to play, pause, and skip audio on the card.

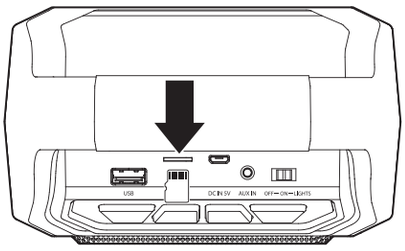

Aux In

Requires a 3.5mm audio cable (not included).

1. Connect a 3.5mm audio cable to the **Aux In** on the unit and the **audio output/ headphone jack** on an audio device.
2. Press **Source** to switch to **Aux Mode.**
3. Use the controls on the connected device to select and play audio. Be sure the volume on your connected device is audible when you begin playing.

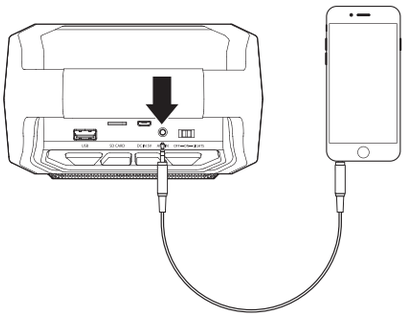

Customer Support

To download this User's Guide in English, Spanish, or French, or to get answers to frequently asked questions, visit the support section at: **www.iLiveElectronics.com**

Para descargar este Manual del Usuario en inglés, español y francés, o para obtener respuestas a preguntas frecuentes, visite la sección de apoyo en: **www.iLiveElectronics.com**

Pour télécharger ce guide de l'utilisateur en anglais, espagnol ou français, ou pour obtenir des réponses à des questions fréquemment posées, consultez la rubrique d'assistance sur: **www.iLiveElectronics.com**

For Warranty Information and the most up-to-date version of this User's Guide, go to **www.iLiveElectronics.com**

Customer Service: **1-888-999-4215 |** Email Support: **prodinfo@dpiinc.com |** Email Parts: **partsinfo@dpiinc.com**

Copyright © 2019 Digital Products International (DPI, Inc.) All other trademarks appearing herein are the property of their respective owners. Specifications are subject to change without notice.

Made Green

Protect for Today
Sustain for Tomorrow