Vinoil

VLS-83

2.1CH Soundbar

USER MANUAL

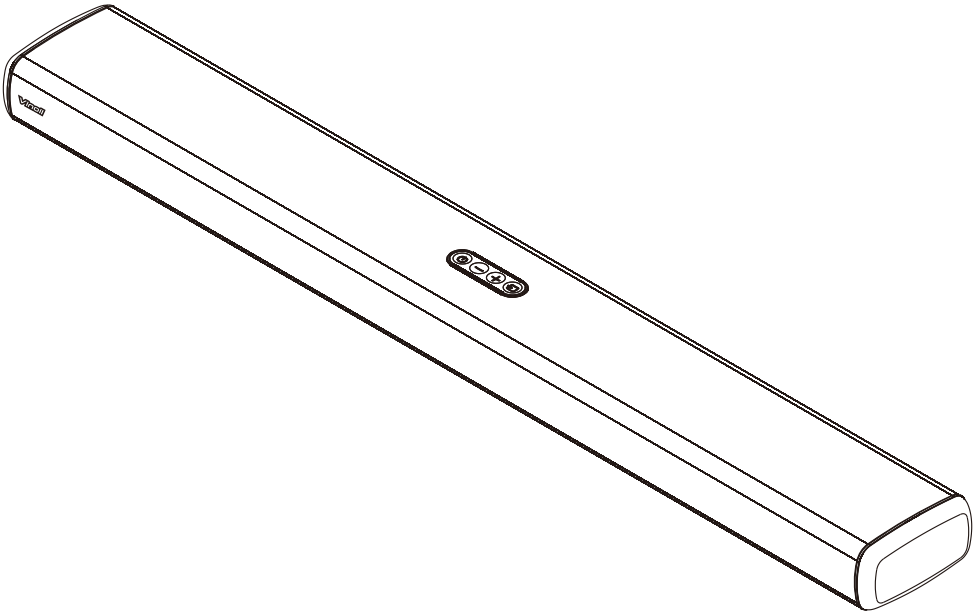

Important Safety Instruction

Thank you for purchasing the VLS-83 Soundbar. Please read this user manual carefully and keep for future reference. If you need any assistance, please contact our support team with your product model number and Amazon order number.

Warning

Caution:

To reduce the risk of electric shock, do not dismantle the product and do not expose the apparatus to rain or moisture. No user-serviceable parts inside.
Refer servicing to qualified personnel only

The lightning flash within an equilateral triangle is intended to alert you to the presence of uninsulated dangerous voltage within the product's enclosure that may be of sufficient magnitude to constitute an electric shock to a person or persons.

Important! This symbol alerts you to read and observe important warnings and instructions on the unit or in this manual.

Notice:

This appliance is not intended for use by persons (including children) with reduced physical sensory or mental capabilities, or lack of experience and knowledge, unless they have been given supervision or instruction concerning use of the appliance by a person responsible for their safety. Children should be supervised to ensure that they do not play with the appliance.

1. To prevent possible hearing damage, do not listen at high volume levels for long time periods or a sudden high volume level.

2. Never use the device unsupervised! Switch off the device whenever you are not using it, even if not using it only for a short while.
3. The appliance is not intended to be operated by means of an external timer or separate remote control system.
4. If the supply cord is damaged, it must be replaced by the manufacturer, its service agent or similarly qualified persons in order to avoid a hazard.
5. Before operating this system, check the voltage of this system to see if it is identical to the voltage of your local power supply.

6. The unit should not be impeded by covering the ventilation opening with items such as newspaper, table-cloths, curtains etc. Make sure that there are at least 20 cm of space above and at least 5 cm of space on each side of the unit.
7. The apparatus must not be exposed to dripping or splashing and that objects filled with liquids, such as vases, must not be placed on the apparatus.
8. To prevent fire or shock hazard, do not expose this equipment to direct heat, rain, moisture or dust.
9. Do not locate this unit near any water sources e.g. taps, bathtubs, washing machines or swimming pools. Ensure that you place the unit on a dry, stable surface.
10. Do not place this unit close to a strong magnetic field.
11. Do not place the unit on a amplifier or receiver.
12. Do not place this unit in a damp area as the moisture will affect the life of electric components.
13. Do not attempt to clean the unit with chemical solvents as this might damage the finish. Wipe with a clean, dry or slightly damp cloth.
14. When removing the power plug from the wall outlet, always pull directly on the plug, never pull on the cord.
15. Depending on the electromagnetic waves used by a television broadcast, if a TV is turned on near this unit while it is also on, lines might appear on the TV screen. Neither this unit nor the TV is malfunctioning. If you see such lines, keep this unit well away from the TV set.
16. The mains plug is used to disconnect the device, the disconnected device should remain readily operable.

Important Safety Instructions

1. Read these instructions. Keep these instructions. Follow all instructions. Heed all warnings.
2. Do not use this apparatus near water.
3. Clean only with dry cloth.
4. Do not block any ventilation openings. Install in accordance with the manufacturer's instructions.
5. Do not install near any heat sources such as radiators, heaters, stoves, or other apparatus (including amplifiers) that produce heat.
6. Do not defeat the safety purpose of the polarized or grounding-type plug. A polarized plug has two blades with one wider than the other.
7. Protect the power cord from being walked on or pinched particularly at plugs, convenience receptacles or at the point where they exit from the apparatus.
8. Only use attachments/accessories specified by the manufacturer.
9. Unplug this apparatus during lightning storms or when unused for long periods of time.

10. Refer all servicing to qualified service personal. Servicing is required when the apparatus has been damage in any way, for example, when the power-supply cord or plug is damaged, liquid has been spilled or objects have fallen into the apparatus, the apparatus has been exposed to rain or moisture, does not operate normally, or has been dropped.

11. The AC plug is used to disconnect the device, the disconnected device should remain readily operable. In order to disconnect the apparatus from the AC power completely, the AC plug must be removed from the AC outlet completely.

Preparation for Use

Unpacking and Set Up

•Remove the Sound bar from the carton and remove all packing material from the Sound bar. Save the packing material, if possible, in case the Sound bar ever needs to be serviced or transported. The original carton and packing material is the only safe way to pack your Sound bar to protect it from damage in transit.

•Remove any descriptive labels or stickers on the front or top of the cabinet. Do not remove any labels or stickers from the back or bottom of the cabinet.

•Place your Sound bar on a level surface such as a table, desk or shelf, convenient to an AC outlet, out of direct sunlight, and away from sources of excess heat, dirt, dust, moisture, humidity, or vibration.

•Unwind the Line cord connecting the AC adapter and extend it to its full length.

Protect Your Furniture

This model is equipped with non-skid rubber 'feet' to prevent the product from moving when you operate the controls. These 'feet' are made from non-migrating rubber material specially formulated to avoid leaving any marks or stains on your furniture. However certain types of oil based furniture polishes, wood preservatives, or cleaning sprays may cause the rubber 'feet' to soften, and leave marks or a rubber residue on the furniture. To prevent any damage to your furniture we strongly recommend that you purchase small self-adhesive felt pads, available at hardware stores and home improvement center everywhere, and apply these pads to the bottom of the rubber 'feet' before you place the unit.

Power Source

This sound bar is designed to operate on normal AC Power source. For Europe, it works only under SMPS 110V-240V～50hz/60Hz. Do not attempt to operate the Sound bar on any other power source. You could cause damage to the Sound bar that is not covered by your warranty.

Important Notes

• This sound bar was especially developed for LED/LCD/Plasma TV's: It should not be used in combination with CRTTV's (Cathode Ray Tube TV's) in order to avoid image interference.

• Safety and operating instruction manual should be retained for future reference.

• The apparatus should not be exposed to dripping, splashing or placed in a humid atmosphere such as a bathroom.

• Do not install the product in the following areas:

• Places exposed to direct sunlight or close to radiators.

• On top of other stereo equipment that radiate too much heat -Blocking ventilation or in a dusty area.

• Areas where there is constant vibration.

• Humid or moist places.

• Do not place near candles or other flames.

• Operate the product only as instructed in this manual.

• Before turning on the power for the first time, make sure the sound bar is plugged to power outlet.

• For safety reasons, do not remove any covers or attempt to gain access to the inside of the product. Refer any servicing to qualified personnel.

• Do not attempt to remove any screws, or open the casing of the unit; there are no user serviceable parts inside. Refer all servicing to qualified service personnel.

Product Diagram

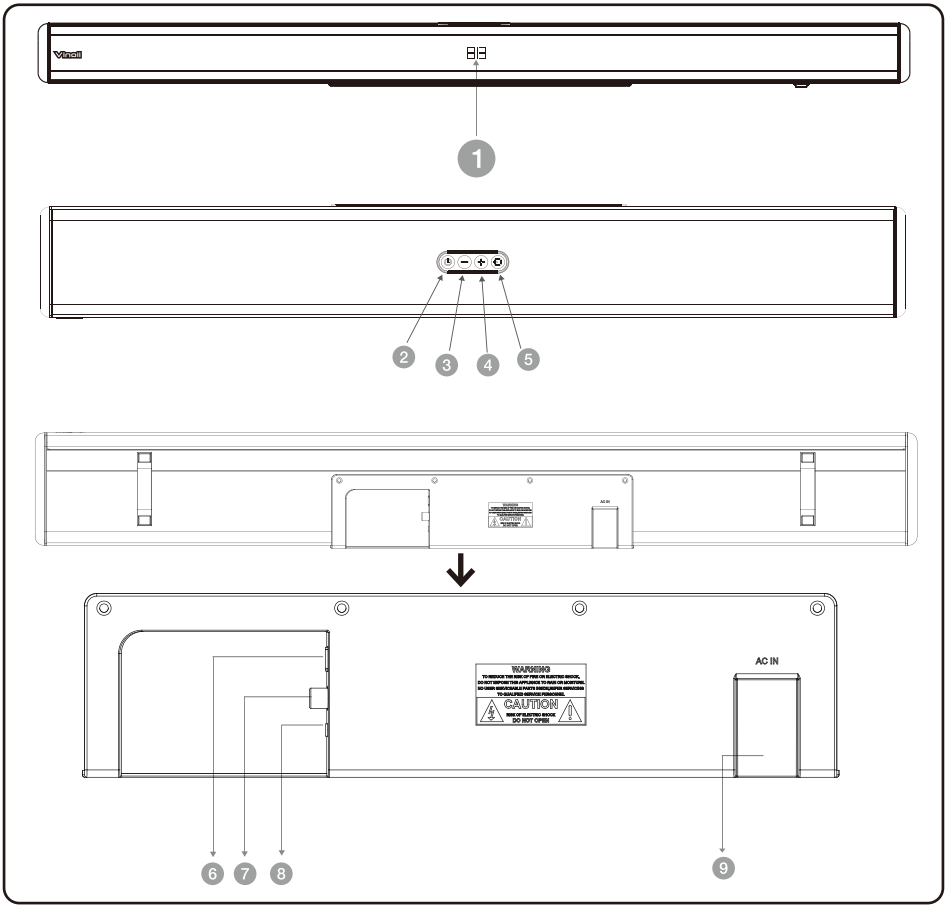

1 DISPLAY

2 INPUT STANDBY

3 VOL-

4 VOL+

5 INPUT

6 OPTICAL

7 COAXIAL

8 AUX

9 AC IN

Remote Control

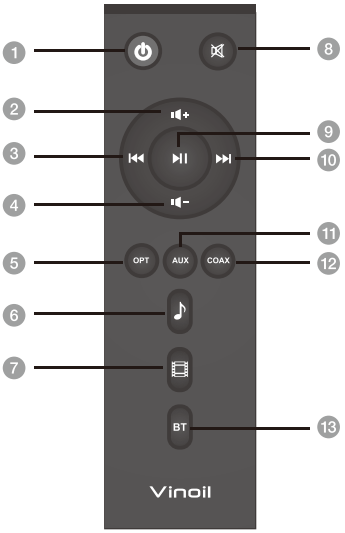

1. Standby mode for power on/off.
2. Volume increase.
3. Prev song.(only work under BT mode.)
4. Volume decrease.
5. OPT — OPTICAL selection.
6. Select the MUSIC EQ effect.
7. Select the Movie EQ effect.
8. Mute mode.
9. Play/Pause/Reset
10. Next song.(only work under BT mode.)
11. AUX — AUX selection.
12. COAX — COAXIAL selection.
13. BT — Press and hold more than 2 sec. to disconnect paired BT device. Press within 2 sec. to be BT mode.

Positioning the Sound Bar

Place on a flat Surface

Place the sound bar horizontally on a flat surface such as a TV unit or shelves and align it centrally with the TV screen. Allow some space between the speaker and the wall. Don't place inside a cabinet or an a walled shelf. Follow this guidance for best sound output and good airflow around the sound bar.

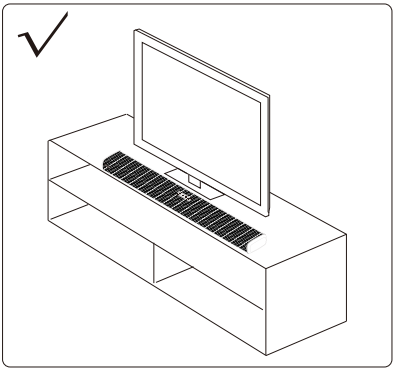

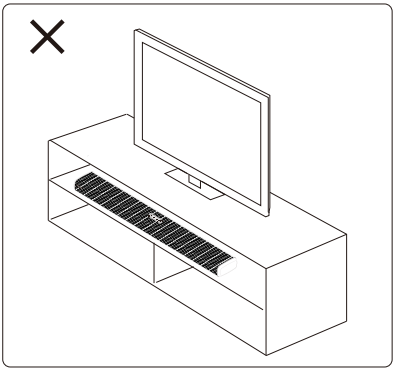

Mount on the wall

WARNING: If you don't feel confident to correctly and securely wall-mount the sound bar, Seek the assistance of an experienced person of professional.

Install the speaker on a vertical, fast, reinforced area of wall. For plaster walls, it is recommended to screw into wall studs for greater security. For optimum performance, allow at least 25mm/1''distance between the sound bar and the TV.

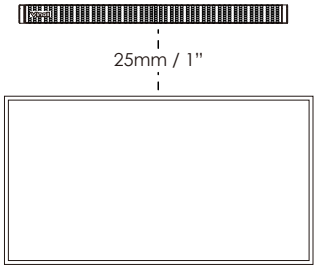

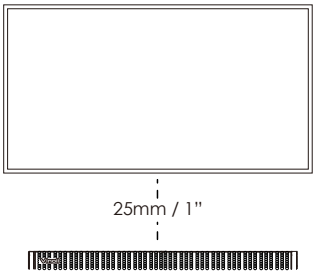

Follow below steps to mount the sound bar on the wall

1. Make 2 holes on the wall with distance same as the wall bracket on the soundbar
2. Put the plastic anchors onto the wall and secure the screws to the plastic clip, do not tighten the screws all the way make sure leave some space
3. Attached the 2 EVA pads onto the wall mount backet. This will make sure that there is enough room between the wall and the soundbar outlet, minimum 15mm
4. Once the screws securely fastened, hang the sound bar over by inserting the screws onto the wall mount bracket

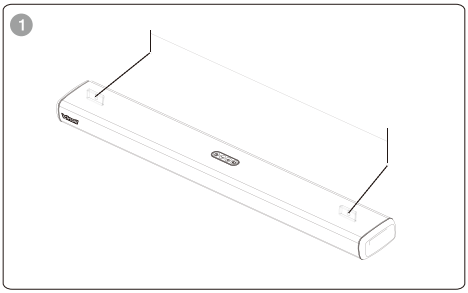

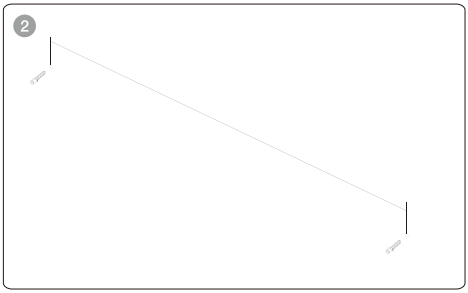

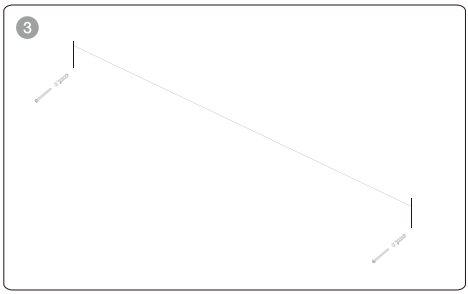

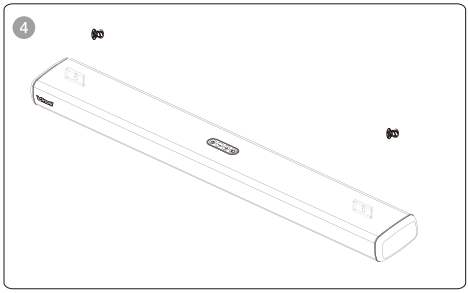

OPERATE INSTRUCTIONS

Setting the Soundbar

1: Plug in the power cord and the display will light up (Standby mode)

2: Switch on the soundbar by using power button on soundbar of by using STANDBY button on remote. After switching on, the default input mode will appear on display

3: Input mode can be changed by pressing the power button again or by using the INPUT button on remote

4:Below are input mode names appearing in the soundbar display:

Bt -Bluetooth Pairing mode, AU-AUX mode, OP-Optical mode, CO-Coaxial mode,

Powering On/Off

5. Plug the sound bar into a wall outlet, it will automatically enter standby mode

6. Short-press the multi-function button to turn on the sound bar

7. To turn off, press and hold the multi-function button for 2 seconds or unplug from wall outlet

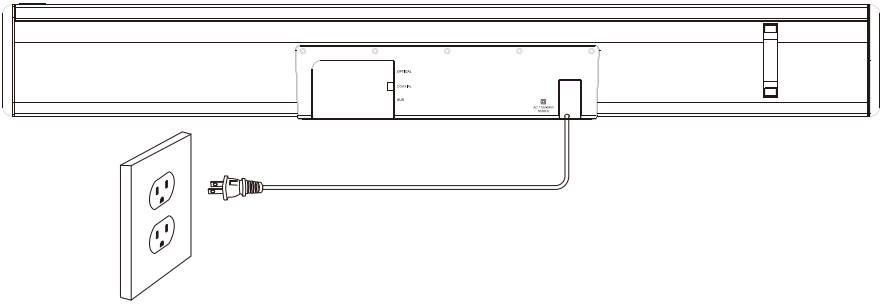

Playing Audio via BT Connection

1. Turn on sound bar and then short-press the multi-function button to switch to BT mode and the LED will show (bt)

2. Activate the pairing function on your phone of other compatible device and select “VLS-83 Vinoil”

3. When successfully paired, you will hear a tone and the LED indicator will stay on

4. The remote control includes BT mode playback controls

Notes:

• If your paired device is switched off or manually disconnected, the sound bar will automatically enter pairing mode

• If the connected device is switched off or manually disconnected, the sound bar will automatically enter pairing successfully connected device will be re-established once you re-enter wireless range(10 meters). to connect to other devices, repeat the above pairing steps

• There is no automatic shutdown in pairing mode. The sound bar will remain in pairing mode even if no device is paired, so switch off if not in use

Paying Audio via 3.5mm Audio input(Aux)Connection

- Connect the sound bar to your PC, tablet, smartphone, TV, of other device using the included 3.5mm audio cable short-press the multi-function button to switch to audio input mode with the LED indicator lit up (AU)
- In this mode, playback can only be controlled on your connected device

Note: For some computers, you may need to access the audio control panel to manually set the sound bar as below picture

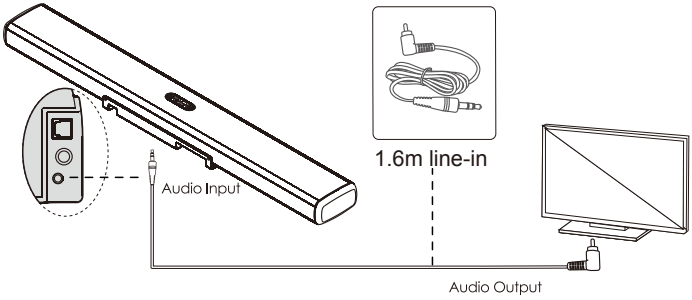

Optical Mode

Use this operating mode to play music from the optical digital input for example from a TV on your soundbar (A). The TV must have an optical digital output. Use the optical cable supplied to make the connection. Proceed as follows:

• Connect the optical cable to the optical digital output of your TV.

• Then connect the optical cable to the optical digital input of your soundbar.

• Switch the TV set and sound bar on. Set the connected TV to “PCM Stereo” or “Stereo 2.0”.
• Start playing on the TV.
• Press the “OPTICAL” button on the remote control to select this mode.
• You can use the volume buttons to adjust the volume to your requirements.
• If you wish, you can change the audio settings using the relevant buttons on the remote control.

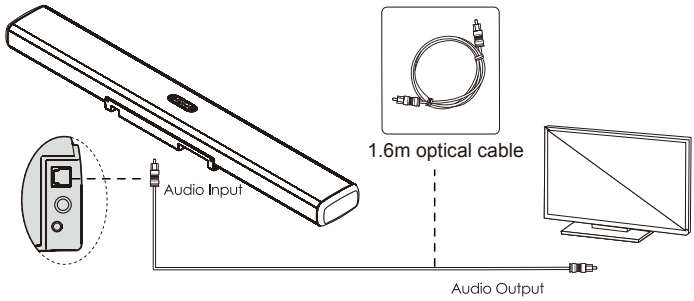

Coaxial mode

1. Connect the soundbar to your TV using coaxial cable, fully inserting the connectors so they click in.
2. Short-press the Input button on remote or Top cover of sound bar to switch to CO Mode.
3. In TV sound settings, select the soundbar optical connection (‘Audio Out / Coaxial’ ‘Audio System’ or similar) as the speaker (output for audio) instead of the TV Speakers
4. Set your TV audio format to PCM (digital audio out/ Coaxial) instead of DTS or others

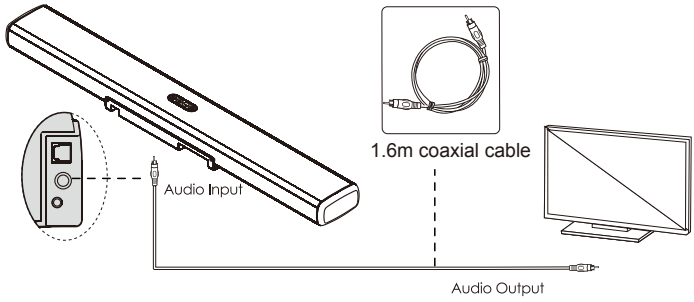

Specifications

Model	VLS-83
Technology	BT/OPT/COA/AUX
Drivers	1.75*2+2.75"*2
Audio Output Power	20W*2+40W=80W R.M.S.
Frequency Response	70Hz~20KHz
Signal-to-Noise Ratio	72dB
Impedance	4Ω*2+3Ω*2
Power Input	SMPS 110V-240V~50Hz/60Hz
Bluetooth Operating Range	Version: 4.2 Range:up to 10m
Dimensions	84.5H*108D*900L mm

Package Contents

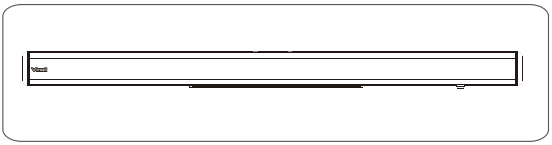

Sound bar X 1

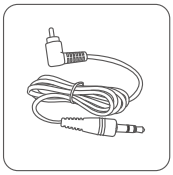

1.6m line-in

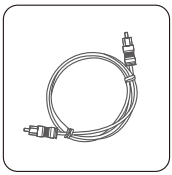

1.6m optical cable X 1

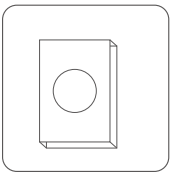

Wall Mount EVA Pads X 2

User Manual X 1

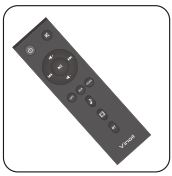

Remote Control X 1

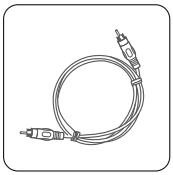

1.6m coaxial cable X 1

Mount Screws X 2

After Using the Soundbar System

set it to standby

Care and Cleaning

1. All care and cleaning operations should be carried out with the unit unplugged from the mainpower.
2. The surface of the unit can be cleaned with a slightly damp cloth and then dried carefully.
3. Never use abrasives, abrasive cloths or chemical solvents. Loudspeaker grilles can be cleaned carefully with a soft brush.

LIMITED WARRANTY

We take quality very seriously. The warranty terms do not apply to any product that has been subject to abuse, misuse, negligence or accident. Defects caused by tampering, unauthorized alterations or repairs are not covered by this warranty. If you have warranty or support issues, please contact our customer service, if you have questions about this product.

ABOUT THIS MANUAL

We strive to ensure that the information contained in this manual are as accurate as possible. Changes may be made to the manual or the product without prior notification.
Our company shall under no circumstances be held liable for injury or damage caused by errors or omissions in this manual.

RESPECT OF THE ENVIRONMENT

This product can't be disposed with household waste, it must be returned to a collection point to be recycled. Please check your local authorities for more details.

♦ Please note, Vinoil can only provide after sales service for products purchased directly from Vinoil. If you have purchased from a different seller, please contact them directly for service or warranty issues.

This device complies with part 15 of the FCC Rules. Operation is subject to the following two conditions: (1) This device may not cause harmful interference, and (2) this device must accept any interference received, including interference that may cause undesired operation.

Note: This equipment has been tested and found to comply with the limits for a Class B digital device, pursuant to part 15 of the FCC Rules. These limits are designed to provide reasonable protection against harmful interference in a residential installation. This equipment generates, uses and can radiate radio frequency energy and, if not installed and used in accordance with the instructions, may cause harmful interference to radio communications. However, there is no guarantee that interference will not occur in a particular installation. If this equipment does cause harmful interference to radio or television reception, which can be determined by turning the equipment off and on, the user is encouraged to try to correct the interference by one or more of the following measures:

—Reorient or relocate the receiving antenna.

—Increase the separation between the equipment and receiver.

—Connect the equipment into an outlet on a circuit different from that to which the receiver is connected.

—Consult the dealer or an experienced radio/TV technician for help.

Note: The Grantee is not responsible for any changes or modifications not expressly approved by the party responsible for compliance. such modifications could void the user's authority to operate the equipment.

The device has been evaluated to meet general RF exposure requirement.

To maintain compliance with FCC's RF exposure guidelines, the distance must be at least 20 cm between the radiator and your body, and fully supported by the operating and installation configurations of transmitter and its antenna(s).

Vinoil

Need support，please contact ct support@vinoilmusic.com

For warranty issues, contact ct

warranty@vinoilmusic.com wit with your order no