English

Bluetooth headset

NB-12

FCC ID:2ATW4NB-12

User Guide

1. Brief introduction

This product is a simple stylish business in-ear wireless earphone, with built-in CSR chipset; it brings you HD calls and music, and 12 hours battery life, makes your life simple and convenient.

It is attention-needed that the Bluetooth connection may be interrupted by wall partition or other electronic interference or distance excess. Please read over the instructions before using, to make sure to use it in right and safe way and keep it in good condition.

2. Instructions

(1）Key Function：

1. Earphone body
2. Volume key
3. Power switch
4. Telephone answer/end key
5. Rubber ear buds
6. Ear hook
7. Mic

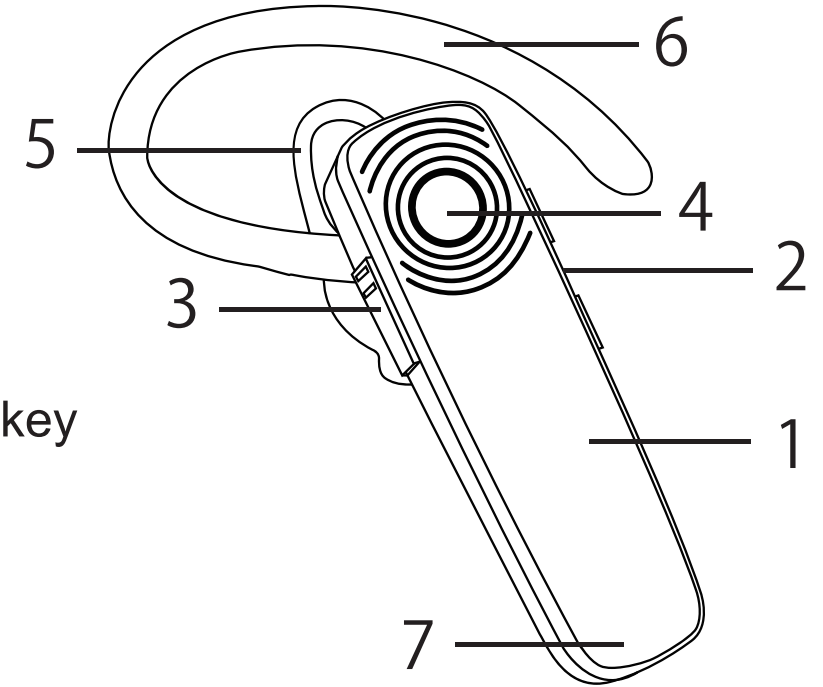

1）Power key

push up to turn on, push down to turn off

2）Volume key

Short press “volume +” key to turn volume up; Press and hold the “volume + “ key to skip to next track;

Short press “volume –“ key to turn volume down; Press and hold the “volume – “ key to skip to last track.

3）Telephone answer/end key

A. Single press to answer or end calls; long press to reject calls. While in the call, double press to hand call up.

B. While music playing, single press for music play or pause; Double click to redial the last number in address book. Long press to wake up Siri voice assistant.

3. Charge

1) The earphone is with a built-in lithium-ion polymer battery, needs about 3 hours for full charge at the first time.
2) The indicator turns long red while charging; turns blue while full of charge.
3） Please stop using it while charging.

4. Pairing

1) Turn on the earphone, LED indicator flashes blue and red alternately, enter pairing mode.
2) turn on the Bluetooth function in your device and search NB-12 in the searching list.
   iPhone: Setting > Bluetooth > Activate
   Android Phones: Setting > Bluetooth > Search new devices
   (Note: Different devices might have different setting of Bluetooth)
3) Connect NB-12

After paired successfully, Led indicator turns off.

4) Two-device connection:

A NB-12 can be connected with two smartphones. After connected with Phone A, turn NB-12 and the Bluetooth of Phone A off. Then re-start NB-12 and pair with Phone B; And then turn on the Bluetooth of Phone A again and select “NB-12” in the menu. (Although the earphone can connect with two phones, just can play music for one of phones.)

5. Instructions for use:

1) Power on / off: Push up to power on, push down to power off.
2) Answer/end a call: Short press the telephone answer/end key to answer call, double click to hang up.
3) Make/take a call:

When you make or take a call, the sound will be transmitted to

earphone automatically.

4) Reject a call:
   While call comes, press and hold the telephone answer/end key to reject call.
5) Volume control: press the volume key, click to volume up or down.
6) When battery low, you will hear the sound “dudu” and the indicator turns red. Please charge in time.

6. Specifications

1) Bluetooth version: V4.1
2) Support profile: Earphone, HFP, A2DP, AVRCP
3) Talking Time: About 12 hours
4) Standby Time: About 30 days
5) Charging Time: 2 hours
6) Music Play Time: 10 hours

7) Wireless Range: 10m
8) Previous song, next song.
9) Battery Status display both on iOS and Android devices.
10) Support Multi—point with 2 device.
11) Working Temperature: -10°C ~ 60°C

7. Common problem

1) Low battery will cause disconnection. Please charge it in time.
2) If the earphone turn on fails, please try charging it first and then try to turn on again.
3) If the battery runs out or the earphone out of use for a long time. That might be no indicator for some minutes while charging, but indicator will turn red after few minutes.
4) No sound in earphone.
   --Make sure the earphone has connected with phone successfully.

--Make sure the earphone is turned on.

--Make sure the earphone and the phone are within the effective distance.

5) Bluetooth earphone cannot be searched.

--Ensure that the earphone enters the status and ready to be searched.

--There might be a program error caused between phone and Bluetooth. Please restart the device and repair.

8. Points for attention

1) Using non-original accessories may cause low performance, body damage, short circuit and warranty failure.

2) Disassembling your earphone may damage the earphone and causing warranty failure.

3) Don’ t use your earphone in dusty environment.

4) Please use a clean, soft and dry cloth to clean your earphone.
5) Keeping place the earphone in the original package when not in use.
6) Don’ t let your children play with the earphone. They may hurt themselves or damage the earphone.
7) Don’ t place the earphone in hot or cold environments, otherwise the earphone may be temporarily unusable.

Happy?

Thank you for choosing our products! We sincerely hope it will be your new-found happiness.

If you are fully satisfied with your using experience, could you please kindly share to your friends?

We also engage with our fans to learn how we can do better by

offering free pre-release products. If you are interested, do not hesitate to follow us on

Facebook: **NewBeeBrand**

Website: **http://www.newbeeglobal.com/**

Not Happy?

If you are having any questions, concerns or just not satisfied with any regards, feel to contact us by e-mail at:

Email: **service@lianchuangchina.com**

Tel: **86-755-83219167**

Address: Room408, 4th Fl, Unit B, Bldg B. Min'sheng Industry, Gao'feng Rd , Long'hua District, Shenzhen City, Guangdong Province, China

FCC Warning Statement

Changes or modifications not expressly approved by the party responsible for compliance could void the user's authority to operate the equipment. This equipment has been tested and found to comply with the limits for a Class B digital device, pursuant to Part 15 of the FCC Rules. These limits are designed to provide reasonable protection against harmful interference in a residential installation. This equipment generates uses and can radiate radiofrequency energy and, if not installed and used in accordance with the instructions, may cause harmful interference to radio communications. However, there is no guarantee that interference will not occur in a particular installation. If this equipment does cause harmful interference to radio or television reception, which can be determined by turning the equipment off and on, the user is encouraged to try to correct the interference by one or more of the following measures:

- Reorient or relocate the receiving antenna.
- Increase the separation between the equipment and receiver.
- Connect the equipment into an outlet on a circuit different from that to which the receiver is connected.
- Consult the dealer or an experienced radio/TV technician for help.

This device complies with part 15 of the FCC Rules. Operation is subject to the following two conditions: (1) This device may not cause harmful interference, and (2) this device must accept any interference received, including interference that may cause undesired operation.