# PROGRAMMABLE UNIVERSAL TPMS SENSOR

Pro-Sensor 315MHz

## SAFETY INSTRUCTIONS

Before installing the sensor,you must read the installation and safety instructions carefully. For reasons of safety and for optimal operation,we recommend that any maintenance and repair work is carried out by trained experts only and according to the guidelines of the vehicle manufacturer.The valves are safety-relevant parts which are intended for the professional installation only.Failure to do so may result in the failure of the vehicle TPMS sensor to operate properly.We do not assume any liability in case of faulty or incorrect installation of the product.

**WARRANTY**

We guarantees that the sensor is free from material and manufacturing defects for a period of twenty-four(24) months or for 24,000 miles,whichever comes first.We will at its discretion replace any merchandise during the warranty period.The warranty shall be void if any of the following occur:

1.Improper installation of products
2.Improper usage
3.Induction of defect by other products
4.Mishandling of product
5.Incorrect application
6.Damage due to collision or tire failure
7.Racing or competition
8.Exceeding the specific limits of the product

## EXPLORED VIEW OF SENSOR

**CAUTION**

- The TPMS sensor assemblies are replacement or maintenance parts for vehicles that have a factory installed TPMS.
- Make sure to program the sensor by our sensor programming tools for your specific vehicle make,model and year before installation.
- Do not install programmed TPMS sensors in damaged wheels.
- In order to guarantee optimal function,the sensor may only be installed with original valves and accessories provided by us.
- Upon completion of installation,test the vehicle TPMS system using procedures described in the original manufacturer's user guide to confirm proper installation.

**EXPLORED VIEW OF SENSOR**

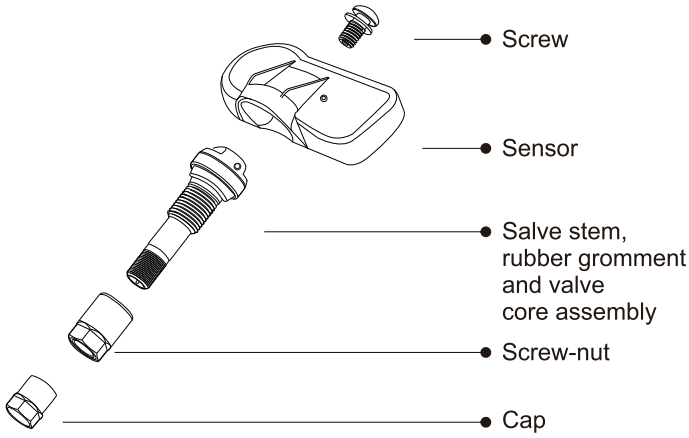


| Technical data of the sensor | |
|---|---|
| Battery life | ⩾5 years |
| Operating temperature | -40℃—+105℃ |
| Storage temperature | -40℃—+125℃ |
| Operating humidity | <90% |
| Frequency | 315MHz |
| Pressure monitoring range | 0—800kpa |
| Pressure accuracy | ±10kpa |
| Temperature accuracy | ±3℃ |
| Power Level | 8dBm |
| Battery voltage | 3.0V |
| Dimensions | approx. 79.3 mm * 59.1 mm x* 22.3 mm |
| Weight | 36.8g±0.5g |

**CAUTION:**

Each time a tire is serviced or dismounted,or if the sensor is removed or replaced,it is mandatory to replace the rubber grommet,washer,nut and valve core with our parts to ensure proper sealing.It is mandatory to replace the sensor if it is externally damaged.

Correct sensor nut torque:4 Newton-meters.

## INSTALLATION GUIDE

IMPORTANT:Before operating or maintaining this unit,please read these instructions carefully paying extra attention to the safety warnings and precautions.Use this unit correctly and with care.Failure to do so may cause damage and/or personal injury and will invalidate the warranty.

### 1 Loosening the tire

Remove the valve cap and core and deflate the tire.
Use the bead loosener to unseat the tire bead.

**⚠ CAUTION:**
The bead loosener must be facing the valve.

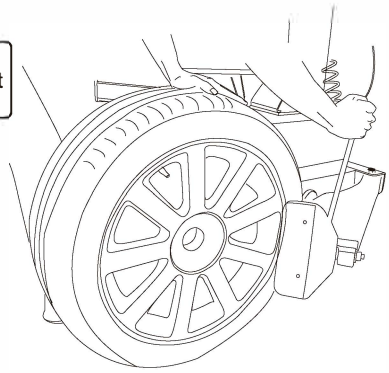

### 2 Dismounting the tire

Clamp the tire onto thetire changer,and adjust the valve at 1 o'clock relative to the tire separation head.
Insert the tire tool and lift the tire bead onto the mounting head to dismount the bead.

**⚠ CAUTION:**
This starting position must be observed during the whole dismounting process.

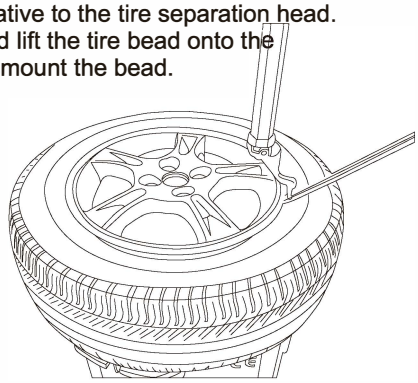

### 3 Dismounting

With a screwdriver remove the fastening screw and sensor from the valve stem.Then loosen the nut and remove the valve.

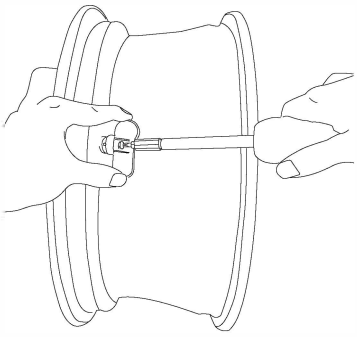

### 4 Mounting sensor and valve

Slide the valve stem through the valve hole of the rim.
Tighten the screw-nut with 4.0 Nm with the help of the positioning pin.Assemble the sensor and valve stem together by screw.Hold the sensor body against the rim and tighten the screw.

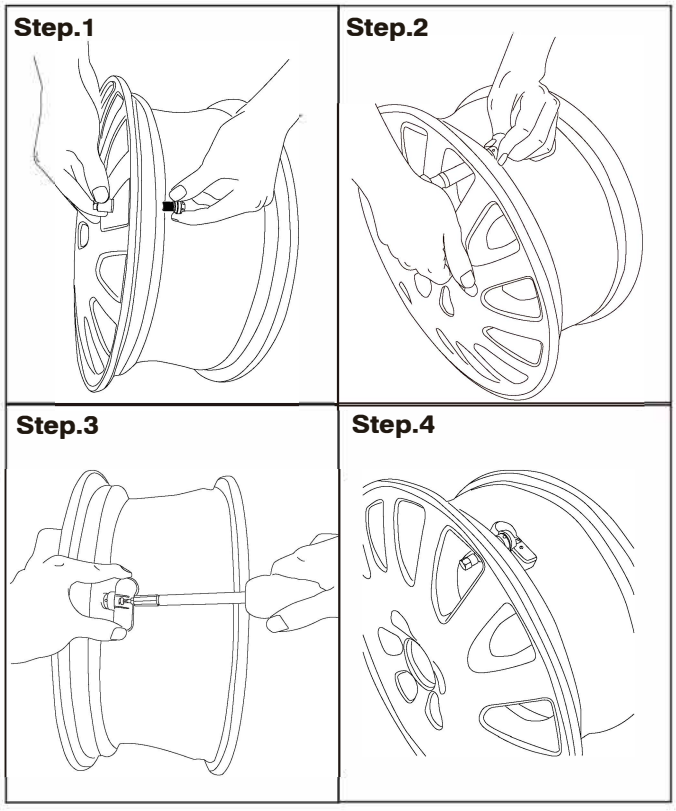


### 5 Mounting the tire

Place the tire on the rim,making sure that the valve faces the separation head at an angle of 180° .
Mount the tire over the rim.

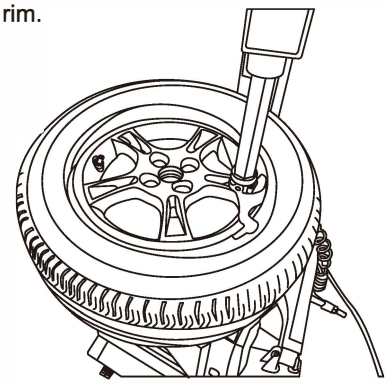

**FCC Requirement**

changes or modifications not expressly approved by the party responsible for compliance could void the user's authority to operate the equipment.

This device complies with Part 15 of the FCC Rules. Operation is subject to the following two conditions:

(1) this device may not cause harmful interference, and

(2) this device must accept any interference received, including interference that may cause undesired operation.

Note: This equipment has been tested and found to comply with the limits for a Class B digital device, pursuant to Part 15 of the FCC Rules. These limits are designed to provide reasonable protection against harmful interference in a residential installation. This equipment generates, uses, and can radiate radio frequency energy, and if not installed and used in accordance with the instructions, may cause harmful interference to radio communications. However, there is no guarantee that interference will not occur in a particular installation. If this equipment does cause harmful interference to radio or television reception, which can be determined by turning the equipment off and on, the user is encouraged to try to correct the interference by one or more of the following measures:

– Reorient or relocate the receiving antenna.

– Increase the separation between the equipment and receiver.

– Connect the equipment into an outlet on a circuit different from that to which the receiver is connected.

– Consult the dealer or an experienced radio/TV technician for help.

This equipment complies with FCC radiation exposure limits set forth for an uncontrolled environment. This equipment should be installed and operated with a minimum distance of 20cm between the radiator & your body. This transmitter must not be co-located or operating in conjunction with any other antenna or transmitter.

Manufacturer information:

Zhejiang PDW Industrial Co., Ltd.

Quanxi Industrial Park, Wuyi County, Jinhua City, Zhejiang, P.R.China 321200

Importer information:

City Pro car d.o.o.

Surcinska 5b, Belgrade, Serbia