Introduction

Thank you very much for purchasing the “LAUREL Currency Sorter X8”.

This User Manual describes safety instructions, operations, functions, specifications etc.
Please read carefully and understand this manual before operating the machine.
Keep this User Manual ready for your reference.

This Manual is printed with SOY INK.

Recycled Paper used.

Contents

Safety Precaution ····· 1

1. OVERALL DESCRIPTIONS ····· 7

1-1. Names and Functions of Parts ····· 7
1-2. Names and Functions of Keys ····· 9

2. Remarks on notes to be counted ····· 10

3. Basic Operation ····· 11

4. MODES ····· 13

4-1. How to change Sorting Mode ····· 13
4-2. Sorting Pattern ····· 15

5. ERRORS AND REMEDIAL MEASURES ····· 16

5-1. In case the Feeding is not good ····· 16
5-2. In case of jamming ····· 16
5-3. Error Code ····· 18

6. DAILY CARE ····· 19

6-1. Sensor Location ····· 19
6-2. Cleaning of the Sensors ····· 20

7. ACCESSORIES & OPTIONS ····· 21

7-1. Accessories ····· 21
7-2. Options ····· 21

8. SPECIFICATIONS ····· 21

Safety Precaution

Request from us

*If you don't use the machine for a long time, make sure to turn off the power switch.
*About the installation of the machine

Avoid high temperature, high humidity, dust, vibration, and direct sunlight.
In case the environment of operation exceeds room temperature [5C to 35C] and humidity [45% to 80%], the performance of the machine will deteriorate remarkably.
Please use an air-conditioner, a humidifier, etc. in case of above conditions.

*When turning on and off the power switch, make time interval of 5 seconds or more.
*Treat the machine with care.
Do not strike or shake the machine.
Close all covers before starting the operation.
Press the keys or switches softly for the operation

Before Operation

Please read the following explanations for each safety mark before operating the machine.

Description of Warning, Caution and Examples

Warning	In case the machine is wrongly operated without respect to this mark, there is a possibility of fatal or serious injury to the operator.
Caution	In case the machine is wrongly operated without respect to this mark, there is a possibility of an injury or material physical damage to the machine.

Description of Marks and Examples

The assumed incidents and contents are described below.

Caution of pinching.	This mark warns the operator to be cautious not to pinch a finger etc. In case of handling without care, there is risk of an injury.	Don't dismount.	This mark warns the operator not to disassemble the machine. There is risk of danger.
Caution of fire	This mark warns possibility of a fire and smoke.	Caution of heat	This mark warns possibility of an injury due to the heat.
Caution of electric shock	This markl warns possiblity of an electric shock.	Caution of explosion	This symbol warns possiblity of an explosion.

△ The mark warns operators to be cautious. Please refer to the explanation beside the mark.
⊘ The mark warns prohibited actions. Please refer to the explanation beside the mark.

Discription of Marks and Examples

The following marks also indicate description of safe use of the machine.

	This mark indicates an action must be carried out.		This mark indicates prohibition.
	This mark requires proper grounding.		This mark requires that the power plug be pulled out before taking necessary action.

- ⊘ The mark warns prohibited actions.
- ● The mark requires an action must be carried out. Refer to the explanation beside the mark.

About instantaneous voltage drop

This machine may have a problem due to instantaneous voltage drop by thunderbolt etc.
We recommend employing UPS etc for countermeasure.

About maintenance service

This machine requires proper maintenance service. Please contact you local distributor of LAUREL for further details about the maintenance service.

About Transfer (selling) and disposal of the machine

When this machine is transferred [or sold] to a third party, it is necessary to fulfill the following requirements. Transfer all things attached to the machine including this user manual and do not hold any duplicates.

Remarks on safety / cautions

Warning

Pull out plug

If either smoke, abnormal smell or noise is detected from the machine, stop the operation and pull out the plugs from the outlet. Then contact your local distributor of LAUREL. Without respect to this caution, there is a risk of failure, an electric shock or a fire.

Pull out plug

If liquid is spilled over the machine or metal, burnable material is dropped inside the machine, do not use the machine.
Pull out the plug from the outlet and contact your local distributor of LAUREL. Otherwise, there is a risk of an electric shock or a fire.

Electric Shock

If a thunder sounds, do not touch the machine, any power cables or interface cables. And do not carry out attachment / removal of peripheral equipment.
There is a risk of an electric shock.

The machine may fall down in case of earthquakes.
In case of earthquakes, please keep away from the machine.

Caution

Risk of Injury

Keep your fingers, hairs and clothes (especially ties) away from the hopper area. Otherwise, there is a risk of an injury.

Risk of Injury

Make sure the machine stops completely before opening the covers of the machine. Otherwise, there is a risk of an injury.

Risk of Injury

Hold the specified part when opening and closing the covers and make sure not to pinch your finger. Otherwise, there is a risk of an injury.

Don’t disassemble

Do not disassemble the machine except having been instructed in the user manual. There is a risk of an electric shock and a fire.

Risk of electric shock

Do not touch the machine or the power cable with a wet hand.
There is a risk of an electric shock.

Caution

Risk of fire

Do not connect many plugs to one outlet.
Adapter connecting outlet may heat up and there is a risk of a fire.

Make sure to connect earth wire to the proper grounding.
Otherwise, there is a risk of an electric shock.

Risk of explosion

Do not connect earth wire to gas pipe.
There is a risk of an explosion.

Risk of fire

Do not install the machine at a humid area, dusty or any place for handling water. There is a risk of an electric shock and fire.

Risk of electric shock

Do not use the machine by other than the specified power [AC90 to 252V].
There is a risk of an electric shock and a fire.

Risk of injury

Do not lean over, sit, step on or place heavy material on the machine.
Otherwise, there is a risk of an injury because the machine might fall down.

Do not remove warning mark that describes caution for safety.

Do not place the machine in an area where there is strong electromagnetic wave caused by wireless applications, monitors and speakers.
There is a possibility of malfunction.
Switch off mobile phones near the machine.

Risk of injury

Be cautious when Auto Start function is activated.
The machine will start automatically by covering the hopper sensor.
There is a risk of an injury.

Do not replace fuse. There is a risk of an electric shock or a fire.
When the machine breaks down, please contact your local distributor of LAUREL.

	Caution
	Make sure to stop the machine completely when the power switch is turned off. If the power switch is turned off while in operation, it may cause failure of the machine.
	Do not apply a sharp edge of rigid material to the display screen. There is a risk of damage of the display.

Precaution for the power cable

	Caution
	The power cable enclosed in the box is exclusive for the machine. Use the cable for the machine. Otherwise, there is risk of failure, electric shock or fire.
	Do not use the power cable which is not for the machine. There is risk of failure, electric shock or fire.
	Do not use damaged, exothermic, altered power cable and plug covered in dust. There is risk of burning, electric shock or fire. Contact a regional distributor of LAUREL about the replacement of the power cable.
	Do not place heavy material on the power cable or other interface cables. Also do not twist or pull out the cables. There is risk of failure, electric shock or fire.
Pull out Plug	When pulling out the plug, be sure to hold the plug itself. If the plug is pulled out by holding the cable, it may cause physical failure, electric shock or fire.
Pull out Plug	If the machine is no in use for a long time, pull out the plug from the outlet for safety.

Caution for Cleaning

	Caution
	When cleaning the machine, please turn off the power switch and remove the plug from the outlet. Otherwise, there is a risk of an injury due to sudden motion.
	When cleaning the machine, use dry cloth or cloth moistened with water or neutral detergent. Do not pour the water or natural detergent directly onto the machine. It may cause failure and damage.
	Do not use volatile organic solvent such as thinner, wipe or aphicide for cleaning. It may cause changing of color or failure of the machine.
	Do not use air spray which contains flammable gas for cleaning. It may cause failure or a fire.
	When cleaning the machine, do not hold the machine strongly. There is a risk of damage.

About disposal of a Machine

	The machine contains a component that is able to discriminate banknotes. Therefore, there is a possibility of being used for a criminal act if passed onto a third party. If the machine is discarded, contact your local distributor of LAUREL for the proper disposal.

1. OVERALL DESCRIPTIONS

1-1. Names and Functions of Parts

Front View

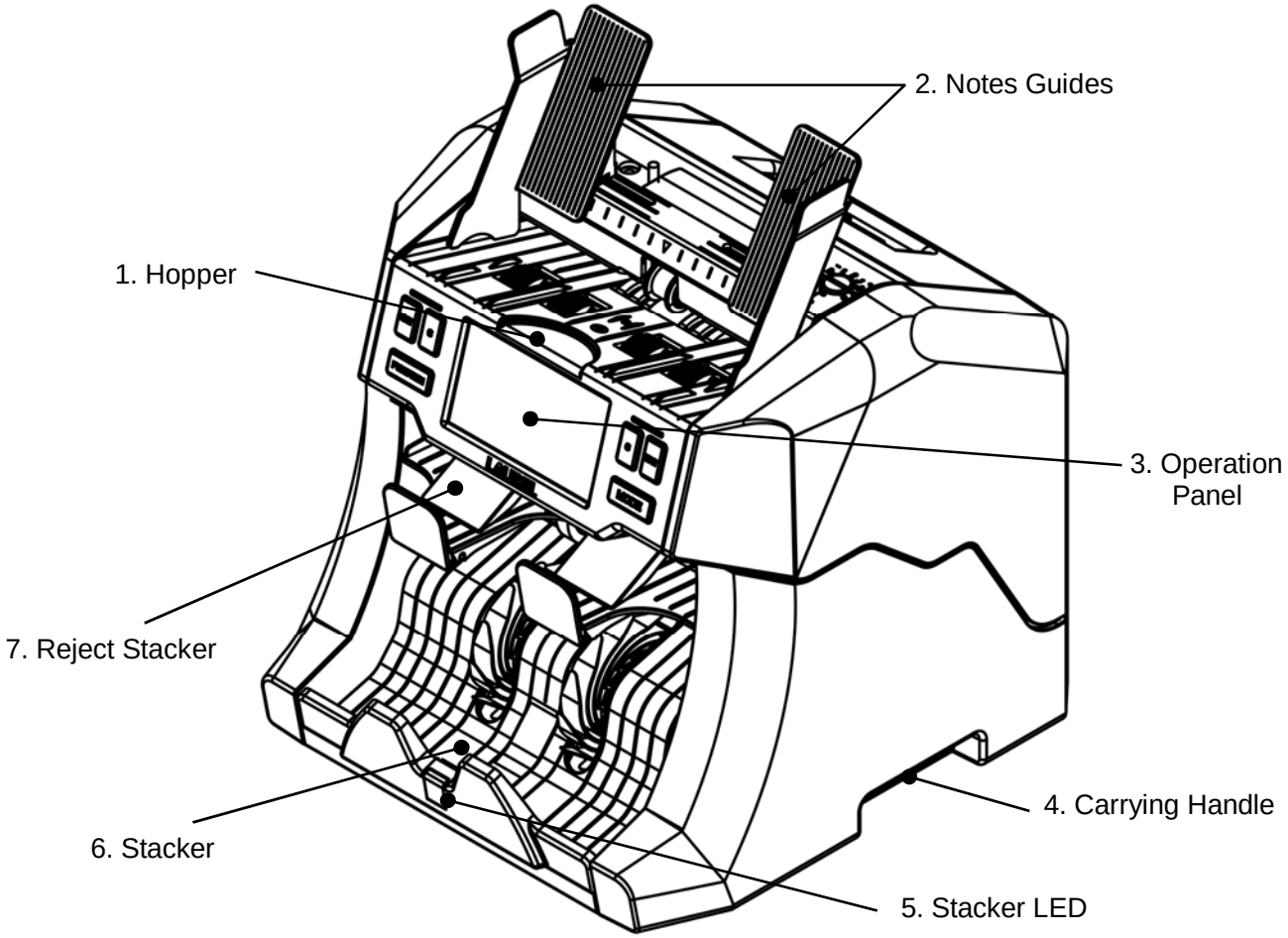

1. Hopper
   Notes to be counted are put onto the Hopper.

2. Note Guides
   Notes can be centered using the Note Guides.

3. Operation Panel
   The display indicates count result at Main-Display and there are various operation keys.

4. Carrying Handle
   It is used for carrying the machine.

5. Stacker LED
   LED indicates count result of notes and machine condition by color.

6. Stacker
   Counted notes are stacked in this Stacker.

7. Reject Stacker
   Reject notes and suspicious notes are stacked in this Stacker.

Rear View

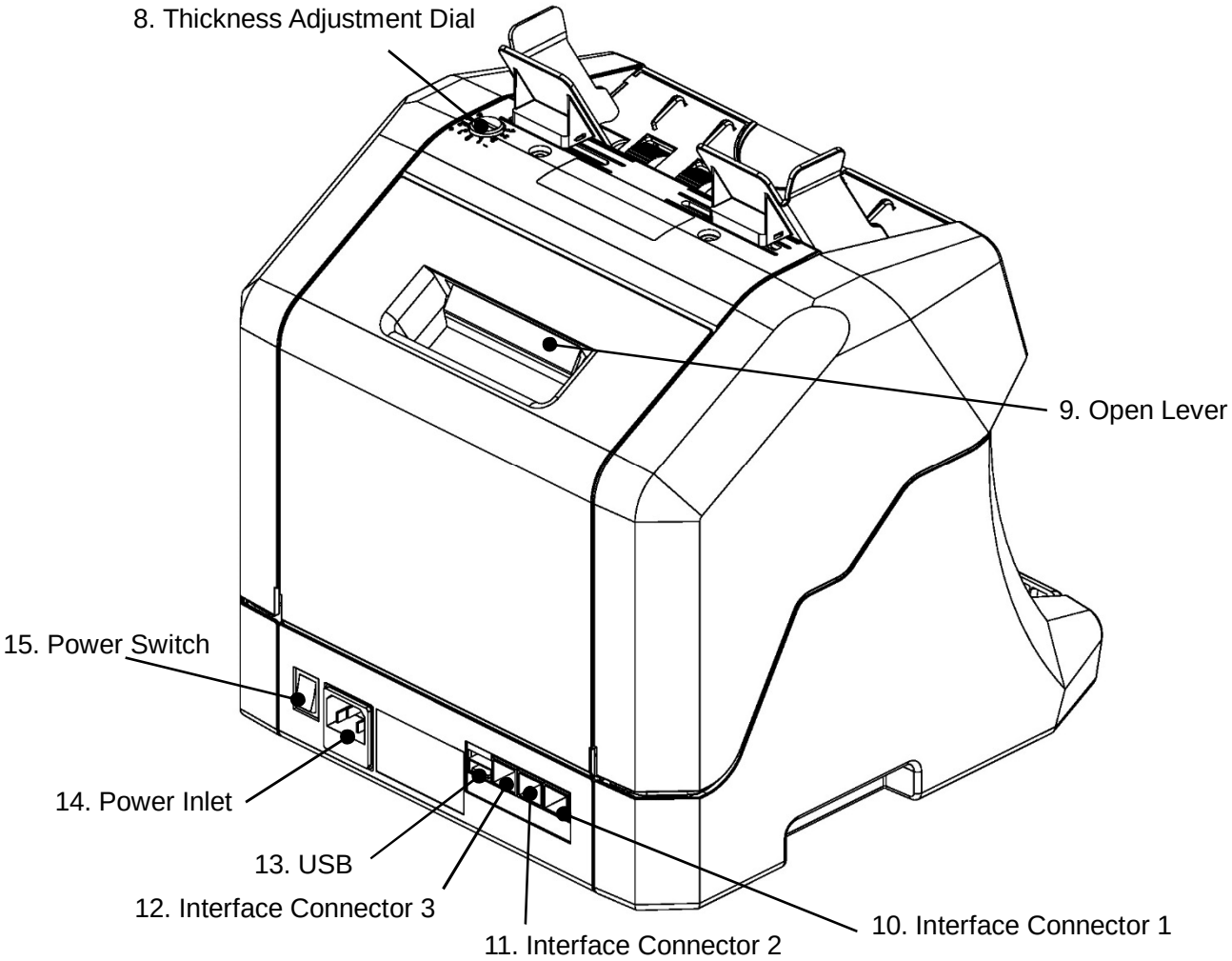

8. Thickness Adjustment Dial
   The Dial is to adjust feeding condition. Use a coin to turn the Dial.

9. Open Lever
   It is used for opening the Rear Cover.

10. Interface Connector 1: For Service maintenance
11. Interface Connector 2: For Printer or PC Connection
12. Interface Connector 3: For Customer Display
13. USB Connection

14. Power Inlet
   It is used for connecting the Power Cable.

15. Power Switch
   It is used for turning on and off the Power.

1-2. Names and Functions of Keys

C	Press to recount and clear Errors In case of connection to Printer press to complete count without printing
ENT	Press to complete count and to fix various settings Press to print count result in case of connection to a Printer
MODE	Press to select Modes
FUNCTION	Press to change various settings

2. Remarks on notes to be counted

The following kinds of notes should be flattened before counting.

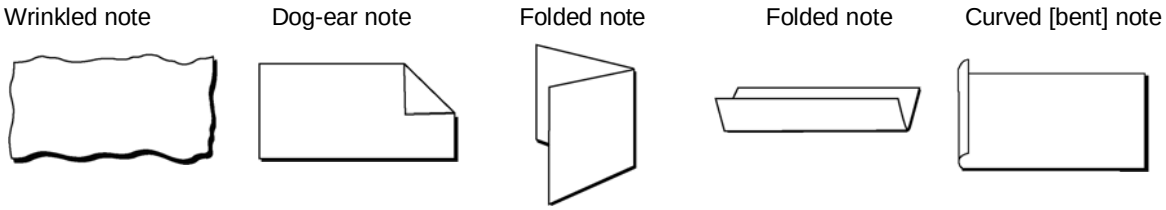

Notes should be thumbed and be arranged.
Especially brick notes are surely required to be thumbed and arranged.

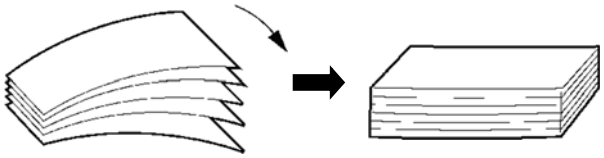

Do not count the following notes, which may cause jamming or count problems.

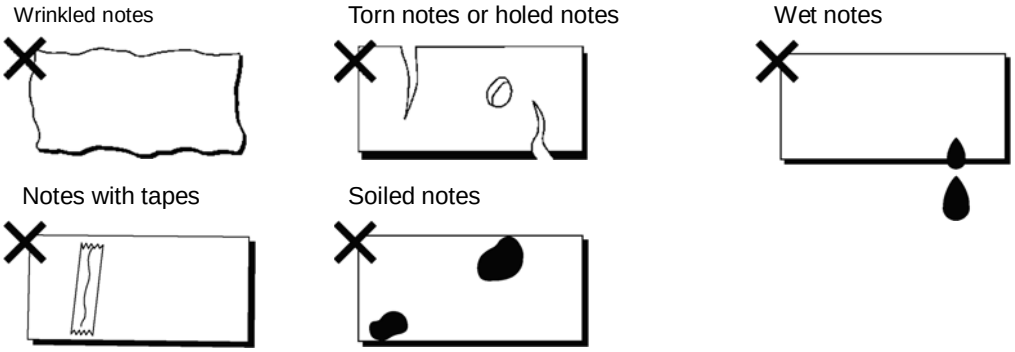

Before counting, remove foreign objects [clips or rubbers]
They will cause jamming or count problems.

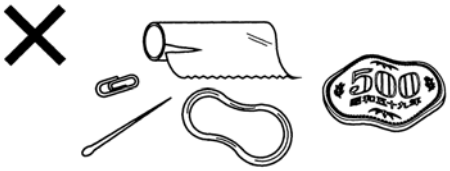

Be careful in the arrangement of notes to be counted in case the FACE and the ORIENTATION function is ON. Count stops will become frequent if not putting notes properly. For details please refer to FACE/ORIENTATION setting

3. Basic Operation

Step 1.

Turn on the Power Switch.

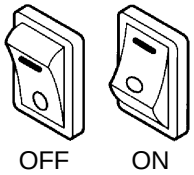

Step 2.

Select a sorting Mode.

Step 3.

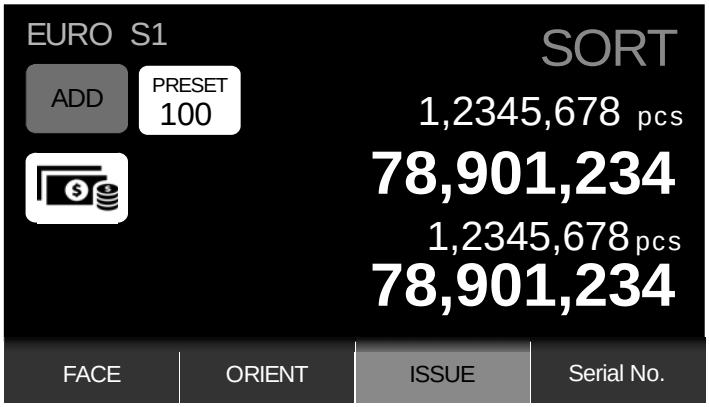

Select a sorting pattern. (FACE, OREENT, ISSUE)

Set various functions if necessary.

Set ADD mode

Set Preset number.

Step 4.

Set Note Guides to the notes to be counted.

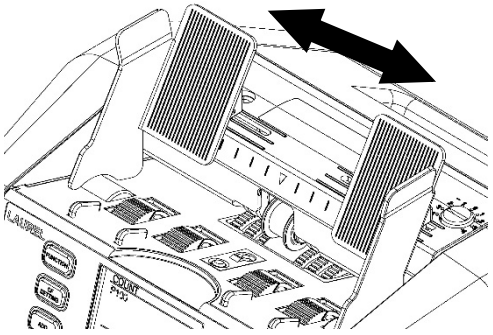

Step 5.

Put the notes onto the Hopper, counting starts automatically after placing notes onto the Hopper.

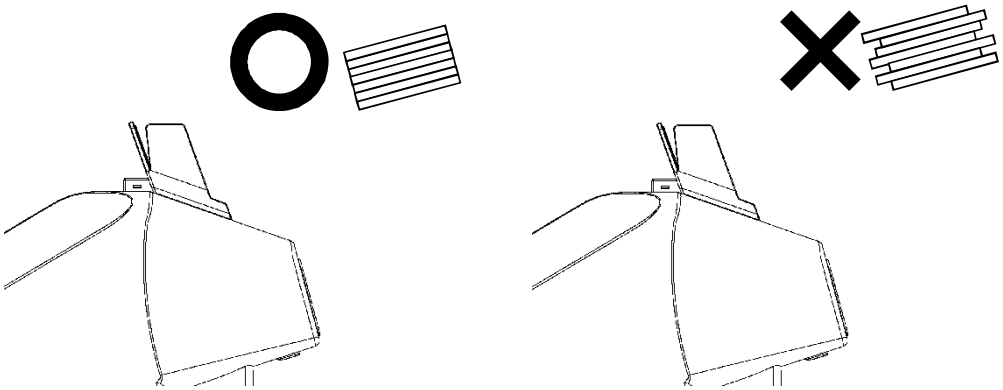

In setting notes onto the Hopper, arrange notes to the longer side of a note and set them properly in the above good example. Otherwise, it will cause a feeding Error

Step 6.

When Suspicious notes are found, LED in the Lower Stacker turns into red.

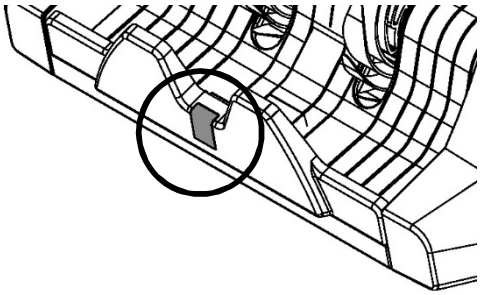

Step 7.

Press ENT to complete transaction.

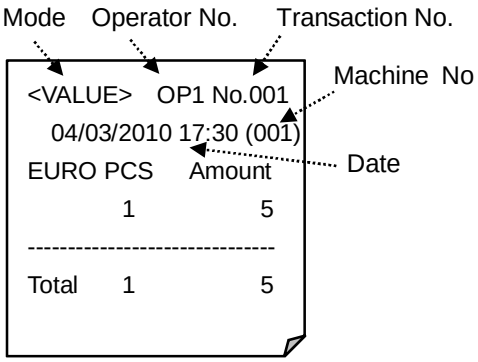

Print last counted data when connected with a printer.

In ADD Mode with connect Printer:
ADD Total can print when press ENT around 2 second and clear data. Next count starts from 0.

4. MODES

4-1. How to change Sorting Mode

Press Mode key to change sorting mode every press of the key switches from COUNT – VALUE – SORT.

4-1-2. COUNT Mode

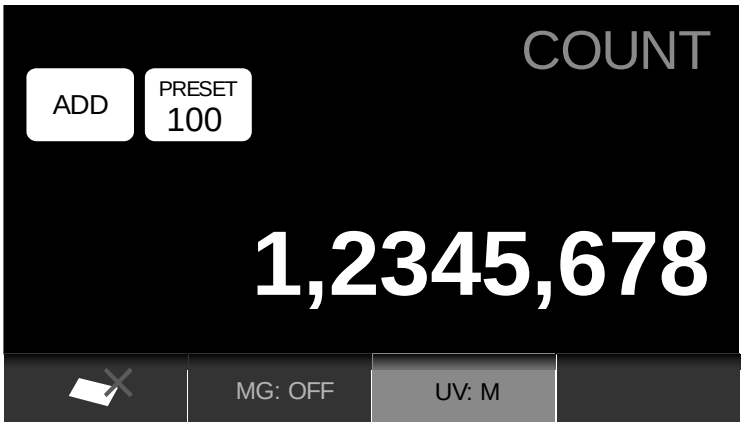

The count result is shown in quantity (pieces).
In Count Mode F Keys enable the following function settings active.

F1: SC Function <Size Check Function>

Detect size different notes

SC: ↕↔ Size Check ON
SC: x Size Check OFF
SC: ↕ Detect a different note in a shorter side of a note
SC: ↔ Detect a different note in a longer side of a note

F2: MG Detection

MG:OFF Detection OFF
MG:L Levels setting
MG:M H is the severest detection level.
MG:H

F3: UV Detection

UV:OFF Detection OFF
UV:L
UV:M Levels setting
UV:H H is the severest detection level.

4-1-3. VALUE Mode

The count result can be shown in pcs and value.
Available currency can be selected in Currency setting in FUNCTION.

4-1-4. SORT Mode

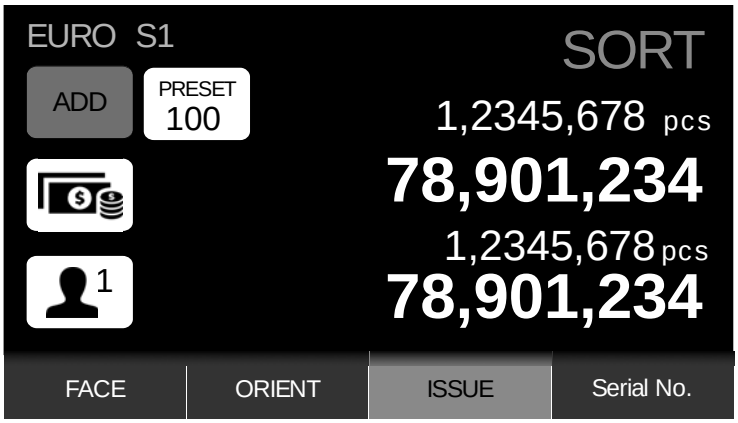

The first note denomination can be sorted in the SORT Mode.

4-1-5. ADD Mode

This function enables an accumulated count result.

4-2. Sorting Pattern

In Value, Sort Mode press F1 to F3 and Face, Orient, Issue sortings can be done
In this function in Upper Stacker and Lower Stacker the following notes are to be stacked: -

F1: FACE Sorting

Upper Stacker:

The first note is face-up/down (A, B direction)

Lower Stacker:

Reverse notes in direction (C,D direction)
Different denomination notes
Unreadable notes
Suspicious Notes

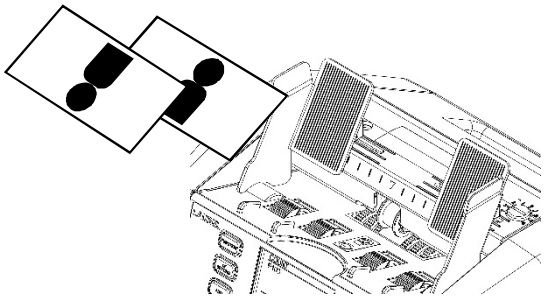

F2: ORIENT (ORIENTATION) Sorting

Upper Stacker:

First counted denomination A direction

Lower Stacker:

Counted denomination B,C,D directions
Different denomination
Unreadable notes
Suspicious notes

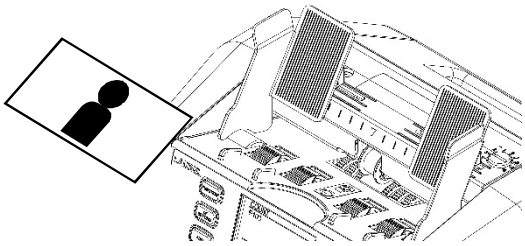

F3: ISSUE Sorting

Upper Stacker:

First counted issue note

Lower Stacker:

Counted different issue notes
Different denomination notes
Unreadable notes
Suspicious notes

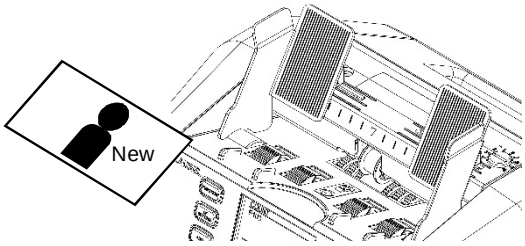

When there is not old and new issue, issue sorting function is not effective.

The directions of a note are shown below: -

Face-up	Face-down	Unface-up	Unface-down
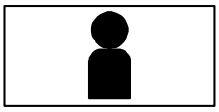	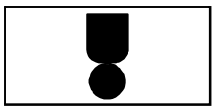	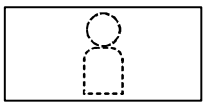	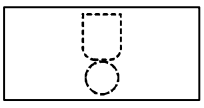
A direction	**B direction**	**C direction**	**D direction**

5. ERRORS AND REMEDIAL MEASURES

5-1. In case the Feeding is not good

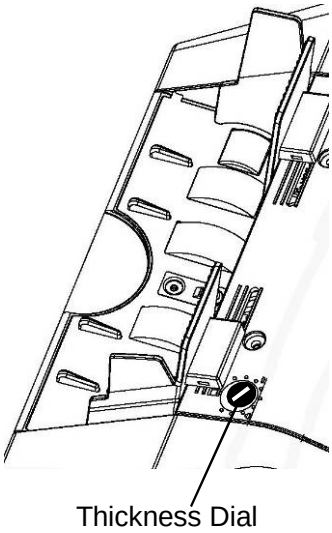

In case the feeding is not good, the gap of the Intake Slot can be adjusted.

Step-1 Insert a coin (or a minus driver) to the Thickness Dial.
Step-2 Turn the Thickness Dial to adjust the gap.

5-2. In case of jamming

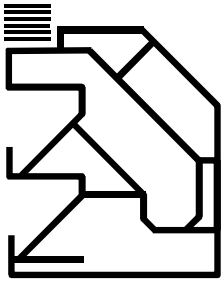

In case of jamming, following the guidance in the Display, check the inside of the machine.

The covers can be open in order to clean inside or take out jammed notes.

5-2-1 Feeding Ass'y

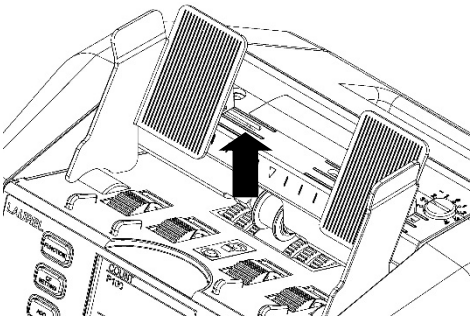

Hold and lift the Machine in the direction of the arrow in the drawing and Feeding Ass'y can be opened.

5-2-2 Upper Cover

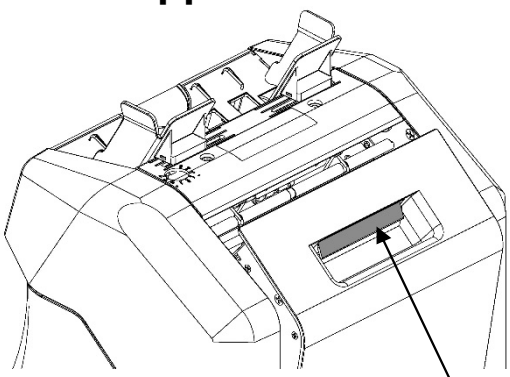

Open Lever

Hold and lift the Open Lever to open the Rear Cover.

5-2-4 Upper Unit

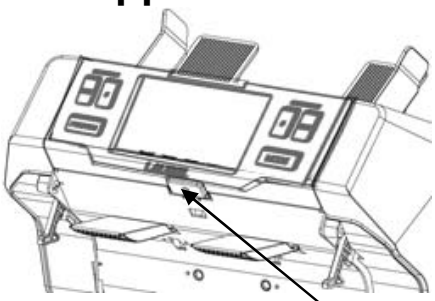

Open Button

How to Open the Upper Unit

Pressing Open Button and lift it to open the Upper Unit.

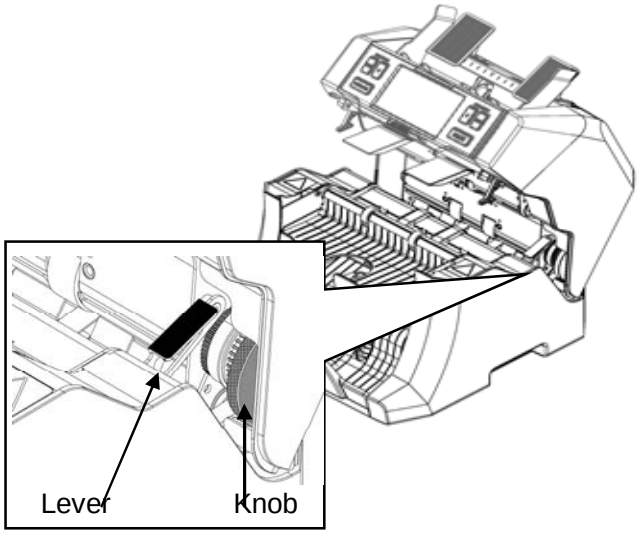

How to Close the Upper Unit

1. Lift the Upper Unit a little by left hand.
2. Pull the Lever forward.
3. Fall down the Upper Unit slowly.

Be careful not to pinch your finger when you close the Upper Unit

In case of jamming, turn the Knob to take out the jammed note(s) easily.

5-2-5 Guide A

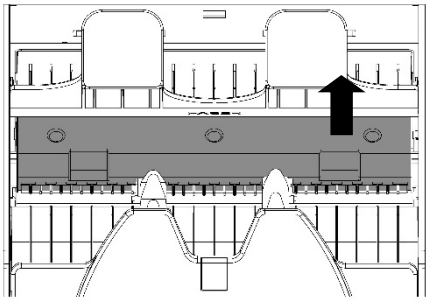

Lift the Guide A to remove jammed notes.

5-3. Error Code

Sensor Location: Please refer to “6-1. Sensor Location”.

Code	Condition	Cause of problem	Remedial Measures
00- 01	Upper Unit Open	Upper unit is opened.	Close the cover.
00- 02	Rear Cover Open	Rear Cover is opened.	
10- 02	CSR Sensor Error	1. Upper Cover is opened. 2. Remaining note or foreign matter. 3. Sensor is dirty.	1. Close the cover. 2. Remove jammed notes or foreign matter. 3. Clean the sensor.
10- 03	CSL Sensor Error		
10- 04	USR Sensor Error	1. Remaining note or foreign matter. 2. Sensor is dirty.	1. Remove jammed notes or foreign matter. 2. Clean the sensor.
10- 05	USL Sensor Error		
10- 06	DSR Sensor Error		
10- 07	DSL Sensor Error		
10- 08	UPR Sensor Error		
10- 09	UPL Sensor Error		
10- 10	LPR Sensor Error		
10- 11	LPL Sensor Error		
10- 12	USS Sensor Error		
10- 13	LSS Sensor Error		
30- 01	CS Sensor JAM		
30- 02	US Sensor JAM		
30- 03	DS Sensor JAM		
30- 04	UP Sensor JAM		
30- 05	LP Sensor JAM	1. Feeding Failure 2. Sensor is dirty.	1. Remove notes from Hopper and count again. 2. Hopper Sensor is dirty.
90- 01	Hopper Feeding Error	Feeding Failure	Check the Jammed note or dirt on the Hopper Sensor
90- 02	Counting Error	Counting Error	Recount all notes.
90- 03	Sorting Error		
90- 04			
D0- 01	Feed Motor Error	Remaining note or foreign matter.	Remove jammed notes or foreign matter.
D0- 02	Main Motor Error		

6. DAILY CARE

6-1. Sensor Location

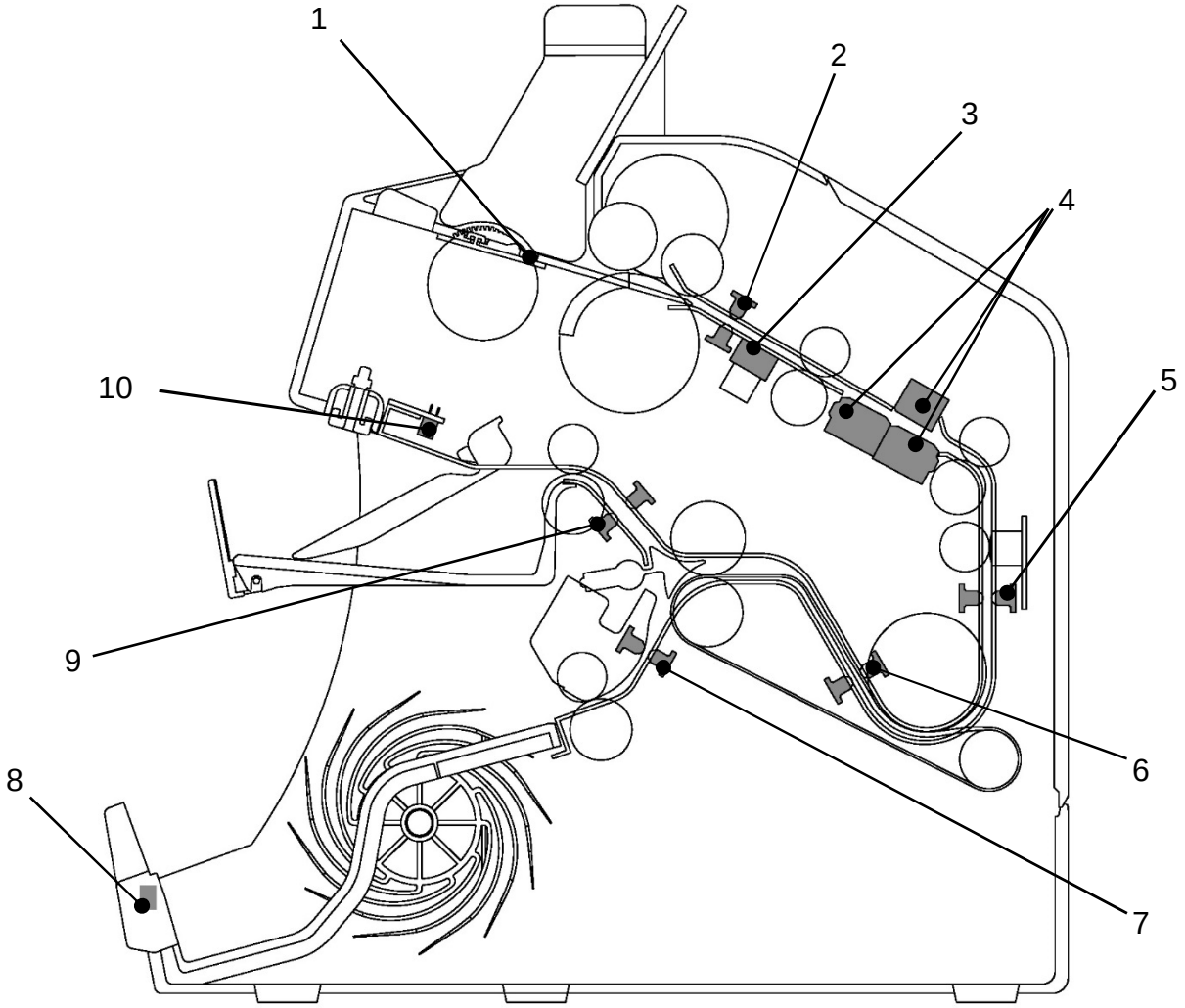

No	Description
1.	HS Sensor
2.	CSL / CSR Sensor
3.	UV Sensor
4.	Image Sensors
5.	USL / USR Sensor
6.	DSL / DSR Sensor
7.	LPL / LPR Sensor
8.	Stacker Sensor
9.	UPL / UPR Sensor
10.	Reject Stacker Sensor

6-2. Cleaning of the Sensors

Clean the following Sensors with a brush and cloth once a day.

Stacker Sensors and Hopper Sensor

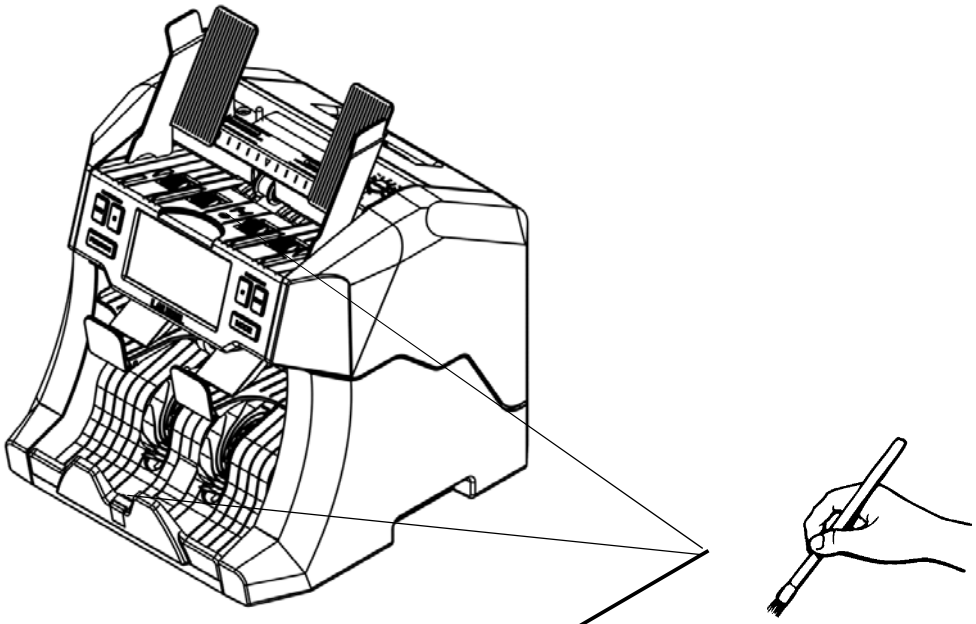

Count Sensors

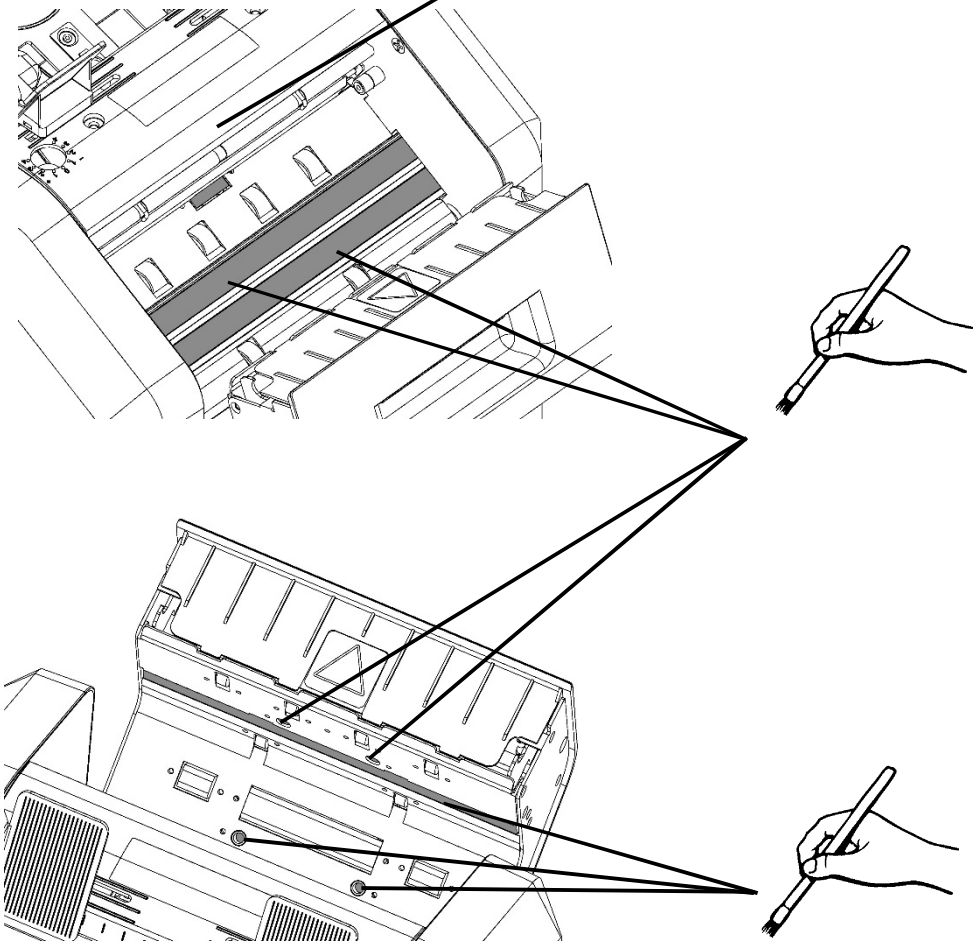

7. ACCESSORIES & OPTIONS

7-1. Accessories

1. Power Cable ····· 1
2. Instruction Manual ····· 1
3. Cleaning Cloth ····· 1
4. Note Guide ····· 2

7-2. Options

For details of options, please contact your local distributor.

1. External Display
2. Serial Printer

8. SPECIFICATIONS

1.	Counting Speed	Max. 1150 notes/min.
2.	Hopper Capacity	Max. 700 notes
3.	Stacker Capacity	Max. 250 notes
4.	Power Supply	100 - 240 V ~ 50 / 60 Hz
5.	Power Consumption	at Counting 70 W at Rest 15 W
6.	Dimensions	280 × 290 × 310 mm (H × W × D)
7.	Weight	Approx. 12.5 kg

NOTE: This equipment has been tested and found to comply with the limits for a Class A digital device, pursuant to part 15 of the FCC Rules. These limits are designed to provide reasonable protection against harmful interference when the equipment is operated in a commercial environment. This equipment generates, uses, and can radiate radio frequency energy and, if not installed and used in accordance with the instruction manual, may cause harmful interference to radio communications. Operation of this equipment in a residential area is likely to cause harmful interference in which case the user will be required to correct the interference at his own expense.

The users manual or instruction manual for an intentional or unintentional radiator shall caution the user that changes or modifications not expressly approved by the party responsible for compliance could void the user's authority to operate the equipment. In cases where the manual is provided only in a form other than paper, such as on a computer disk or over the Internet, the information required by this section may be included in the manual in that alternative form, provided the user can reasonably be expected to have the capability to access information in that form.

LAUREL Currency Sorter
X8 Series
User Manual

March 2015 1st edition

・The contents of this user manual may change without prior notice.

・It is strictly prohibited to use a part or a whole manual to another publication without permission of the publisher.