东莞市一佳电子通讯科技有限公司

Dongguan YiJia Electronics Communication Technology Co.,Ltd.

规 格 承 认 书

SPECIFICATION FOR APPROVAL

日 期 Date	2022/10/24
编 号 File No	22102402
版 本 Revision	1.0

客 户 CUSTOMER: 海信

客户料号 CUSTOMER NO: HK578

品 名 PART NAME: WIFI AUX Antenna L=320mm MHF

供方料号 SUPPLIER NO: YJQ01.220.004.302A

送样日期Date: 送样数量Q“TY:

客户确认CUSTOMER APPROVED BY		
APPROVAL	CHIEF	SUPERVISOR

供方确认 SUPPLIER SIGNATURE		
APPROVAL	CHECK	DESIGN
ChenGuoqiang	XieLi	ChenXingyi

YJ-RD-F04-A

add：东莞市长安镇沙头社区木鱼路59号元富工业区 Tel:0769-82586086 Fax:0769-82586086

承认书项目表

NO.	内 容（Contents）	页 数（Number of Page）	页 码（Page Code）
1	承认书封面（Spec Cover）	1	1
2	承认书项目表（Spec Item ）	1	2
3	工程成品图 （Drawing）	1	3
4	天线规格（Antenna Specification）	1	4
5	S参数测试 （S Parameter ）	1	5
6	无源测试 （Passive Test ）	2	6 ~ 7
7	方向图（Radiation Pattern ）	2	8 ~ 9
8	有源测试 （Active Test ）	1	10
9	天线装配图（Antenna Profile）	2	11~ 12
10	材质证明（ Material Certificate ）	29	13 ~ 41
11	RoHS报告（ RoHS Test Report ）	**	**
12	N/A	N/A	N/A
13	-	-	-

add：东莞市长安镇沙头社区木鱼路59号元富工业区 Tel:0769-82586086 Fax:0769-82586086

RoHS Compatible

CUSTOMER	
PART NO	

REV.	DESCRIPTION	DATE
A	首次发行	2022-09-28

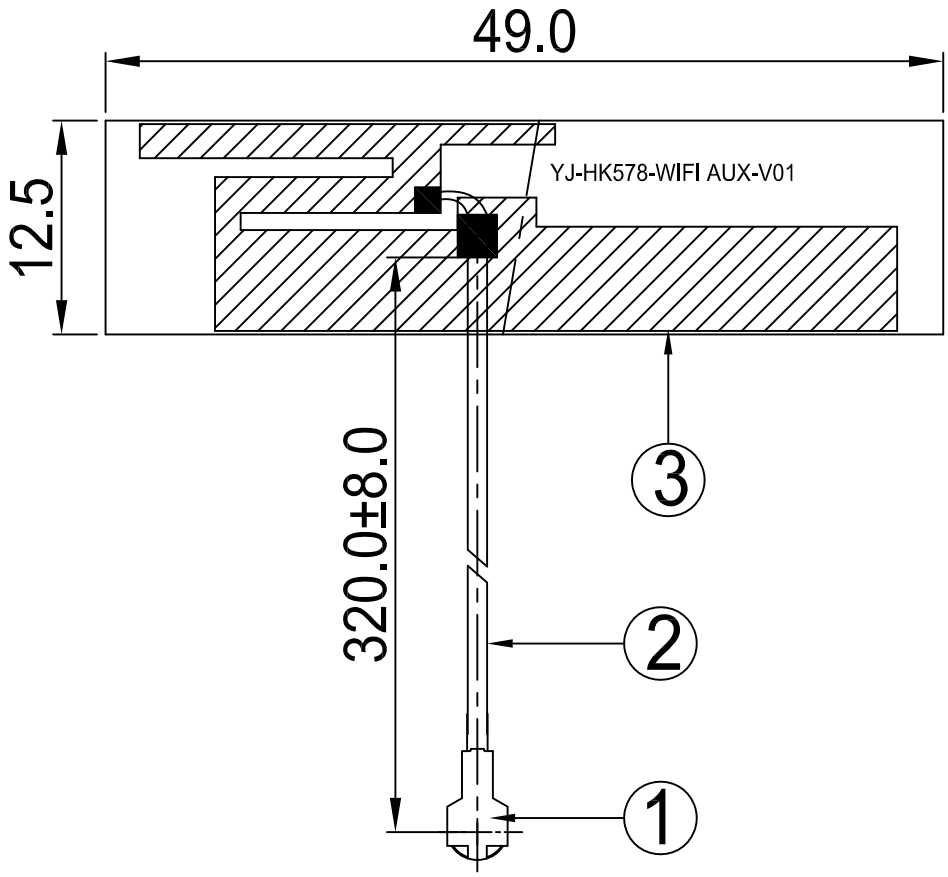

NO	PART NAME	DESCRIPTION	Material	Part Number	Q.TY
3	FPC	49.0*12.5mm	FPC	FPC11XXXA.P01	1
2	Coaxial Cable	O.D.1.13 Gray 低损线	O.D.1.13	COA100XXA.P01	1
1	Mini Connector	Au Plated 4L	Cu	TER100XXA.P01	1

东莞市一佳电子通讯科技有限公司
Dongguan YiJia Electronics Communication Technology Co.,Ltd.
Tel :0769-82586086
Fax:0769-82586086

PART NAME: WIFI AUX Antenna L=320mm MHF

PART NO.: YJQ01.220.004.302A

DATE: 2022-09-28

APPROVED BY	CHECKED BY	DESIGNED BY	
覃健宇	周颖杰	廖光喜	UNITS: mm SCALE: 1/1 REVISION: A

Tolerance
X.X ±0.50
X.XX±0.15
X° ±3°

天线规格
Antenna Specification

Electrical Properties	
Frequency	2.4-2.5GHz 5.15-5.85GHz
Impedance	50 Ohm Nominal
V.S.W.R	2.0 Max
Gain	5.2 dBi@2.4-2.5GHz 5.3 dBi@5.15-5.85GHz
Radiation	Omni-directional
Polarization	Linear
Physical Properties	
Connector	4L-IPEX
Cable Type	O.D.1.13mm低损耗
Cable Length	320mm
Cable Color	Gray
Operating Temp.	-40 ~ +85 ˚C
Storage Temp / Humidity	25±5˚C / <70%

add：东莞市长安镇沙头社区木鱼路59号元富工业区 Tel:0769-82586086 Fax:0769-82586086

Antenna Performance Test

Agilent E5071B	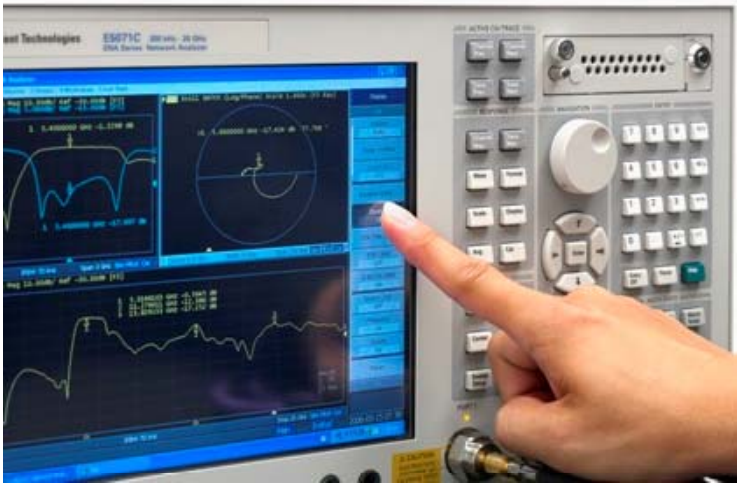
S Parameter Test // WIFI aux Antenna	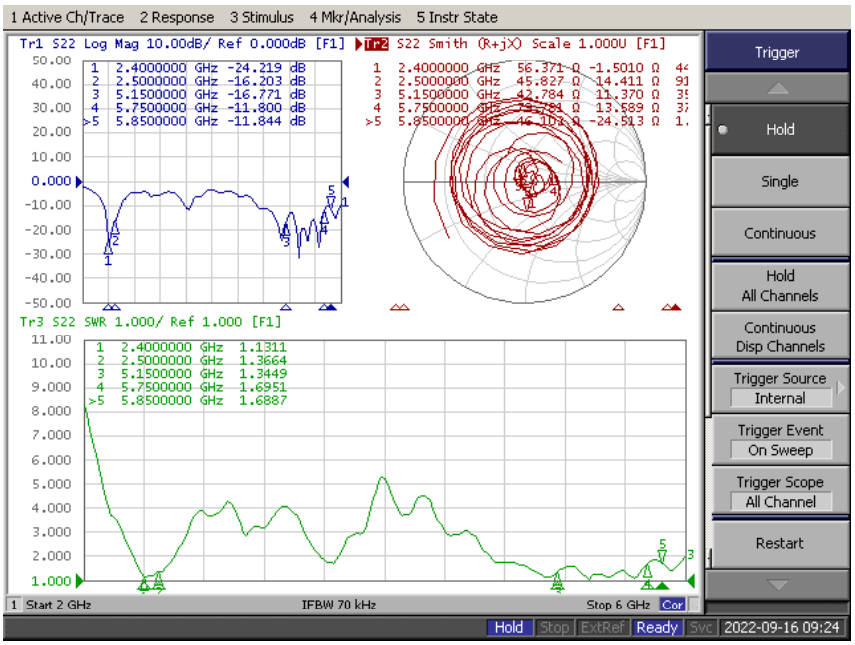

add：东莞市长安镇沙头社区木鱼路59号元富工业区 Tel:0769-82586086 Fax:0769-82586086

Passive Test For WiFi aux Antenna(2.4G)			
Freq (MHz)	Effi (%)	Effi (dB)	Gain (dBi)
2400	52.1	-2.8	5.2
2410	50.4	-3.0	5.0
2420	47.9	-3.2	4.8
2430	46.1	-3.4	4.5
2440	46.1	-3.4	4.7
2450	47.8	-3.2	5.0
2460	46.7	-3.3	5.2
2470	46.2	-3.4	5.2
2480	45.3	-3.4	5.0
2490	44.7	-3.5	4.7
2500	42.3	-3.7	4.3

add：东莞市长安镇沙头社区木鱼路59号元富工业区 Tel:0769-82586086 Fax:0769-82586086

Passive Test For WiFi aux Antenna(5.8G)			
Freq (MHz)	Effi (%)	Effi (dB)	Gain (dBi)
5150	60.5	-2.2	4.4
5200	57.5	-2.4	4.3
5250	51.6	-2.9	3.9
5300	48.1	-3.2	3.5
5350	46.0	-3.4	2.6
5400	48.8	-3.1	2.2
5450	49.4	-3.1	2.7
5500	50.2	-3.0	3.7
5550	57.7	-2.4	4.8
5600	57.7	-2.4	5.2
5650	54.7	-2.6	5.3
5700	58.3	-2.3	5.0
5750	56.6	-2.5	4.3
5800	44.5	-3.5	3.1
5850	48.4	-3.2	3.5

add：东莞市长安镇沙头社区木鱼路59号元富工业区 Tel:0769-82586086 Fax:0769-82586086

Radiation Pattern For WiFi aux Antenna(2450MHz)

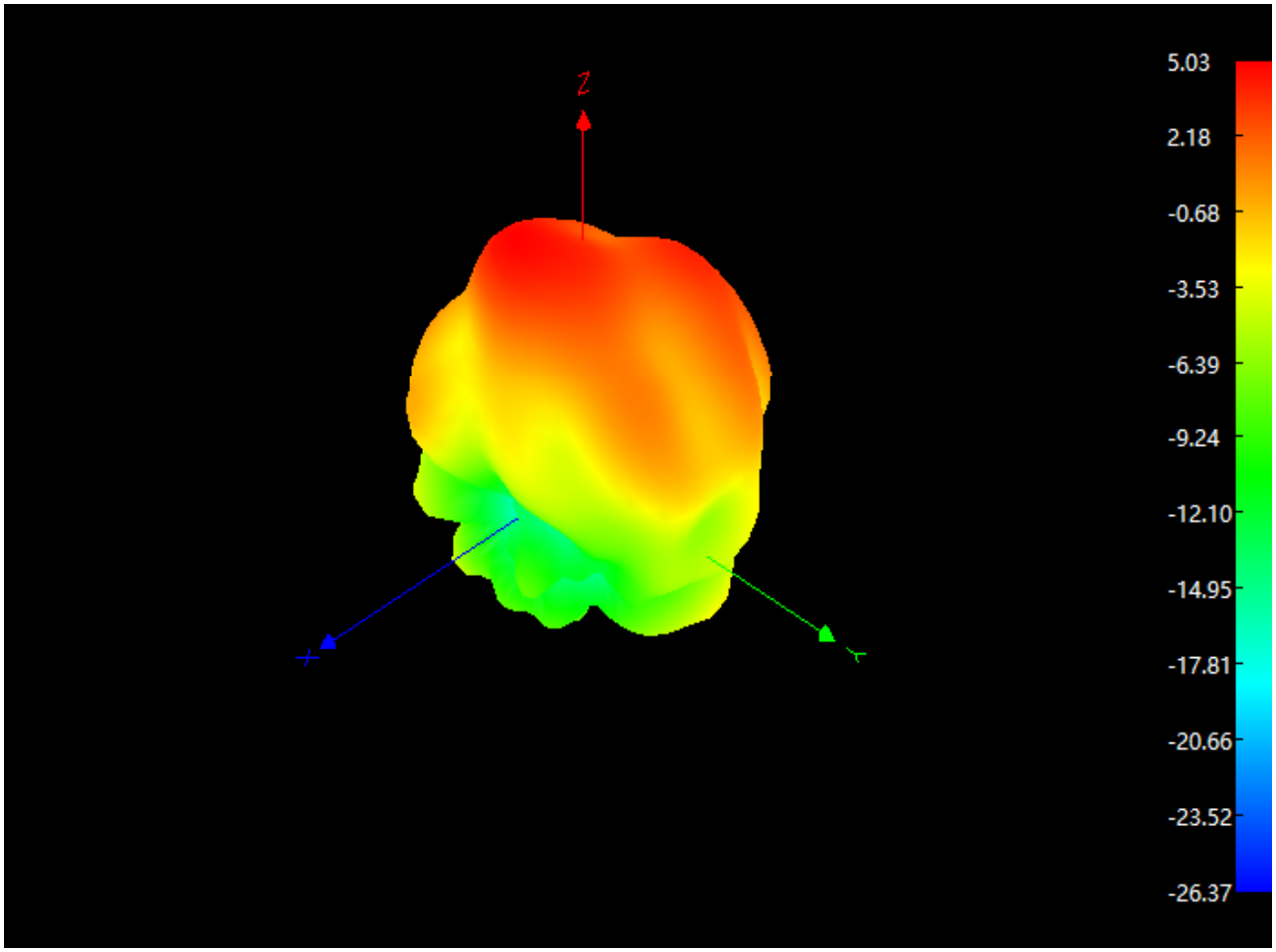

add：东莞市长安镇沙头社区木鱼路59号元富工业区 Tel:0769-82586086 Fax:0769-82586086

Radiation Pattern For WiFi aux Antenna(5500MHz)

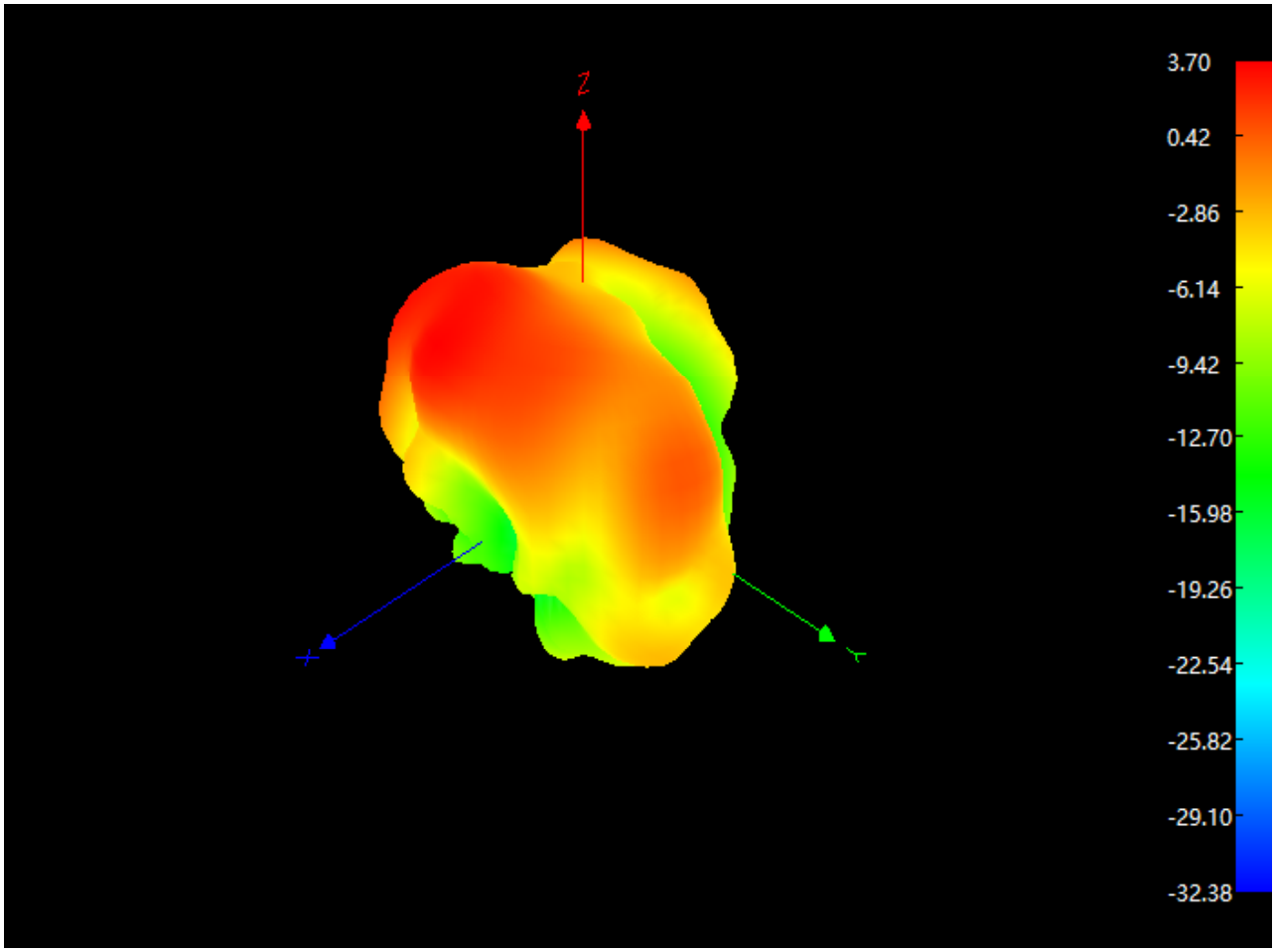

add：东莞市长安镇沙头社区木鱼路59号元富工业区 Tel:0769-82586086 Fax:0769-82586086

Antenna Active Test

Active Test For WIFI Antenna					
Band	**Channel**	**Data Rate**	**TRP**	**Data Rate**	**TIS**
WIFI 2.4G 802.11b	1	11Mbps	12.7	11Mbps	-82.0
	6		13.4		-81.7
	11		13.5		-81.1
WIFI 2.4G 802.11g	1	54Mbps	13.9	54Mbps	-70.0
	6		16.9		-70.2
	11		14.0		-71.3
WIFI 2.4G 802.11n	1	MCS7	13.2	MCS7	-67.8
	6		16.9		-68.9
	11		14.3		-68.5
WIFI 5G 802.11a	149	54Mbps	12.7	54Mbps	-71.4
	157		12.8		-72.1
	165		12.6		-71.5

add：东莞市长安镇沙头社区木鱼路59号元富工业区 Tel:0769-82586086 Fax:0769-82586086

Device	
WIFI Antenna	

add：东莞市长安镇沙头社区木鱼路59号元富工业区 Tel:0769-82586086 Fax:0769-82586086

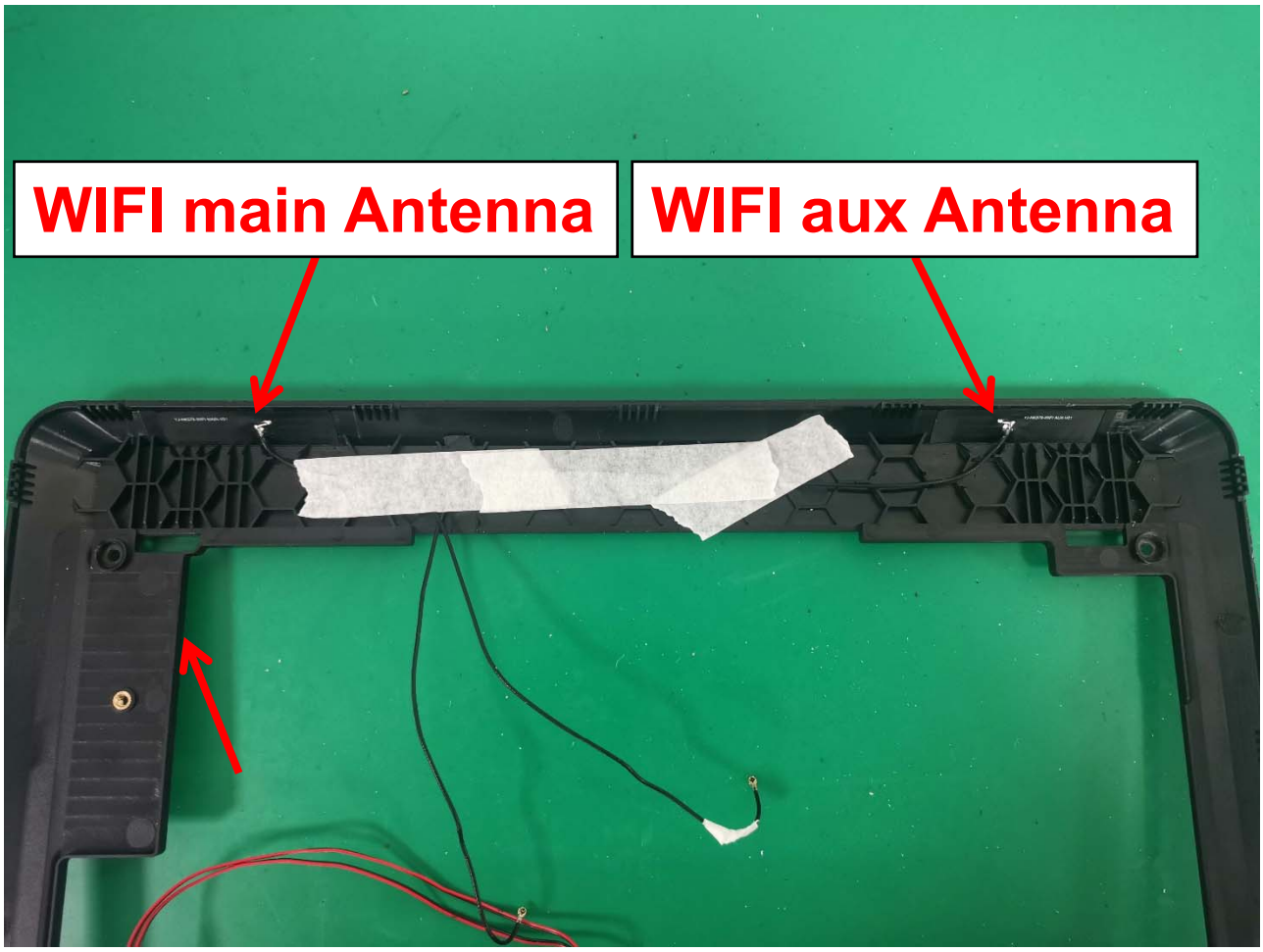

add：东莞市长安镇沙头社区木鱼路59号元富工业区 Tel:0769-82586086 Fax:0769-82586086

深 圳 微 波 通 线 缆 有 限 公 司
ShenZhen WBT Cable Co.,Ltd
地址：深圳市光明新区公明镇马山头村第四工业区 78C 三楼
电话：0755-29886180 传真：0755-29886850
Http://www.WBTcable.com 邮编：518106

物质安全数据表（MSDS）

一.物品名称与厂商资料

物品名称：同轴电缆
物品编号：RF113 单银低损耗线
制造商或供货商名称地址及电话：深圳微波通线缆有限公司 深圳市光明新区公明街道马山头第四工业区 78C 三楼
紧急联络电话及传真：TEL:0755-29886180,FAX:0755-29886850

二.成分辨析资料

纯物质：

中文名称	同义名称	组成分百分比（%）	化学文摘社登记号码(CAS No.)
镀银铜线	SC	11.80	Cu:7440-50-8,Ag:7440-22-4
聚全氟乙丙稀	FEP	22.0	FEP:25067-11-2
铜箔	Copper Foil	3.0	Cu:7440-50-8,PET:25038-59-9
镀锡铜线	TC	32.10	Cu:7440-50-8,Sn:7440-31-5
聚全氟乙丙稀	FEP	31.20	FEP:25067-11-2

危害物质：

危害物质	浓度或浓度范围（ppm）	
铅及其化合物 Pb	<1000	
镉及其化合物 Cd	<100	
汞及其化合物 Hg	<1000	
六价铬及其化合物 Cr^{6+}	<1000	
卤素	氯 Cl<900	氯 Cl+溴 Br<1500
	溴 Br<900	
SVHC161 种物质	禁止使用	

三．危害辨识数据

最重要危害与效应	健康危害效应：260℃以上可能分解，需安装排气装置。
	环境影响：按照废弃物处理及清扫法规处理，不可燃烧。
	物理性及化学性危害：无
	特殊危害：无
主要症状：对人的神经系统产生损害。	
危害物质分类：大气和水源。	

四．急救措施：

不同暴露途径之急救方法
吸入：若吸入熔融树脂释放的气体，将患者移至通风处 皮肤接触：被熔融树脂碰触皮肤，需即可以大量清水冷却后，依照烫伤之临床方式处理

眼睛接触：大量清水冲洗。
食入：用清水漱口。
最重要症状及危害效应：无
对急救人员之防护：对流换气。
对医师之提示：吸氧

五．灭火措施：

适用灭火剂：水，化学干粉，二氧化碳，泡沫。
灭火时可能遇到之特殊危害：避免气体吸入。
特殊灭火程序：移除可燃物。
消防人员之特殊防护设备：防毒面具。

六．泄露处理方法

个人注意事项：粉状和颗粒状树脂。
环境注意事项：不可填埋。
清理方法：按照废弃物处理及清扫法规处理，不可燃烧。

七．安全处置与储存方法

处置：避免高温和火源接触。
存储：通风干燥处。

八．暴露预防措施

工程控制：无
控制参数：八小时日时量平均容许浓度/短时间时量平均容许浓度/最高容许浓度：未定
生物指标：未定
个人防护措施： 呼吸防护：安装排气装置 手部防护：佩戴手套 眼睛防护：不需要 皮肤及身体防护：不需要
卫生措施：不需要

九．物理及化学性质

物质状态：固体	形状：白色粉末/透明颗粒
颜色：白色/透明	气味：无
PH 值：7	沸点/沸点范围：-
分解温度：380℃/360℃	闪火点：-

自燃温度：-	爆炸界限：-
蒸汽压：-	蒸汽密度：-
密度：2.05/2.15g/cm^3	溶解度：-

十．安定性及反应性

安全性：常温下及其安定且具化学惰性
特殊情况下可能之危害反应：高温或燃烧分解气体对人体神经系统有损害。
应避免之状况：不可燃烧。
应避免之物质：金属钠及其强酸的混合物。
危害分解物：气体及粉尘。

十一．毒性资料

急毒性：无
局部效应：无
致敏效应：无
慢毒性或长期毒性：无
特殊效应：无

十二．生态资料

可能之环境影响/环境流布：此项产品无法被生物分解，但可经适当之方式予以回收利用，不含铅，汞，镉，铬等添加物或复合物。

十三．废弃处置方法

废弃处置方法：按照废弃物处理及清扫法规要求送专业资质公司处置

十四．运送资料

国际运送规定：此物质无危险性。
联合国编号：无
国内运送规定：无
特殊运送方法及注意事项：无

十五．法规资料

适用法规：遵循欧盟 REACH 法规相关要求。

十六．其他资料

参考文献：-	
制表单位：深圳微波通线缆有限公司	
地址：深圳市光明新区公明街道马山头第四工业区 78C 三楼	
电话：0755-29886180	
制表人：职称：工程经理	姓名：范强
制表日期：2014-12-01	

， 安 全 資 料 表

版權 2021-01-10

，一、化學品與廠商資料

化學品名稱：液態熱固軟板油墨 PSM-800FSDM-A/SMH-800
其他名稱：
建議用途及限制使用：柔性电路板(PI/Cu) ,手機天線板
製造者、輸入者或供應者名稱、地址及電話：製造者：優立實業股份有限公司 住址：桃園市觀音區經建四路 22 號　　電話：886-3-4836651
緊急聯絡電話/傳真電話：電話：886-3-4836651、傳真：886-3-4837487

二、危害辨識資料

化學品危害分類：
健康及環境危害：急毒性物質（吞食）第 4 級、腐蝕／刺激皮膚物質第 2 級、嚴重損傷／刺激眼睛物質第 2A 級、皮膚過敏物質第 1 級、致癌物質第 2 級、水環境之危害物質（急毒性）第 2 級。
標示內容： 象 徵 符 號：   警　示　語：警告 危害警告訊息： 吞食有害 造成皮膚刺激 造成嚴重眼睛刺激 可能造成皮膚過敏 懷疑致癌 對水生生物有毒 危害防範措施： 置容器於通風良好的地方 遠離高溫 使用時勿吃、喝 衣服一經污染，立即脫掉 戴眼罩／護面罩 若與眼睛接觸，立刻以大量的水洗滌後洽詢醫療 戴上合適的手套 勿吸入氣體/煙氣/蒸氣/霧氣 使用前取得說明 置放於上鎖處 在瞭解所有安全防範措施之前切勿處置 避免釋放至環境中
其他危害：—

三、成份辨識資料

混合物：

中英文名稱：液態熱固軟板油墨 PSM-800FSDM-A/SMH-800		
化學性質：		
危害成分之中英文名稱	化學文摘社登記號碼（CAS No.）	濃度或濃度範圍(成分百分比)
環氧丙烯酸酯寡聚物 Epoxy acrylate oligmer	28064-14-4	50 %
二氧化矽 Fused silica	7631-86-9	13 %
芳香族溶劑 Aromatic solvent	64742-94-5	4 %

二丙二醇甲基醚 Methyl dipropylene glycol	34590-94-8	4%
碳黑 Carbon black	1333-86-4	3.5 %
硫酸鋇 BaSO4	13462-86-7	24 %
光敏劑及其它 Photoinitiator and the others	5495-84-1	1.5 %

四、急救措施

不同暴露途徑之急救方法：

吸　　入：1.施救前先做好自身的防護措施。
2.移走污染源或將患者移至新鮮空氣處。
3.若有病人呼吸停止，立即由受過訓的人施以人工呼吸，若心跳停止，施行心肺復甦術，當患者吸入和吞下毒性物質時，別直接使用口對口人工呼吸，應使用單向給氣式之口袋型面罩和其他醫療器材來執行人工呼吸。
4.保持患者安靜及維持正常體溫。6.儘速就醫治療。

皮膚接觸：儘快以緩和流動的水沖洗受污染區域至少20 分鐘，沖水前，脫掉污染的衣物、鞋子、皮飾品。

眼睛接觸：立即將眼皮撐開用緩和流動的水沖洗受污眼睛至少20 分鐘，並立即就醫。

食　　入：1.若患者即將喪失意識，或已喪失意識或痙攣，不可餵食任何東西。
2.不可催吐，並給予240-300ml 的水。
3.如果自發性嘔吐，讓其漱口，並反覆給水。

最重要症狀及危害效應：—

對急救人員之防護：—

對醫師之提示：—

五、滅火措施

適用滅火劑：化學乾粉、酒精泡沫、二氧化碳、噴水，大火：噴水、水霧、泡沫水霧。

滅火時可能遭遇之特殊危害：
1.其蒸氣及熱分解物易燃及有毒。
2.其蒸氣較空氣重，能傳播至遠處之火源處，發生回火。
3.蒸氣與大氣結合可能會發生爆炸。
4.當此物質在室內、室外或下水道有蒸氣爆炸危險。

特殊滅火程序：
1.在安全距離的地方滅火，保持在上風位置。
2.可用水冷卻容器，分散蒸氣沖洗外洩並稀釋外洩物，保護搶救人員。
3.用水噴灑露在火焰中的容器四週，使容器冷卻，直到火勢被撲滅為止。離開容器的本端以維安全。
4.撲滅或移開所有引燃源。

消防人員之特殊防護裝備：消防人員必須配戴空氣呼吸器、消防衣及防護手套。

六、洩漏處理方法

個人應注意事項：
1.限制人員進入，直至外溢區完全清理乾淨為止。
2.由受過訓之人員負責清理之工作。
3.穿戴適當的個人防護裝備。

環境注意事項：
1.移去引火源。
2.保持洩漏區通風。
3.處在上風處，避免進入低處。
4.在不危及人員安全情況下，搬移或隔離易燃和可燃物。
5.隔離污染源至少100 至200 公尺。

清理方法：
1.不可碰觸外洩物。

2.避免外洩物進入下水道或密閉的空間內。
3.在安全許可的情形下，設法阻止或減少溢漏。
4.用不會和外洩物反應的泥土、沙或相似穩定且不可燃的物質圍堵外洩物。
5.少量溢漏時，用不會和外洩物反應之吸收劑吸收。已污染的吸收劑和外洩物具有同樣的
6.危害性，須置於加蓋並標示的適當容器裡。用水沖洗溢漏區域。
7.大量溢漏時：連絡消防、緊急處理單位及供應商以尋求協助。

七、安全處置與儲存方法

處置：
1.貯存於陰涼乾燥涼好通風的地方，並避免陽光直射、熱及引火源。
2.遠離不容物如強氧化物、強酸、水。
3.使用接地、與無火花之電器儀器、通風系統。
4.小量時貯存於冰箱，並使用防爆炸冰箱。
5.設外洩警報系統。
6.須貯存區與工作區隔離，並限制人員出入貯存區，並貼示警告標語。
7.避免碰撞，並就近設滅火系統。
8.不可單獨工作，另一人需隨時待命救援。
9.在工作區使用許可裝運燃燒性液體的容器，並且所有桶槽、轉裝容器都要接地，且須接觸到裸金屬。
10.使用最小可能的量，並在指定區內，使用適合的通風系統。
11.標示容器，當不使用時要緊蓋。

儲存：
1.貯存於陰涼乾燥涼好通風的地方，並避免陽光直射、熱及引火源。
2.小量時貯存於冰箱，並使用防爆炸冰箱。
3.須貯存區與工作區隔離，並限制人員出入貯存區，並貼示警告標語。
4.標示容器，當不使用時要緊蓋。

八、暴露預防措施

工程控制：
1.單獨使用步產生火花、接地的通風系統。
2.排氣口直接通到室外、並採取保護的重要措施。
3.大量使用此物質時，可能需要局部排氣裝置和製程密閉。
4.供給充分新鮮空氣以補充排氣系統抽出的空氣。

控制參數：—
八小時日時量平均容許濃度/短時間時量平均容許濃度/最高容許濃度：—
生物指標：—

個人防護設備：
- 呼吸防護：1.含有機蒸汽過濾毒罐之化學品過濾毒呼吸防護具或自攜式呼吸防護具。
  2.定流量式供氣式呼吸防護具，動力型含有機蒸氣濾罐空氣淨化呼吸防護具，含有機蒸氣濾毒罐的面罩，全面型自攜式呼吸防護具，全面型供氣式呼吸防護具，全面型含有機蒸汽濾毒罐之化學品濾毒呼吸防護具。
  3.正壓全面型攜式呼吸防護具或含輔助型正壓自攜式呼吸防護具之正壓全面型供氣式呼吸防護具。
  4.有機蒸氣濾毒罐的面罩，逃生型自攜式呼吸防護具。
- 手部防護：丁基橡膠最佳，氯聚乙烯，聚乙烯酸，氟化彈性體、丁基橡膠/氯丁橡膠，鐵氟龍，氯丁橡膠/天然橡膠銀罩，氟化彈性體/氯丁基橡膠亦佳的防滲手套。
- 眼睛防護：1.防濺化學安全眼鏡。
  2.全面罩。
  3.勿戴隱形眼鏡。
- 皮膚及身體防護：1.工作鞋及連身工作服。
  2.工作區要有淋浴/沖洗設備。

衛生措施：
1.工作後儘速脫掉污染之衣物，洗淨後才可再穿戴。

2.工作場所嚴禁抽煙或飲食。 3.處理此物後，須徹底洗手。 4.維持作業場所清潔。

九、物理及化學性質

外觀(物質狀態、顏色等)：黑色膏狀流體	氣味：臭味
嗅覺閾值：—	熔點：-25℃
pH 值：—	沸點/沸點範圍： 218-219℃
易燃性(固體、氣體)：—	閃火點：＞75℃
分解溫度：—	測試方法：(　) 開杯 (　V　) 閉杯
自燃溫度：不自燃	爆炸界限：—
蒸氣壓：—	蒸氣密度：6.07
密度：1.24~1.26（水=1）	溶解度：微溶於水
辛醇/水分配係數(log Kow)：—	揮發速率：—

十、安定性及反應性

安定性：密封乾燥容器下安定。
特殊狀況下可能之危害反應：—
應避免之狀況： 洩漏、火焰和其他引火源。
應避免之物質：酸、氧化劑
危害分解物：一氧化碳

十一、毒性資料

暴露途徑：皮膚、吸入、眼睛、食入
症狀：刺激感、困倦、暈眩、疲倦、頭痛、反胃、呼吸困難及痙攣
急毒性： 吸入：1.蒸氣會刺激鼻、咽喉及肺。 皮膚：1.純液體或濃溶液會造成嚴重刺激及灼傷感。 2.蒸氣對皮膚會造成刺激。 3.經由皮膚接觸，液體會被吸收達中毒量。 眼睛：1.蒸氣會刺激眼睛及催淚。 2.液體會造成嚴重眼睛灼傷。 食入：1.會對口及消化道造成明顯的局部刺激。
慢毒性或長期毒性：—

十二、生態資料

生態毒性：—
持久性與降解性：避免進入水源入口及水路中，對水中生物具傷害性。
生物蓄積性：—
土壤中之流動性：—
其他不良效應： —

十三、廢棄處置方法

廢棄處置方法： 1.參考相關法規處理。 2.依照倉儲條件儲存待處理的廢棄物。 3.可採用特定的焚化或衛生掩埋法處理。

十四、運送資料

聯合國編號：—

版權 2021-01-10

聯合國運輸名稱：—
運輸危害分類：依福建商檢報告 0128227 判定為普通貨物
包裝類別：可按普通貨物辦理
海洋污染物(是/否)：否
特殊運送方法及注意事項：—

十五、法規資料

適用法規： 1.職業安全衛生設施規則 2.道路交通安全規則 3.事業廢棄物儲存清除處理方法及設施標準 4.危害性化學品標示及通識規則 5.勞工作業場所容許暴露標準

十六、其他資料

參考文獻	1.RTECS 資料庫，TOMES PLUS 光碟，Vol.41，1999 2.HSDB 資料庫，TOMES PLUS 光碟，Vol.41，1999	
製表單位	名稱：優立實業股份有限公司	
	住址/電話：桃園市觀音區經建四路 22 號　　電話：886-3-4836651	
製表人	職稱：總經理	姓名（簽章）：黃志輝
製表日期	2021.01.10	
備　　註	上述資料中”—”代表目前查無相關資料，而符號”／”代表此欄位對該物質並不適用	

上述資料由本公司提供，對上述資料已力求正確，但錯誤恐仍難免，各項數據與資料僅供參考，使用者請依應用需求，自行負責判斷其可用性。

MATERIAL SAFETY DATA SHEET

产 品 安 全 资 料

Section1 Preparation Identification and Company 样品标公司

Preparation Identification 标记： 防氧化原液DX-808HT

Manufacturers Name 公司名称： 深圳市东方星化工科技有限公司

Manufacturers Address 地址： 东莞市虎门镇大宁村大板地工业区

Emergency Telephone Number 联系电话：0769-85015502

Emergency Tex Number 传真：0769-85015500

Postal code 邮政编码：523900

Section 2 Composition information on Ingredients 成份组成

学名 (Chemical Name)	化学文摘社登记号码 (CASNO)	浓度(%) (Concentration)
苯并咪唑 Benzimidazole	95-14-7	1%
甲酸 Formic acid	64-18-6	3%
添加剂 Additives	----------	0.05%
DI 水DI water	7732-18-5	95.95%

Section 3 Hazards Identification 危险性概述

Safety and Risk 安全和危险性: DX-808HT contain formic acid which may cause severe burns. 含有甲酸可能导致灼伤

Section 4 First Aid Measures 急救措施

Eyes 眼睛：flush with plenty of clean, cool water for 15 minutes and get immediate medical attention 大量清水冲洗并尽快就医

Skin 皮肤: flush with plenty of clean, cool water for 15 minutes 大量清水冲洗15 分钟

Ingestion 食入: get immediate medical attention 尽快就医

Section 5 Fire Fighting Measures 消防措施

不可燃

Section 6 Accidental Release Measures 泄漏应急措施

Personal Precautions 个人防护: wears protective clothing, chemical safety goggles,respirator, face shield and rubber gloves 穿戴耐酸保护服，护目镜、面罩和橡胶手套

Clean-up Procedure 清洗:flush with plenty of clean, cool water 用大量清水冲洗

Section 7 Handling and Storage 操作与储存

Ventilation 通风: Store indoors in a cool dry area 阴凉干燥处

Temperature 温度: Store indoors in a cool dry area 阴凉干燥处

Containers 容器: Keep containers tightly closed 。Loosen closure cautiously whenopening。保持容器密封，打开时慎重

Incompatible Materials 不相容物质: alkalis and oxidizers 碱性和氧化物

Pot Life 有效期： six months 6 个月

Section8 Exposure Controls /Personal Protection 接触控制与个人保护

Ventilation 通风: Exhaust ventilation is recommended 推荐抽出式通风

Respiration 呼吸: respirator。Avoid breathing vapors or mist。防毒面具避免吸入蒸汽或烟雾
Eyes and Face 眼睛和脸: chemical safety goggles and face shield 护目镜和脸罩
Hands and Skin 手和皮肤:rubber gloves 橡胶手套
Clothing : protective clothing 耐酸保护服
Section 9 Physical and Chemical Properties 物理和化学特性
Appearance 外观：浅蓝色液体
Odour 气味：淡醋酸味
PH：2.7±0.3
Section 10: Stability and Reactivity 稳定性和反应活性
Chemical Stability 化学稳定性： 弱的反应能力
Incompatible Materials 不相容物质：alkalis and oxidizers 碱性和氧化物
Section 11 Toxicological Information 毒性资料
NDA 无毒
Section 12 Disposal Consideration 废弃处理
Dispose of material in approved sites 中和后过滤排放，过滤物交当地合法批准单位。
Section 13 生态资料
生态毒性：无
生物降解性：无
非生物降解性：无
其它有害作用：无
Section 14 法规信息
通用法规：
劳工安全卫生规则
特定化学物预防标准
Section 15 运送资料
国内运输规定：依道路交通安全规则第84 条
Section 16 其他资料
制表单位：深圳市东方星化工科技有限公司
制表地址：东莞市虎门镇大宁村大板地工业区
制表部门：品质部
制表日期：2017 年 1 月

CHUNG YU INDUSTRY CORPORATION

Material Safety Data Sheet

Section 1： Chemical Product and Company Identification

Product name	Thermal curable two-component marking ink
Other means of identification	ZSR-150 ZM-400WF
Recommended use of the chemical and restrictions on use	Use in PCB fabrication.
Manufacturer/Supplier identification	CHUNG YU INDUSTRY COPORATION
Manufacturer/Supplier address	618 Yen-Ping Rd., sec. 3, Ping-Jeng, Tao-Yuan, Taiwan
Emergency telephone No.	(886-3)4641205
FAX No.	(886-3)4644839

Section 2： Hazards Identification Information

Hazard classifications of the product	Inflammable liquids(II),Carcinogens, (II), Inhalation of hazardous substances (I)
Label elements	 Hazard symbols: Fire Caution catchwords: Danger Hazard massages: Inflammable liquids and vapor Harmful to swallow Skin irritation Eye irritation
Other hazards	—

Section 3： Composition, Information on Ingredients

Mixture：

Chemical name	Concentration(% of contents)	CAS. NO.
Epoxy resin	50	25085-99-8
Barium sulfate	15	7727-43-7
Titanium dioxide	30	13463-67-7
Naphtha	5	8030-30-6

Section 4 ： First-aid Measures

The first-aid measures for different exposure routes:	
Eyes contact	Immediately flush eyes with plenty of water for at least 15 minutes, occasionally lifting the upper and lower eyelids.
Skin contact	Flush skin with plenty of soap and water for at least 15 minutes while removing contaminated clothing and shoes.
Swallow	Do not induce vomiting. If conscious and alert, rinse mouth and drink 2-4 cupfuls of milk or water.
Inhalation	Remove from exposure to fresh air immediately.
The most important symptoms and hazardous effects	Headache, nausea
Notes to Physicians	Please provide the MSDS for physicians.

Section 5： Fire-fighting Measures

Suitable fire extinguishing media	Chemical dry powders, chemical foam, carbon dioxide
General information	As in any fire, wear a self-contained breathing apparatus in pressure-demand, MSHA/NIOSH (approved or equivalent), and full protective gear. During a fire, irritating and highly toxic gases may be generated by thermal decomposition or combustion.
Specific fire-fighting methods	It’s not suitable to use water extinguish.

Section 6： Accidental Release Measures

Person-related precautionary measures	Do not inhale vapors / aerosols. Ensure supply of fresh air in enclosed rooms.
Environmental-protection measures	Do not allow to enter sewerage system.
Procedures for cleaning / absorption	Take up with liquid-absorbent material. Forward for disposal. Clean up affected area

Section 7： Safe Handling and Storage Measures

Handling	Wash thoroughly after handling. Remove contaminated clothing and wash before reuse. Avoid contact with eyes, skin, and clothing. Avoid ingestion and inhalation.
Storage	Store in a cool(15～25℃), dry place. Keep container closed when not in use.

Section 8： Exposure Controls Measures

Engineering controls	Use adequate general or local exhaust ventilation to keep airborne concentrations below the permissible exposure limits. Use process enclosure, local exhaust ventilation, or other engineering controls to control airborne levels.
Control parameters	

Term	8 hours time weighted averagw exposure limits TWA	Short-term exposure limits STEL	Maximum limits CEILING	Biological standards BEIs
Solvent	100ppm	125ppm	—	—

Personal protective equipment	Eye protection: Wear safety glasses and chemical goggles if splashing is possible. Skin protection: Wear appropriate protective gloves and clothing to prevent skin exposure. Clothing: Wear appropriate protective clothing to minimize contact with skin. Respirators: Wear a NIOSH/MSHA or European Standard EN 149 approved full-facepiece airline respirator in the positive pressure mode with emergency escape provisions.

Section 9： Physical and Chemical Properties

Physical state：paste	Color：white
Odor threshold：—	Odor：slightly pungent
pH value：—	Melting point：—
Decomposition temperature：—	Boiling point：110-190℃ (solvent)
Flammability(solid, gas)：—	Flash point：38-43℃ (solvent) Test methods：—
Autoignition temperature：—	
Vapor pressure：<5 mmHg @ 25℃ (solvent)	Explosion limits：—
Specific gravity/Density：1.45～1.55 g/cm^3 (water=1)	Solubility in water：insoluble

Section 10： Stability and Reactivity

Chemical stability	Stable under normal temperatures and pressures.
Conditions to avoid	Fire.
Incompatibilities with other materials	Strong oxidants.
Hazardous decomposition products	Irritating and toxic fumes and gases.
Hazardous polymerization	Has not been reported.

Section 11： Toxicological Information

Information on the likely routes of exposure	Skins, swallow, inhale, eyes
Symptoms	Nausea, vertigo, irritation
Acute toxicity	Skins: Slight irritation Swallow: Nausea, vomit, and the other symptoms same as inhale Inhale: Cause the respiratory tract irritation, nausea, vomit, headache Eyes: The vapor cause eyes irritation LD50(solvent): >5000mg/kg (mouse, swallow) LC50:－
Further information	Further hazardous properties cannot be excluded. The product should be handled with the usual when dealing with chemicals

Section 12： Ecological Information

Ecotoxic effect	Quantitative data on the ecologic effect of this product are not available.
Further ecologic data	No ecological problems are to be expected when the product is handled and due care and attention.

Section 13 - Disposal Considerations

Dispose of in a manner consistent with federal, state, and local regulations.

Section 14 - Transport Information

1. United Nation number (UN No.): 1866
2. UN proper shipping name: －
3. Transport hazard classes: 3
4. Packing group:－
5. Marine pollutant (Yes/No): No
6. Specific transport measures and precautionary conditions: －

Section 15 - Regulatory Information

1. European / International Regulations：European labeling in accordance with EC Directives.
2. Other using condition should follow local regulations.

Section 16 - Additional Information

Organization that prepared the MSDS	Name: R&D	TEL: (886-3)4641205	
	Address: 618 Yen-Ping Rd., sec. 3, Ping-Jeng, Tao-Yuan, Taiwan		
Person who prepared the MSDS	Job: manager	Name: Wan-Hua Lee	
Date the MSDS was prepared	2018/12/20		

The information above is believed to be accurate and represents the best information currently available to us. However, we make no warranty of merchantability or any other warranty, express or implied, with respect to such information, and we assume no liability resulting from its use. Users should make their own investigations to determine the suitability of the information for their particular purposes. In no way shall the company be liable for any claims, losses, or damages of any third party or for lost profits or any special, indirect, incidental, consequential or exemplary damages, howsoever arising, even if the company has been advised of the possibility of such damages.

Article Information Sheet

Copyright,2015,3M Company.
All rights reserved. Copying and/or downloading of this information for the purpose of properly utilizing 3M products is allowed provided that: (1) the information is copied in full with no changes unless prior written agreement is obtained from 3M, and (2) neither the copy nor the original is resold or otherwise distributed with the intention of earning a profit thereon.

This product is defined as an article based on the definition of an Article under China New Chemical Environmental Management Method MEP Decree No. 7, and does not require a Safety Data Sheet under Dangerous Chemical Safety Management Regulatory China State Council Decree No.591 and China GB/T16483-2008 Safety Data Sheet for Chemical Products Content and Order of Sections. This article information sheet (AIS) is provided as a courtesy in response to a customer request. When used as recommended or under ordinary conditions, the product should not present a health and safety hazard. However, use or processing of the product not in accordance with the product's recommendations or not under ordinary conditions may affect the performance of the product and may present potential health and safety hazards.

Document Group:	07-7168-3	**Version Number:**	1.00
Issue Date:	2015/05/19	**Supercedes Date:**	Initial Issue

SECTION 1: Identification

1.1. Product identifier
3M™ 300LSE Adhesive Transfer Tapes: 8132LE, 8153LE, 9453FL, 9453LE, 9471FL, 9471LE, 9472FL, 9472LE, 9472LEU, 9653LE, 9671LE, 9672LE and 9698LE

Other means of identification

1.2. Recommended use and restrictions on use

Recommended use
Bonding & Attachment, Industrial use

1.3. Supplier's details
Company: 3M Company
Division: Industrial Adhesives and Tapes Division
ADDRESS: 3M Center, St. Paul, MN 55144,USA
Phone: 021-22105335
FAX: 021-22105036
E Mail: Tox.cn@mmm.com
Website: www.3m.com.cn

1.4. Emergency telephone number
021-22105335

SECTION 2: Hazard identification

2.1. Classification of the substance or mixture
This product is considered to be an article and is exempt from GHS classification.

SECTION 3: Composition/information on ingredients

This material is a mixture.

Ingredient	C.A.S. No.	% by Wt
Paper or Film Liner	Mixture	Not Applicable
Acrylic Polymer Adhesive	Trade Secret	100

SECTION 4: First aid measures

4.1. Description of first aid measures

Inhalation:
No need for first aid is anticipated.

Skin Contact:
No need for first aid is anticipated.

Eye Contact:
No need for first aid is anticipated.

If Swallowed:
No need for first aid is anticipated.

SECTION 5: Fire-fighting measures

In case of fire: Use a fire fighting agent suitable for ordinary combustible material such as water or foam.

SECTION 6: Accidental release measures

6.1. Personal precautions, protective equipment and emergency procedures
Not applicable.

6.2. Environmental precautions
Not applicable.

6.3. Methods and material for containment and cleaning up
Not applicable.

SECTION 7: Handling and storage

7.1. Precautions for safe handling
This product is considered to be an article which does not release or otherwise result in exposure to a hazardous chemical under normal use conditions.

7.2. Conditions for safe storage including any incompatibilities
No special storage requirements.

SECTION 8: Exposure controls/personal protection

This product is considered to be an article which does not release or otherwise result in exposure to a hazardous chemical

under normal use conditions. No engineering controls or personal protective equipment (PPE) are necessary.

SECTION 9: Physical and chemical properties

9.1. Information on basic physical and chemical properties

Physical state	Solid
Specific Physical Form:	Roll of Tape
Appearance/Odor	Translucent adhesive, slight acrylate odor, paper or fim quick release liner
Odor threshold	*Not Applicable*
pH	*Not Applicable*
Melting point/Freezing point	*No Data Available*
Boiling point/Initial boiling point/Boiling range	*Not Applicable*
Flash Point	*Not Applicable*
Evaporation rate	*Not Applicable*
Flammability (solid, gas)	Not Classified
Flammable Limits(LEL)	*Not Applicable*
Flammable Limits(UEL)	*Not Applicable*
Vapor Pressure	*Not Applicable*
Vapor Density	*Not Applicable*
Density	*Not Applicable*
Relative Density	*Not Applicable*
Water solubility	Nil
Solubility- non-water	*Not Applicable*
Autoignition temperature	*Not Applicable*
Decomposition temperature	*Not Applicable*
Viscosity	*Not Applicable*
Volatile Organic Compounds	*Not Applicable*
Percent volatile	*Not Applicable*
VOC Less H2O & Exempt Solvents	*Not Applicable*

SECTION 10: Stability and reactivity

This material is considered to be non reactive under normal use conditions.

SECTION 11: Toxicological information

Inhalation:
This product may have a characteristic odor; however, no adverse health effects are anticipated.

Skin Contact:
No health effects are expected

Eye Contact:
No health effects are expected

Ingestion:
No health effects are expected

Additional Information:
This product, when used under reasonable conditions and in accordance with the directions for use, should not present a health hazard. However, use or processing of the product in a manner not in accordance with the product's directions for use

may affect the performance of the product and may present potential health and safety hazards.

SECTION 12: Ecological information

This article is expected to present a low environmental risk either because use and disposal are unlikely to result in a significant release of components to the environment or because those components that may be released are expected to have insignificant environmental impact.

SECTION 13: Disposal considerations

Dispose of contents/container in accordance with the local/regional/national/international regulations.

SECTION 14: Transport Information

Not hazardous for transportation.

SECTION 15: Regulatory information

15.1. Safety, health and environmental regulations/legislation specific for the substance or mixture
This product is an article and is exempted from Measures on Environmental Management of New Chemical Substances and from IECSC inventory listing requirements.

SECTION 16: Other information

References
United Nations 'Recommendations on the Transport of Dangerous Goods - Model Regulations '
United Nations 'Globally Harmonized System of Classification and Labelling of Chemicals (GHS)'.

Revision information:
Conversion to AIS.

DISCLAIMER: The information on this Article Information Sheet is based on our experience and is correct to the best of our knowledge at the date of publication, but we do not accept any liability for any loss, damage or injury resulting from its use (except as required by law). The information may not be valid for any use not referred to in this Information Sheet or use of the product in combination with other materials. For these reasons, it is important that customers carry out their own test to satisfy themselves as to the suitability of the product for their own intended applications.

3M People's Republic of China AISs are available at www.3m.com.cn

MATERIAL SAFETY DATA SHEET (MSDS)

Issued: Dec 20 , 2007
Revised: Dec 20 , 2007

File No. 2302

1. CHEMICAL PRODUCT & COMPANY IDENTIFICATION

CHEMICAL PRODUCT NAME :	DURANEX XFR4840
NAME OF COMPANY :	WinTech Polymer Ltd.
SECTION IN CHARGE :	Quality Assurance Dept.
ADDRESS :	2-18-1 Konan, Minato-ku, Tokyo,108-8280 Japan
TELEPHONE NUMBER :	03-6711-8605
FACSIMILE NUMBER :	03-6711-8616

2. COMPOSITION/INFORMATION ON INGREDIENTS

SUBSTANCE/PREPARATION	:	Preparation
COMMON CHEMICAL NAME	:	Polybutyleneterephthalate
SYNONYMS	:	Polybutyleneterephthalate(PBT)
INGREDIENTS AND COMPOSITION	:	PBT≧80%, Phosphorus Flame retardant and others ≦20%
CHEMICAL FORMURA	:	
SERIAL № IN OFFICIAL GAZETTE	:	7-1039（base resin） (Law Concerning Examination and Regulation of Manufacture,etc.,of Chemical Substances)
CAS №	:	２４９６８－１２－５（base resin）

3. HAZARDS IDENTIFICATION

PHYSICAL AND CHEMICAL HAZARDS	:	Not applicable
HUMAN HEALTH EFFECTS	:	Not applicable
ENVIRONMENTAL EFFECTS	:	Not applicable
PHYSICAL AND CHEMICAL HAZARDS	:	It is inflammable substance and combustible if an igniting source is existent. Neither dangerous reaction,fire nor explosion can be caused under normal conditions.
THE CLASSIFICATION	:	Not applicable

4. FIRST-AID MEASURES

INGESTION	:	Help to vomit as much as possible. If sick feeling continues,and ask a physician for advice.
INHALATION	:	When a gas generated from the molten polymer,especially fume generated during combustion or heat, has been inhaled,remove fresh air without delay and wait until the victim is recovered. If sick feeling continues,ask a physician for advice.
SKIN CONTACT	:	Cool the contacted skin with clean water without delay,if a contact with the polymer In a molten form. Do not force to remove the solid resin on the skin. If any burns are observed on the skin,ask a physician for advice.

EYE CONTACT	:	Cool and rinse the eye with clean water for at least 15 minutes when the eyes had contact with molten polymer. In case of wearing contact lenses,remove the lenses as soon as possible,and ask a physician for advice. When the eye had contact with the polymer in an ordinary solid form,rinse the eye with clean water without delay. If the discomfort persists,ask a physician for advice.

5. FIRE-FIGHTING MEASURES

EXTINGUISHING MEDIA	:	Water,form fire-extinguishing agent,powder fire-extinguishing agent,and carbon dioxide gas.
SPECIFIC METHODS	:	Extinguish the fire with water. A method of extinguishing an ordinary fire may be applied. Do not apply water directly to processing machines.
SPECIFIC HAZARDS	:	Incomplete combustion leads to generation of toxic gases such as carbon monoxide or tetrahydrofuran,in addition to carbonic acid gas and water.
SPECIAL EQUIPMENT FOR THE PROTECTION OF FIREFIGHTERS	:	In case the fire gained force,use a gas mask or other protective equipment.

6. ACCIDENTAL LEAKAGE MEASURES

PERSONAL PRECAUTIONS	:	When pellets were spilled on the road or floor,wipe them off with a besom or cleaner not to cause slipping.
ENVIRONMENTAL PRECAUSION	:	Handle the spillage in accordance with provisions given in the "Resin pellet spillage preventive manual",in order to prevent intakes by marine animals and birds.

7. HANDLING AND STORAGE

HANDLING	:	This resin in a pellet form will neither ignite nor explode at room temperatures.
HANDLING 2	:	For molding work,effective means for local exhaust are required to discharge gases generated by melt processing.
HANDLING 3	:	Avoid inhaling of gases generated in moulding work. Do not directly touch resin of high temperature.
HANDLING 4	:	Avoid retaining hot resin in the processing machines for many hours.
HANDLING 5	:	This pellets spilled on the floor are likely to cause slipping. Remove such spillage at any times.
STORAGE	:	Keep the substance away from any fire or heat sources for the sake of safe storage.
RECOMMENDED PACKAGING MATERIALS	:	No information.

8. EXPOSURE CONTROL / PERSONAL PROTECTION

CONTROL CONCENTRATION	:	None at present
PERMISSIBLE CONCENTRATION	:	OSHA PEL/1985 Max. permissible concentration of inactive powder 15mg/㎥ - ditto - (Aspiration) 5 mg/㎥ ACGIH TLV/1992 1993 Exposure limit of the powder TWA 10 mg/㎥
ENGINEERING MEASURE	:	When handling dust: Use totally enclosed containers resisting dust explosion. When heat melted in molding: Effective local ventilation must be provided.

PERSONAL PROTECTIVE EQUIPMENT	:	
RESPIRATORY PROTECTION	:	Wear a dust-proof mask.
EYE PROTECTION	:	Wear protective glases or goggles.
HAND PROTECTION	:	Wear heat-resisting gloves against burns, when handling molten polymer.
SKIN & BODY PROTECTION	:	Wear long sleeve clothes against burns, when handling molten polymer.

9. PHYSICAL AND CHEMICAL PROPERTIES

APPEARANCE etc.	:	Pellet
BOILING POINT	:	Not applicable
VAPOUR PRESSURE	:	Not applicable
VOLATILITY	:	Not applicable
SUBLIMATION	:	None
MELTING POINT	:	228℃
DENSITY	:	1.32g/㎤
SOLUBILITY	:	Insolube in water
FLASH POINT	:	300℃ or higher
IGNITION POINT	:	300℃ or higher
EXPLOSION PROPERTY	:	Not applicable
INFLAMMABILITY	:	None
REACTIVITY WITH WATER	:	None
OXIDIZABILITY	:	None
SELF-REACTIVITY	:	None
DUST EXPLOSIVENESS	:	Upper explosion limit : Not applicable. Lower explosion limit : 35g/㎥

10. STABILITY AND REACTIVITY

STABILITY AND REACTIVITY	:	Stable for nomal storage or handling.

11. TOXICOLOGICAL INFORMATION

SKIN CORROSIVE OROPERTIES	:	No finding.
SENSITIZING & IRRITANT EFFECTS	:	Gas generated in drying or melting is irritating eyes and skins.
ACUTE TOXICITY(INCLUDING LD50)	:	No finding.
SUBACUTE TOXICITY	:	No finding.
CHRONIC TOXICITY	:	No finding.

CARCINOGENECITY	:	No finding.
MUTAGENECITY(Micro organisms,chromosomal aberration)	:	No finding.
REPRODUCTIVE TOXICITY	:	No finding.
TERATOGENICITY	:	No finding.
OTHERS(Including generation of hazardous gases by reaction with water,for ezample)	:	No finding in this report means that there will be no hazard in general,but no proving data available at the time of reporting.
OTHER CAUTIONS	:	With regard to dust,the maximum permissible concentration and limits are fixed by OSHA and ACGIH.

12. ECOLOGICAL INFORMATION

BIODEGRADABILITY	:	No finding.
BIOACCUMULATION	:	No finding.
FISH TOXICITY	:	No finding.

13. DISPOSAL CONSIDERATION

WASTE FROM RESIDUES	:	This is designated as waste plastics among industrial wastes by the Wastes Disposal Law. Disposal waste pellets through licensed wastes handlers or local autonomous bodies if they are handling wastes disposal.
WASTE FROM RESIDUES 2	:	When disposed by incineration,use the well controlled incinerators in accordance with the Wastes Disposal Law,Air Pollution Control Law and Water Pollution Prevention Law.

14. TRANSPORT CONSIDERATION

UN CLASSIFICATION NUMBER	:	Not applicable
OTHER CAUSIONS	:	Handle with care so as not to give damages to containers or not to be subjected to wetting.
OTHER CAUSIONS 2	:	Secure the containers firmly so as not to cause collapsing.

15. REGULATORY INFORMATION

WASTE DISPOSAL LAW	:	Waste plastics among industrial wastes.

16. OTHER INFORMATION

HANDLING OF THE DETAILS GIVEN ABOVE	:	This MSDS is the English version translated from the Japanese MSDS which is prepared for domestic use. Details given above are based on references, information and data available at this moment, but no warranty can be made on exactness of these details. They are also prepared on the assumption that the product will be handled in a normal way. For special handling, adequate safety and environmental measures should be taken in respect to its applications. Our products are not specifically intended for implants for medical and dental applications, and therefore they are not recommended for such applications. "No finding" in this report means that there will be no hazard in general, but no proving data is available at the time of reporting.

To I-PEX Co.,Ltd

MATERIAL SAFETY DATA SHEET

MSDS FILE No. (KURAMI WORKS) : 05−1225 (based on Form OSHA-174)

IDENTITY (AS Used on Label and List)

Product Class : Phosphor Bronze Strip
Trade Name : JIS H3130 C5210R (Equivalent to ASTM B103 C52100)
CAS No. : Copper: 7440-50-8, Tin: 7440-31-5, Phosphor: 7723-14-0

Chemical Composition

	Content(wt-%)	CAS No.
Tin(Sn)	7. 0~9. 0	7440−31−5
Phosphor(P)	0. 03~0. 35	7723−14−0
Copper(Cu)	Balance	7440−50−8
Sn+P+Cu	99. 7≦	-

Section I

Manufacturer's Name
NIKKO METAL MANUFACTURING CO., LTD.
KURAMI WORKS

Address
3 Kurami Samukawa-cho
Kouza-gun Kanagawa prefecture
253-0101 JAPAN

Telephone Number for Information (Quality Assurance)
+81-467-75-7285

Facsimile Number for Information (Quality Assurance)
+81-467-74-6971

Date Prepared
May 24th, 2005

Signature of Person in Charge
Chihiro Izumi
IZUMI, Chihiro
Senior Technical Supervisor, Quality Assurance

Signature of Person Responsible
Hiroaki Watanabe
WATANABE, Hiroaki
Manager, Quality Assurance Section

Section II Hazardous Ingredients / Identity Information

Hazardous Components (Specific Chemical Identity : Names OSHA Pel ACGIH TLV

Nothing for ordinary service condition

Section III Physical / Chemical Characteristics

Boiling Point	2630 ℃ for Copper 2275 ℃ for Tin	Specific Gravity (H20 = 1)	8.80
Vapor Pressure (mmHg)	N/A	Melting Point	1025 deg. centi. for C5210 Phosphor Bronze
Vapor Density (Air = 1)	N/A	Evaporation Rate (Butyl Acetate = 1)	N/A

Solubility in Water
N/A

Appearance and Odor
Brown − Red (solid) : Odor − None

Section IV Fire and Explosion Hazard Data

Flash Point (Method Used)	Flammable Limits	LEL	UEL
N/A	N/A	N/A	N/A

Extinguishing Media
N/A (stable , nonflammable substance)

Special Fire Fighting Procedures
Not specified

Unusual Fire and Explosion Hazards
Metal products do not present fire or explosion hazards under normal conditions.

Section V Reactivity Data

Stability	Unstable		Conditions to Avoid
	Stable	×	

Incompatibility (Materials to Avoid)

Nothing

Hazardous Decomposition or Byproducts

Nothing

Hazardous Polymerization	May Occur		Conditions to Avoid
	Will Not Occur	×	

Section VI Health Hazard Data

Route(s) of Entry :	Inhalation ?	Skin ?	Ingestion ?
	N/A	N/A	N/A

Health Hazardous (Acute and Chronic)

N/A

Carcinogenicitry :	NTP ?	IARC Monographs ?	OSHA Regulated ?
	N/A	N/A	N/A

Signs and Symptoms of Exposure

N/A

Medical Conditions
Generally Aggravated by Exposure N/A

Emergency and First Aid Procedures

N/A

Section VII Precautions for State Handling and Use

Steps to Be Taken in Case Material Is Released or Spilled

N/A

Waste Disposal Method

Collect scrap for remelting.

Precautions to Be Taken in Handling and storing

For Handling

- Put safety gloves on to protect your hands from edges of coils which might cut your hands.
- Wear safety glasses when metal powders or chips are expected to be generated in the work.
- Put safety shoes on when handling heavy coils.

For Storing

- The environment of stocking area should be free from acid, alkali, chloride, sulfide and other corrosive chemicals to prevent from rusting or corrosion.

Other Precautions

No special requirements

Section VIII Control Measures

Respiratory Protection (Specify Type)

Wearing a mask be recommended in the work such as abrasion and buffing which generates metal powders or chips.

Ventilation	Local Exhaust	Special
	None	None
	Mechanical (General)	Other
	None	None

Protective Gloves

Put safety gloves on to protect your hands from edges of coils which might cut your hands.

Eye Protection

Wear safety glasses when metal powder is expected to be generated in the work.

Other Protective Clothing or Equipment

Put safety shoes on when handling heavy coils.

Work / Hygienic Practices

None

Influence to environments

Fish on toxicity : TLm 48 hr. on $CuSO_4$
Salmogairdeneri : 0.038 ~ 0.8 ppm
Oryzias Latipes : 2.1 ~ 24ppm

2005 . 2 .27

Material Safety Data Sheet

1. Manufacturer

- Company HARADA Metal Industry Co., Ltd.
- Address 10−18 Sasamekitamati, Toda, Saitama 335-0033, Japan

  TEL 048−422−1588

  FAX 048−449−6303
- Counter The domestic business department business primary and second section

  TEL 048−441−5115

  FAX 048−444−9104

  The domestic business department OSAKA service office

  TEL 06−531−8094

  FAX 06−531−8096

  The domestic business department NAGOYA service office

  TEL 052−821−9778

  FAX 052−822−7500

  The overseas business department export section

  TEL 048−441−5115

  FAX 048−444−9104
- Urgent place to contact

  The quality assurance department

  TEL 048−422−1588

  FAX 048−449−6303

2. Products

- Phosphor bronze plates and strips for springs
- Phosphor bronze plates and strips

3. Specification of the material

- The division of mixture or single product : Single product
- The chemical name : Copper alloy
- Chemical composition and content rate(wt.%)

Element	Percent					CAS No.
	C5210	C5212	C5191	C5102	C5111	
Copper	rem.	rem.	rem.	rem.	rem.	7440-50-8
Tin	7.0~9.0	7.0~9.0	5.5~7.0	4.5~5.5	3.5~4.5	7440-31-5
Phosphorus	0.03~0.35	0.03~0.35	0.03~0.35	0.03~0.35	0.03~0.35	7723-14-0
Lead	0.05 max	0.05 max	0.05 max	0.05 max	0.05 max	7439-92-1
Iron	0.1 max	0.1 max	0.1 max	0.1 max	0.1 max	7439-89-6
Zinc	0.2 max	0.2 max	0.2 max	0.2 max	0.2 max	7440-66-6

4. Classification of harmfulness

- The name of classification : Not classified into the dangerous harmfulness material.
- The danger : No knowledge
- The harmfulness : No knowledge
- The effect for the environment : No knowledge

5. First aid

- Eyes : Flush the water. Consult the doctor, when the simulation of the eye continues.
- Skin : Flush the water.
- Inhalation : Consult the doctor, when it was large inhaled.

6. The treatment in the fire

- Nonflammable.

7. Leakage

- Not applied (because of solid)

8. Attention in handling and storage

- Stored at the ordinary—temperature and usual humidity.
- Prohibition of the rapid temperature and humidity change.

9. Treatment on the exposure prevention

- Standard control concentration : Not regulated.
- Allowable temperature : Not regulated.
- Facility countermeasure : The whole ventilation is desirable.
- Protector : For lung ,the wear of protection mask is desirable for the power handling.
  For hand ,the wear of protective glove is desirable.
  For eyes ,the wear of safety goggles is desirable for the power handling.
  For body , the wear of protective clothing is desirable.

10. Physical and chemical characteristic

- Appearance and smell : The solid with the metallic luster. Odoless.
- Boiling point : The indistinctness.
- Solubility : Dissolves in the inorganic acid.

	C5210	C5212	C5191	C5102	C5111
Specific gravity	8.82	8.82	8.85	8.88	8.90
Melting point	1020℃	1020℃	1045℃	1050℃	1060℃

11. Information for danger

- Fire point : The indistinctness.
- Stability : Show the stability at room temperature and in the air.
- The situation to be avoided : —

12. Information for harmfulness

- The powder stimulates eyes , skin and bronchi.
- Produce the ulcer and the hepatic disorder rarely.

13. Information for environment

- No knowledge.

14. Attention for scrapping

- Possible to deal with ,as an industrial waste.

15. Attention for transportation

- No damage transportation is desirable.

16. Applying act

- —