PULSE
PERFORMANCE
PRODUCTS

NOTE: CAN BE USED AS A KICK SCOOTER OR, BY PRESSING THE THUMB THROTTLE, ELECTRIC POWER WILL ENGAGE THE MOTOR FOR ADDED POWER AND ACCELERATION. YOUR RIDE TIME WILL VARY GREATLY DEPENDING ON THE AMOUNT OF POWER-ASSISTED RIDING PERFORMED.

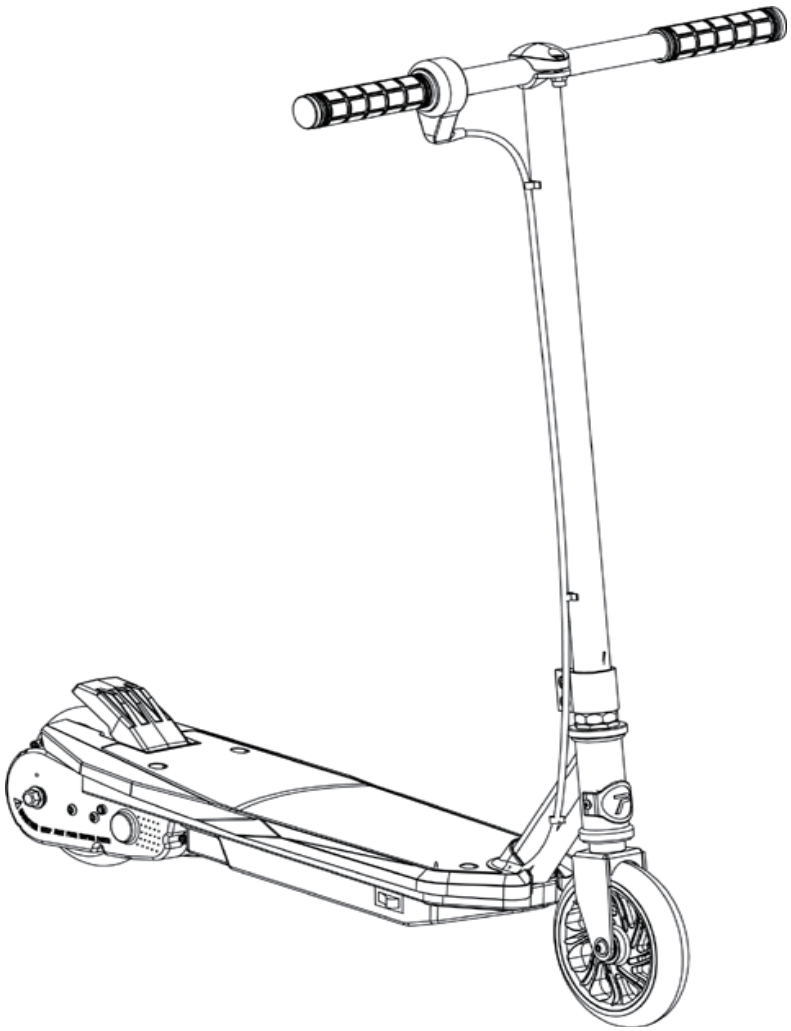

ELECTRIC SCOOTER OWNER'S MANUAL

FOR USE WITH THE FOLLOWING PULSE PERFORMANCE PRODUCTS™ SCOOTERS

- **FREEWHEEL 200s (with integrated Bluetooth™ Speaker)**

DO NOT RETURN TO STORE! QUESTIONS OR COMMENTS?
CALL (866)-434-6067

NOTE: Manual illustrations are for reference purposes only. Illustrations may not reflect the exact appearance of the actual product. Specifications are subject to change without notice.

BC

07.30.19

Table of Contents

Safety and Warnings	2-3
Before You Start	4
Assembly	5-6
FCC Information - Battery Charger	6
Hardware Maintenance	7
Before You Ride	7
Speaker Pairing and Use	8
Repair and Maintenance	8-10
Troubleshooting	11
Scooter Components	12
Warranty	13
FCC Information - Bluetooth™ Speaker	13

Safety and Warnings

⚠WARNING: Riding an electric scooter can be a dangerous activity. Certain conditions may cause components to fail without fault of the manufacturer. Scooter can and is intended to move and it is therefore possible to lose control, fall off and/or get into dangerous situations that no amount of care, instruction or expertise can eliminate. If such a thing does occur you can become seriously injured or die, even when using safety equipment and other safety precautions. RIDE AT YOUR OWN RISK AND ALWAYS USE COMMON SENSE. To reduce the risk of injury, ADULT SUPERVISION IS REQUIRED.

This manual contains many warnings and cautions concerning the consequences of failing to inspect, maintain or properly use your electric scooter. Since any incident can result in serious injury or even death, we do not repeat the warning of possible serious injury or death each time such a possibility is mentioned in this manual.

APPROPRIATE RIDING ATTIRE

Always wear proper protective equipment such as:

- Approved safety helmet. (Helmet may be legally required by local law or regulation in your area.)
- Elbow pads and knees pads
- Long sleeved shirt, long pants
- Gloves
- Lace up, closed toe shoes with rubber soles, never ride barefooted or in sandals, and ensure that shoelaces are tied and kept out of the way of the wheels and drive system.

RIDER USE AND PARENTAL SUPERVISION

RIDER MUST NOT EXCEED THE WEIGHT LIMIT OF 120 pounds (54kgs). Rider weight does not always mean a person's size is appropriate to fit or maintain control of the scooter. To reduce the risk of injury, ADULT SUPERVISION IS REQUIRED.

This manual contains extremely important safety information. It is your responsibility to completely review this information and make sure that all riders understand all warnings, cautions, instructions and safety topics and assure that all riders are able to safely and responsibly use this scooter. Pulse Performance Products™ advises that you periodically review and reinforce all information in this manual with all riders, and that you inspect and maintain your scooter to insure their safety.

The recommended rider age is 8 to 12 yrs. Any rider that is unable to fit comfortably on the scooter should never attempt to ride it. A parent's decision to allow their child to use the scooter should be based on the child's maturity, skill level and their ability to follow rules.

Never use in roadways, near motor vehicles, on or near steep inclines or steps, swimming pools or other bodies of water.

Do not touch the motor or brakes on the scooter when in use or directly after use as these parts can become extremely hot.

Keep this scooter away from small children and remember that it is intended for use only by persons who are, at a minimum, completely competent and comfortable while operating this product.

RIDING PRACTICES AND CONDITIONS

Check and obey any local laws or regulations which may affect the locations where the electric scooter may be used.

Always ride defensively. Watch out for obstacles that could catch your wheel or force you to turn suddenly or lose control. Be careful to avoid pedestrians, other wheeled products (such as skaters, skateboards, scooters, bikes, etc.), children or animals who may enter your path. Always respect the rights and property of others.

Do not depress the thumb button on the hand grip unless you are on the scooter and in a safe, outdoor environment that is suitable for riding.

Do not attempt or perform racing, stunt riding, tricks, or other manuevers, which may cause loss of conrtrol, or may cause uncontrolled operator actions or reactions. This product is not made to withstand abuse from jumping, curb grinding or other dangerous riding activities.

Safety and Warnings

⚠WARNING:

FAILURE TO HEED TO THE WARNINGS LISTED BELOW INCREASES RISK OF POTENTIAL SERIOUS INJURY. USE THE APPROPRIATE CAUTION WHEN RIDING AND ALWAYS WEAR PROTECTIVE GEAR.

Maintain a hold with both hands on the handlebars at all times.

Never allow more than one person at a time to ride the scooter.

Never use on roadways, near motor vehicles, on or near steep inclines or steps, swimming pools or other bodies of water.

Avoid sharp bumps, drainage grates, and sudden surface changes.

Do not allow your hands, feet, hair, body parts, clothing or similar articles to come in contact with moving parts, wheels, or drivetrain, while the motor is running.

Never ride while using a cell phone or wearing headphones.

Never hitch on to or with another vehicle or pull anyone or anything.

Never immerse the scooter in water; electrical and drive components could be damaged by water or create other possible unsafe conditions.

Ride only on flat, dry surfaces such as pavement or level ground without loose debris, such as sand, leaves, rocks or gravel. Water, mud, ice, bumpy, uneven, slick, or rough surfaces could impair traction and contribute to possible loss of control. Avoid excessive speeds that can occur from downhill rides which could cause loss of control.

Do not ride at night or in areas of limited visibility. Owners are encouraged to highlight (for conspicuity) using lighting, reflectors, and for low-riding units, signal flags on flexible poles

Do not ride indoors or on surfaces that could become damaged such as carpet or flooring.

Before each cycle of operation, the operator shall perform the preoperational checks specified by the manufacturer; that all guards and pads originally supplied by the manufacturer are in proper place and in serviceable condition. That any and all axle guards, chain guards, or other covers or guards supplied by the manufacturer are in place and in serviceable condition.

Ensure that the area that the unit is to be operated in is safe and suitable for safe operating.

Ensure that all safety labels are in place and understood by the operator.

Persons with the following conditions shall be cautioned not to operate: Those with heart conditions, pregnant women, persons with head, back, or neck ailments, or prior surgeries to those areas of the body. Persons with any mental or physical conditions that may make them susceptible to injury or impair their physical dexterity or mental capabilities to recognize, understand, and perform all of the safety instructions and to be able to assume the hazards inherent in unit use.

Maximum operating speed is 8 MPH (13 KM/H).

Before each ride the following checks will need to be performed to the scooter:

- That all components are properly secured and are functioning according to manufactures specifications.
- Ensure that the brake system is functioning properly.
- Components shall be maintained and repaired in accordance with the manufacturers authorized replacement parts with installation performed by dealers or other skilled individuals.

BATTERIES, FUSES, CIRCUIT BREAKERS & USING THE BATTERY CHARGER

The battery charger should be regularly examined for damage to the cord, plug, enclosure and other parts. In the event of such damage, if any is found, the scooter should not be charged until the battery charger has been repaired or replaced.

Use only with the supplied, recommended battery charger.

Always use caution when charging.

The battery charger is not a toy and should be operated by an adult.

Disconnect the battery charger and unplug from scooter when not in use.

Never operate battery charger near flammable materials or liquids.

Do not exceed recommended charging time.

Always disconnect the battery charger from the scooter prior to wiping down and cleaning with any liquid.

Do not mix old and new batteries. Do not mix alkaline, standard (carbon-zinc), or rechargeable batteries.

Only use the batteries specified by the manufacturer.

RISK OF FIRE. Do not bypass fuse or circuit breaker. The circuit breaker on this scooter is not replaceable by the user - it is an integral part of the controller. Replace the controller only with an identical part as specified by the manufacturer.

⚠WARNING:

FAILURE TO HEED TO THE WARNINGS LISTED ABOVE INCREASES RISK OF POTENTIAL SERIOUS INJURY. USE THE APPROPRIATE CAUTION WHEN RIDING AND ALWAYS WEAR PROTECTIVE GEAR.

Before You Start

⚠WARNING: Remove all packing and items from the display box. Make sure that the power switch is turned "OFF" before assembling the scooter.

Estimated Assembly Time

- Allow up to 25 minutes for assembly, not including initial charge time.
- Allow up to 12 hours for the initial charge (see page 6 for charging information).

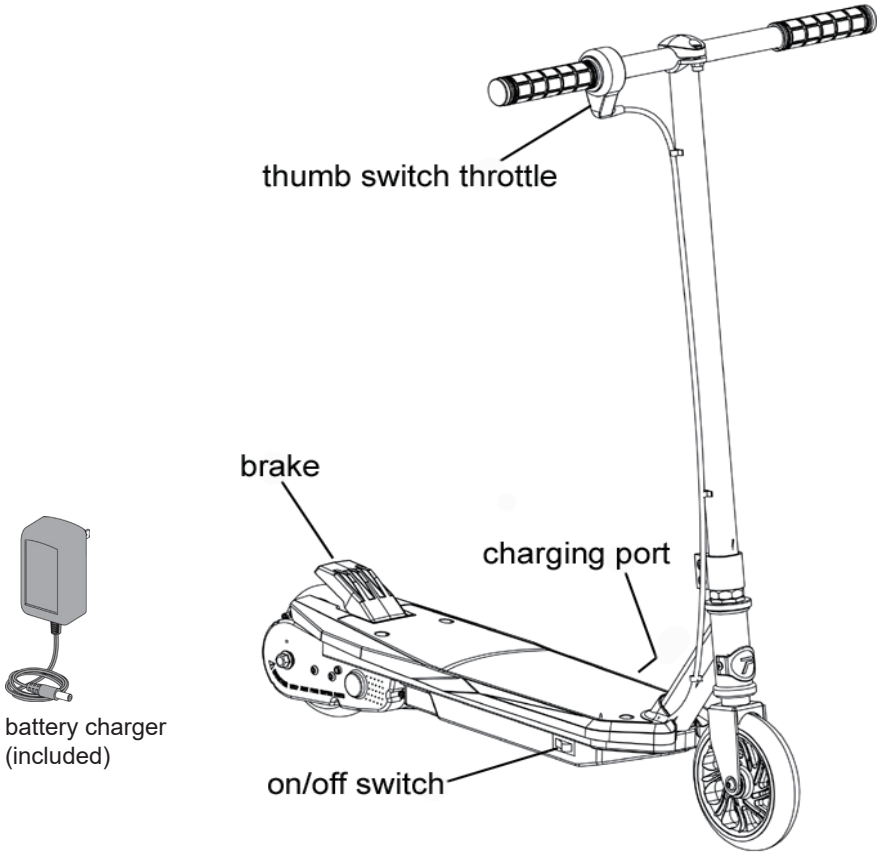

battery charger
(included)

NOTE: This scooter does not have a manual reset button or fuse. It is integrated into the controller and is self-resetting.

Required Tools

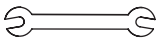

10 mm / 8 mm
wrench
(included)

two [2] 13 mm
wrenches
(not included)

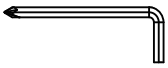

5 mm hex wrench with
philip screw driver (included)

second
5 mm hex wrench
(not included)

3 mm hex wrench
(not included)

⚠WARNING: DO NOT USE NON-PULSE PERFORMANCE PRODUCTS™ PRODUCTS WITH YOUR PULSE PERFORMANCE PRODUCTS™ ELECTRIC SCOOTER. This scooter has been built to specific Pulse Performance Products™ design specifications and should not be modified. Altering of the original components may or may not be compatible with the design and will void the warranty.

Assembly

Handlebar Steer Tube Assembly

Tools required: 5 mm hex wrench, 10 mm wrench

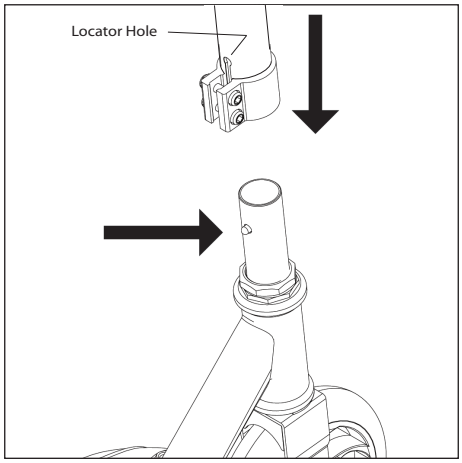

1. Depress the push button located on the rear of the fork tube and insert the handlebar steer tube onto the fork tube. The push button should align with the locator hole in the handlebar steer tube and lock the steer tube securely in place. Once the push button pops out of the locator hole, lift up on the steer tube to ensure it cannot slide off. If it cannot, then proceed to step 2.

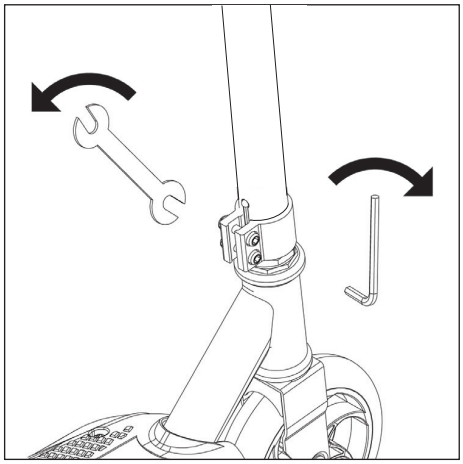

2. Tighten the bolts with the 5 mm hex wrench and 10 mm wrench. Tighten bolts evenly and securely.

3. Align handlebars (a) onto the stem tube cradle (b) and install handlebar clamp (c) ensuring that the clamp locating pin inserts into the Anti-Rotation Hole (hole should be facing upward). Install hardware and tighten both bolts and nutswith the 5mm hex wrench and 10mm wrench evenly and securely

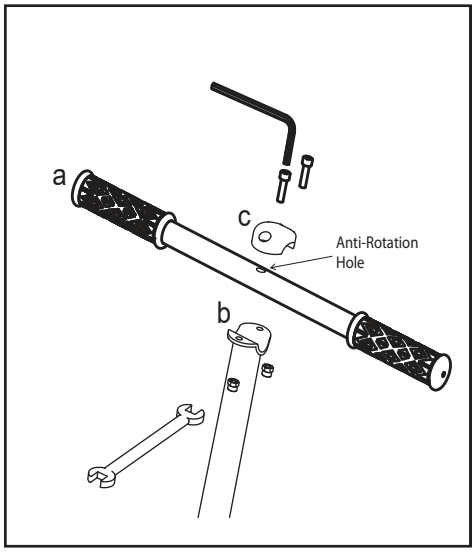

4. Locate the 3 small, black clips that are pre-installed on the trottle cable - they look like this >>> They slide easily along the cable, and are designed to be inserted into 1 hole on the scooter neck and 2 holes on the steering column, to keep the throttle cable located in a clean, safe position. Simply align each clip with its respective hole (as shown) and press it firmly into place. Do not remove clips from the cable before inserting.

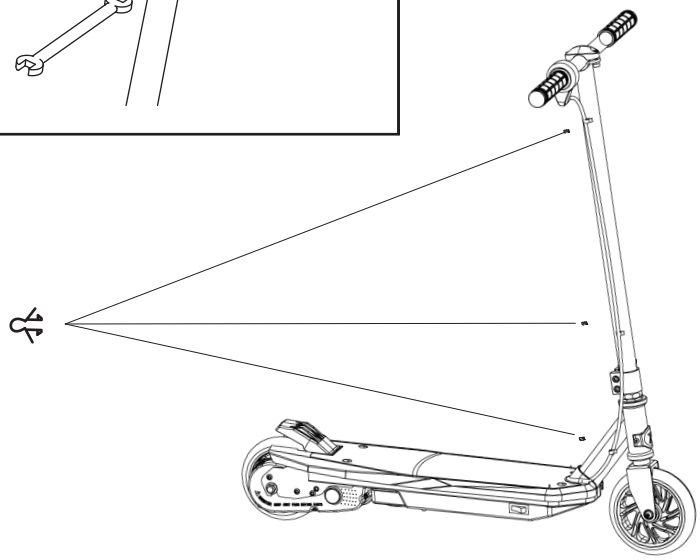

Assembly

Charging the Battery

⚠WARNING: Battery must be fully charged before you ride your electric scooter

Required components: battery charger

- Initial battery charge time - 12 hours
- Recharges after initial charge - up to 10 hours
- When scooter is not in regular use batteries need to be charged on a monthly basis to maximize performance

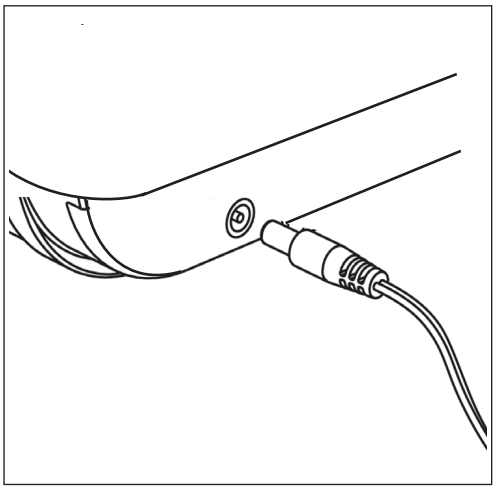

1. Make sure power switch is in the OFF position before plugging in the charger. Insert charger into charging port on the left side of the battery box.

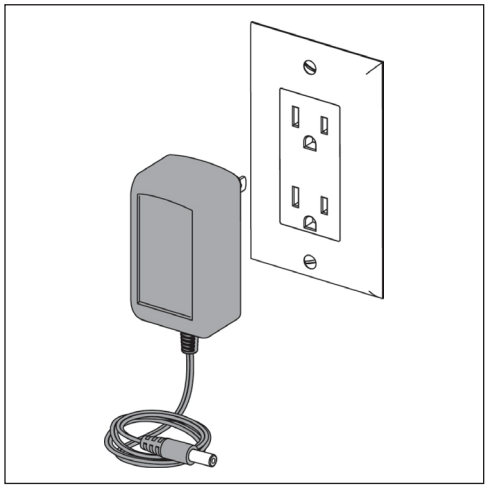

2. Plug the battery charger into a wall power outlet. The light on the charger housing should illuminate. Red LED light indicates battery is charging and a green LED light indicates battery is fully charged.

⚠WARNING: Any changes or modifications to this unit not expressly approved by the party responsible for compliance could void the user's authority to operate the equipment.

FCC instruction for Battery charger:
Please note that changes or modifications not expressly approved by the party responsible for compliance could void the user's authority to operate the equipment.

NOTE: This equipment has been tested and found to comply with the limits for a Class B digital device, pursuant to Part 15 of the FCC Rules. These limits are designed to provide reasonable protection against harmful interference in a residential installation. This equipment generates, uses, and can radiate radio frequency energy and, if not installed and used in accordance with the instructions, may cause harmful interference to radio communications. However, there is no guarantee that interference will not occur in a particular installation. If this equipment does cause harmful interference to radio or television reception, which can be determined by turning the equipment off and on, the user is encouraged to try to correct the interference by one or more of the following measures:

- Reorient or relocate the receiving antenna. --Increase the separation between the equipment and receiver.
- Connect the equipment into an outlet on a circuit different from that to which the receiver is connected.
- Consult the dealer or an experienced radio/TV technician for help.

⚠WARNING: Do not use this product for the first time until you have charged the battery for at least 12 hours. Failure to follow these instructions may damage your product and void your warranty.

Note: Do not store the battery in temperatures above 70˚F (21˚C) or below 32˚F (0˚C).

Note: The charger has a small window with one LED light that indicates the charge status. Refer to the illustration on the charger unit for the actual "charging" and "charged" status indication. Your charger may get warm during use; this is normal and is no cause for concern.

Note: Batteries must be recharged at least once a month even when the scooter is not in use. Failure to do so may result in batteries that will no longer accept a charge.

Hardware Maintenance

Brake
Check the brakes for proper function. When you step on the brake it should provide positive braking action. When you apply the brake with the speed control on, the brake cut off switch should stop the motor.

Frame, Fork, Handlebars & Hardware
Check for cracks or broken connections. Although broken frames are rare, it is possible for aggressive rider to accidentally run into a curb or wall and bend or break a frame. Make sure that all fasteners are properly tightened or adjusted. Get in the habit of inspecting your scooter on a regular basis.

Tires, Wheels & Hubs
Periodically inspect the wheels for excess wear.

Safety Gear
Always wear proper protective gear such as an approved safety helmet. Elbow pads and knee pads are recommended. Always wear athletic shoes (lace up shoes with rubber soles), never ride barefooted or in sandals, and keep shoelaces tied and out of the way of the wheels, motor and drive system.

Batteries
Make sure the power switch is turned off whenever the scooter is not in use. Never store the product in freezing or below freezing temperatures! Freezing will permanently damage the batteries.

Before You Ride

Before you ride always check and for the following:

Safety Gear
Always wear proper protective gear such as:
- Approved safety helmet. (Helmet may be legally required by local law or regulation in your area.)
- Elbow pads and knees pads
- Long sleeved shirt, long pants
- Gloves
- Lace up shoes with rubber soles.

Brake
Check the brakes for proper function. When brake is applied it should slow/stop the rear wheel without excessive effort. When you apply the brake with the throttle on, the brake cut off switch should stop the motor. Make sure that the brakes are not rubbing when the brake is not being applied. Do not ride the scooter if the brakes are not functioning properly. Do not touch the brake on the scooter when in use or directly after use as these parts can become extremely hot.

Throttle
Make sure before throttle is ever depressed, that you are in an open and safe area to ride, you are balanced on the scooter and have both hands on the handlebar controls. Push starting the scooter will greatly increase your ride time. We recommend using as a “PUSH” or “KICK” type scooter, and using the power button only when added power and acceleration are needed - doing so will also greatly increase your ride time.

Tires, Wheels & Hubs
Inspect the wheels for excess wear and replace if necessary.

Frame, Fork and Components
Always carefully inspect your scooter before you ride. Check for cracks, broken worn or loose components which should be repaired or replaced before you ride.
Make sure that all fasteners are properly tightened or adjusted. Get in the habit of inspecting your scooter on a regular basis.

Battery
Always make sure the power switch is in the “off” position whenever the scooter is not in use. Never store the product in freezing or below freezing temperatures. These low temperatures will permanently damage the battery.

⚠WARNING: Always ensure that you are in a safe open area to ride before you engage the throttle. Never depress the throttle button without being on the scooter in a balanced, ready to ride position with both hands on the handlebar controls.

Failure to follow these instructions may damage your scooter and void your warranty.

Bluetooth™ Speaker Pairing and Use - See WARNING BELOW

Pairing Speaker to Audio Device

⚠WARNING: NEVER ATTEMPT TO USE THE CONTROLS ON YOUR PAIRED DEVICE WHILE THE SCOOTER IS IN MOTION. ALWAYS COME TO A COMPLETE STOP IN A SAFE LOCATION BEFORE ADJUSTING VOLUME, CHANGING SONGS OR PERFORMING ANY FUNCTION ON YOUR DEVICE, REGARDLESS IF IT IS PAIRED TO THE SCOOTER'S SPEAKER OR NOT. THIS IS FOR YOUR OWN SAFETY AND THE SAFETY OF THOSE AROUND YOU. FAILURE TO FOLLOW THIS WARNING COULD LEAD TO LOSS OF CONTROL OF THE SCOOTER RESULTING IN SERIOUS INJURY OR DEATH.

Before you can use your scooter's Bluetooth™ speaker, you must pair it with your phone or other audio device by following these simple steps:

Step 1. Make sure your phone or audio device is on, and the Bluetooth™ function is enabled.

Step 2. Turn on your Freewheel 200s Scooter, and listen for the 8 tones, followed by the words "Bluetooth Mode".

Step 3. Your device should give you an option to PAIR with Bluetooth™ device FWBT200.

Step 4. Allow your device to PAIR. If successful, you will hear 2 confirmation tones that the device is now paired to your scooter's speaker.

Step 5. Use the controls on your device to listen to your favorite music as you cruise!

NOTE: After successfully pairing, your device will stay paired until you unpair it from the scooter's speaker. This allows you to simply turn the scooter on and off, without the need to follow the steps above again. And remember, if your device is already paired with another Bluetooth™ product, it will not connect/pair with your scooter's speaker until that product is turned off or unpaired.

Pairing Help

• Call (866) 434-6067 to speak with a customer service representative

Repair and Maintenance

Battery Charger

Only use the supplied battery charger. If battery charger is damaged discontinue use immediately and replace with a Pulse Performance Products™ recommended battery charger.

Wheels

Wheels and drive system components are subject to normal wear and tear. It is the responsibility of the user to regularly inspect wheels for excess wear and adjust and replace drive train components as required.

Replacement Parts

Most of the common replacement parts are available for purchase by calling (866) 434-6067.

Repair Help

• Call (866) 434-6067 to speak with a customer service representative

⚠WARNING: The brake is capable of locking up and skidding the rear wheel if not applied correctly. Always try and avoid skidding as this could cause you to lose control of the scooter and will cause damage to the rear tire. Practice using the brake in an unobstructed open area to become familiar with its function and until you can make smooth, controlled stops.

Rear Wheel-Transmission-Motor Assembly Replacement

Tools required: two [2] 13 mm wrenches, phillips screwdriver

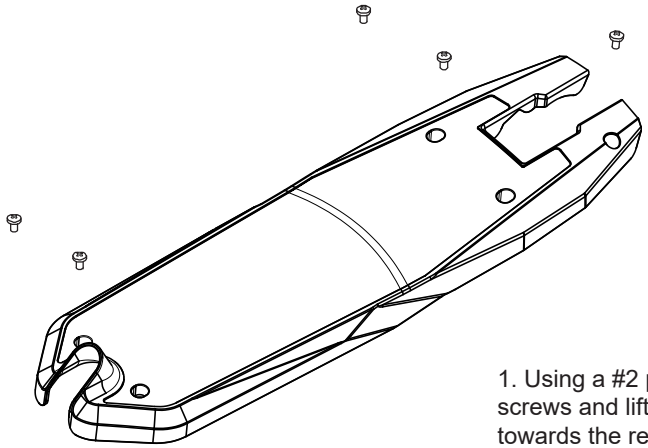

1. Using a #2 phillips screwdriver, remove the 5 deck screws and lift the deck away by shifting it up and towards the rear of the scooter, allowing the deck to slip off of the brake pedal. The brake pedal will not come off with the deck.

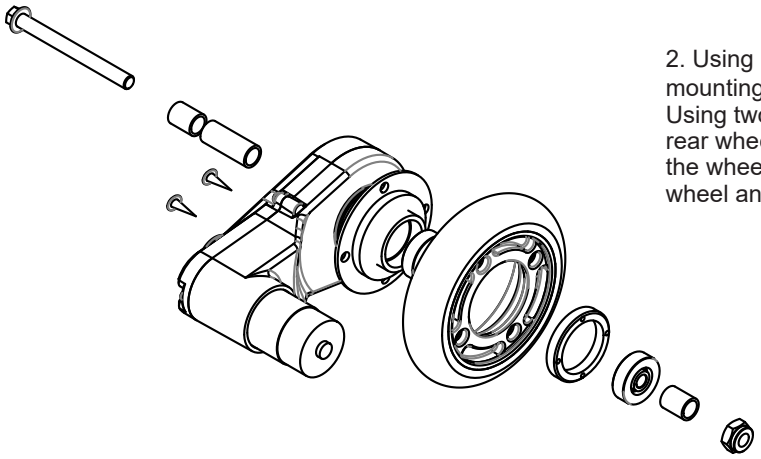

2. Using a #2 phillips screwdriver, remove the 2 side-transmission mounting screws from the frame.
Using two [2] 13 mm wrenches loosen the rear wheel axle nut and bolt. CAREFULLY remove the wheel AND transmission from the frame, with the wheel and motor remaining on the transmission.

3. Note the location of all rear wheel assembly hardware and ensure to properly re-install all items, including the deck and deck scrrews, tightly and securely.

Repair and Maintenance

Front Wheel Replacement

Tools required: Two 5mm hex wrenches

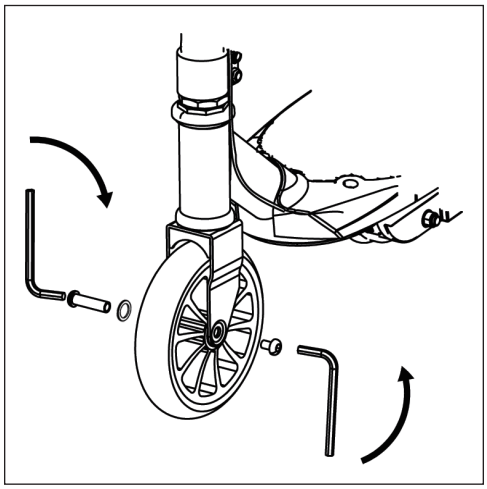

1. Using two 5 mm hex wrenches loosen and remove the front axle by turning the wrenches counter clockwise.

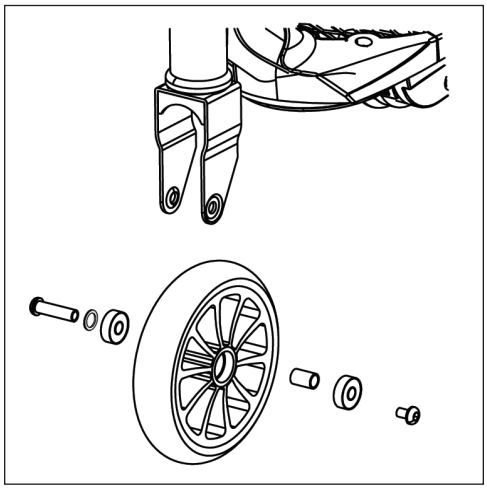

2. Reinstall new replacement wheel ensuring to note the order and location of all components.

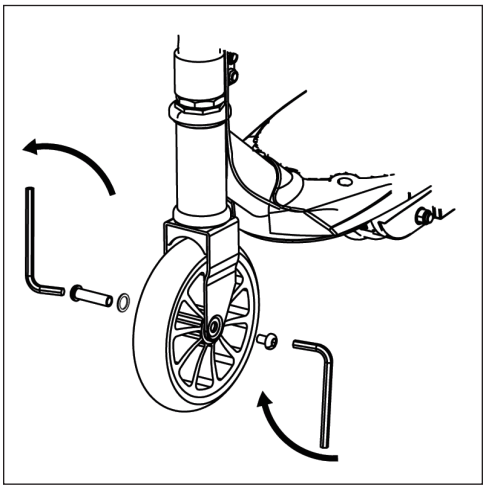

3. Reinstall hardware and tighten clockwise with a 5 mm hex wrench.

Battery Care and Disposal

Do not store the battery in temperatures above 70°F (21°C) or below 32°F (0°C).

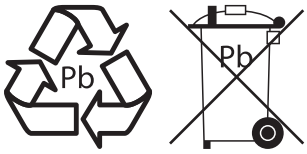

THIS SCOOTER CONTAINS SEALED LEAD ACID BATTERIES WHICH MUST BE RECYCLED IN ACCORDANCE TO YOUR LOCAL AND STATE LAWS. PLEASE CAREFULLY READ AND UNDERSTAND THE FOLLOWING DISPOSAL INSTRUCTIONS:

Disposal: This product contains sealed lead acid batteries which must be disposed or recycled in an environmentally safe manner. Do not dispose of the batteries in your household trash. Do not dispose of the batteries in a fire, this could cause the batteries to leak or explode. The incineration, disposal in landfill and or placing sealed lead acid batteries with household trash is prohibited by law in most areas. Return exhausted batteries to a state or federal approved lead acid battery recycler or check with your local retailer of vehicle batteries.

⚠WARNING: Make sure to wash your hands after handling batteries as they contain lead compounds.

⚠WARNING: Do not mix old and new batteries. Do not mix alkaline, standard (carbon-zinc), or rechargeable (nickel-cadmium) batteries.

Do not store the battery in temperatures above 70°F (21°C) or below 32°F (0°C).

Troubleshooting

Problem	Possible Cause	Solution
Scooter will not run.	Battery is not charged.	Fully charge the battery. First charge should be 12 hours and up to 10 hours for recharges.
	Wires or connectors are loose or unplugged.	Check to ensure that charger is tightly plugged into both the wall and the scooter.
Scooter run time is short.	Battery requires charging.	Fully charge the battery. First charge should be 12 hours and up to 10 hours for recharges. Check to ensure that battery charger is tightly plugged into both the wall and the scooter.
	Battery will not accept full charge.	Make sure power flow to the wall outlet is on. Battery may need to be replaced. Even with proper care, rechargeable batteries do not last forever. The average rechargeable battery life is 1 to 2 years depending on scooter conditions and use. Replace only with Pulse Performance Products™ replacement batteries.
	Rider weight exceeds limit or terrain is too steep or rough	Limit use to riders under the maximum weight limit and ride only on solid, flat and dry surfaces such as pavement or level ground.
Scooter suddenly stops working.	Circuit breaker has tripped.	The self-resetting circuit breaker (located inside the controller - not a user serviceable part) will automatically trip and turn off the power if the motor is overloaded. Allow up to a full minute for it to reset. An excessive overload (steep incline or excessive rider weight) could have caused the motor to overheat and trip the breaker. Avoid repeatedly tripping the breaker, as this can damage the controller. Check all wires and connectors to make sure they are connected and tight.
Scooter runs sluggishly.	Scooter is overloaded.	Make sure you do not overload the scooter by exceeding the 120 lb (54 kg) maximum weight limit, going up steep inclines, or towing objects behind the scooter. Avoid overloading the scooter as this will prematurely wear out the batteries, motor and componentry.
	Unsuitable riding conditions.	Ride only on solid, flat, clean and dry surfaces such as pavement or level ground.
Speaker will not connect or play music	Not properly paired to device	Make sure that you have followed the pairing instructions on page 8
	Not connected to audio device	Make sure that your device is not already connected to another speaker.
	Scooter not turned on or battery charge level too low	Make sure that your scooter is fully charged

Scooter Components

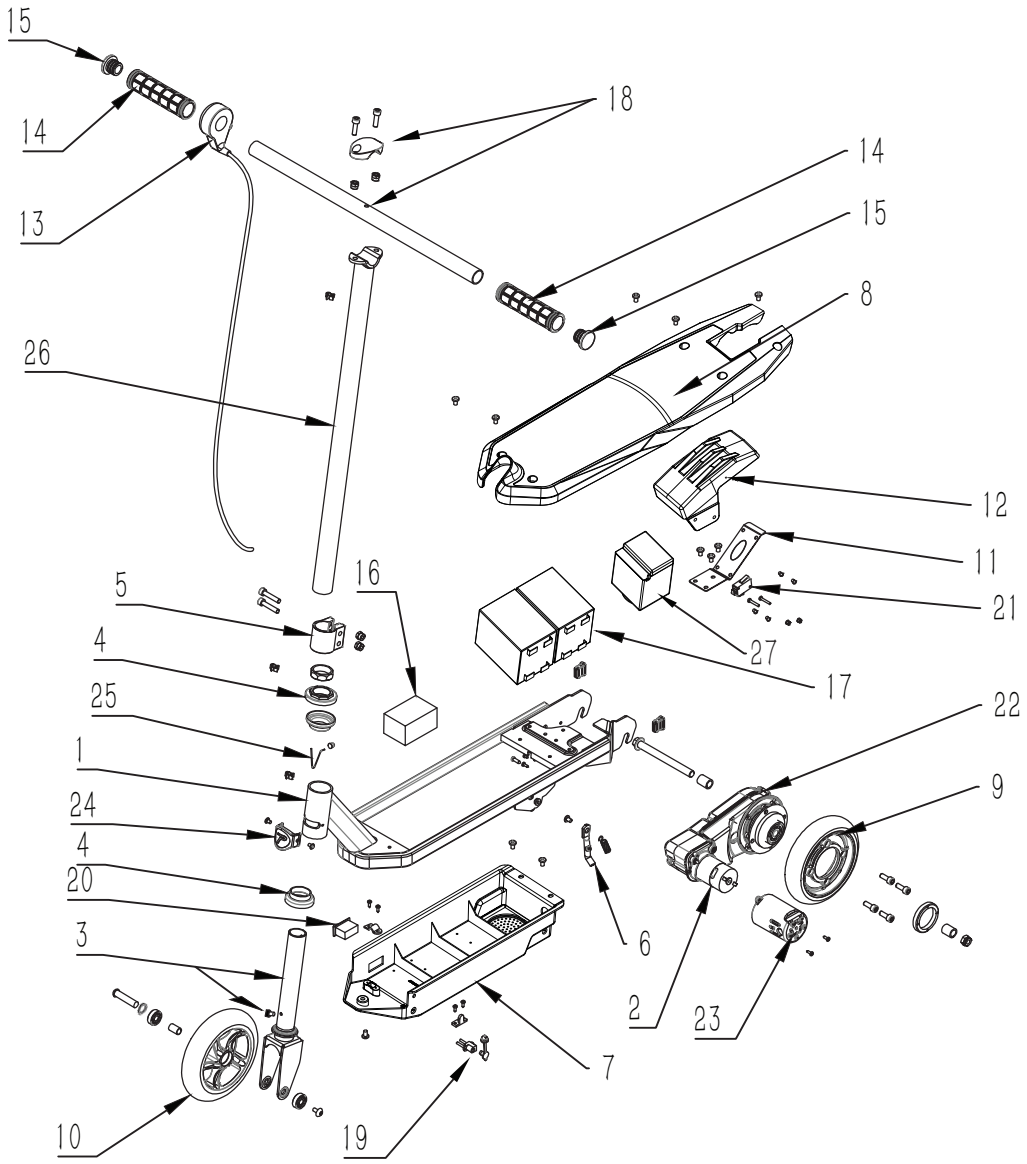

PART DESCRIPTION

1. Frame
2. Motor
3. Front Fork & Rotation Limit Screw
4. Headset (Upper & Lower)
5. Clamp
6. Kickstand
7. Battery Box
8. Deck
9. Rear Wheel
10. Front Wheel
11. Spring Plate
12. Foot Brake
13. Thumb Throttle
14. Grip
15. Grip End Plug
16. Controller
17. Batteries
18. Handlebar & Clamp
19. Charger Port & Dust Cover
20. On/Off Switch
21. Brake Cut-Off Switch
22. Transmission
23. Motor Cover
24. Steering Limit Cover
25. Spring Button
26. Steering tube
27. Bluetooth speaker

Warranty

Limited Warranty

The manufacturer warranties this product to be free of manufacturing defects for a period of 90 days from the date of purchase. This Limited Warranty does not cover normal wear and tear, tires, cables, or any damage, failure or loss caused by improper assembly, maintenance, storage or use of this Pulse Performance Products™ electric scooter. This warranty is limited to the replacement of defective parts only.

This Limited Warranty will be void if the product is ever
- used in a manner other than for recreation or transportation
- modified in any way
- used as a rental

The manufacturer is not liable for incidental or consequential loss or damage due directly or indirectly to the use of this product.

Pulse Performance Products™ does not offer an extended warranty. If you have purchased an extended warranty, it must be honored by the store at which the scooter was purchased from.

For your records, keep your original sales receipt with this manual.

SB 1918 (CALIFORNIA) DECLARATION
YOUR INSURANCE POLICIES MAY NOT PROVIDE ANY COVERAGE FOR ACCIDENTS INVOLVING THE USE OF THIS SCOOTER. TO DETERMINE IF ANY COVERAGE IS PROVIDE CONTACT YOUR INSURANCE COMPANY OR INSURANCE AGENT.

FCC Information - Bluetooth™ Speaker System

FCC Warning Information - Bluetooth™ Speaker System

Any Changes or modifications not expressly approved by the party responsible for compliance could void the user's authority to operate the equipment. This device complies with part 15 of the FCC Rules. Operation is subject to the following two conditions:
(1) This device may not cause harmful interference, and
(2) this device must accept any interference received, including interference that may cause undesired operation.

NOTE: This equipment has been tested and found to comply with the limits for a Class B digital device, pursuant to part 15 of the FCC Rules. These limits are designed to provide reasonable protection against harmful interference in a residential installation.
This equipment generates, uses and can radiate radio frequency energy and, if not installed and used in accordance with the instructions, may cause harmful interference to radio communications. However, there is no guarantee that interference will not occur in a particular installation. If this equipment does cause harmful interference to radio or television reception, which can be determined by turning the equipment off and on, the user is encouraged to try to correct the interference by one or more of the following measures:
—Reorient or relocate the receiving antenna.
—Increase the separation between the equipment and receiver.
—Connect the equipment into an outlet on a circuit different from that to which the receiver is connected.
—Consult the dealer or an experienced radio/TV technician for help.
This equipment complies with FCC radiation exposure limits set forth for an uncontrolled environment.
This transmitter must not be co-located or operating in conjunction with any other antenna or transmitter.

PULSE
PERFORMANCE
PRODUCTS

facebook.com/pulseperfprod

twitter.com/pulseperfprod

Pulse Performance Products™

A Division of Bravo Sports™
12801 Carmenita Rd.
Santa Fe Springs, CA 90670

© 2019 - 2020 Pulse Performance Products™ - All Rights Reserved