# FCC 47 CFR PART 15 SUBPART C

# CERTIFICATION TEST REPORT

*For*

Nero One Automation Gateway

MODEL No.: N1-GW03-UN-LTE, N1-GW03-UN

FCC ID: 2AU2VN1GW03

Trade Mark: Nero One, FAMTEM, OOMI by Fantem

REPORT NO.: ES190826014W03

ISSUE DATE: October 14, 2019

*Prepared for*

Blue Sky Technology Group Pty. Ltd.

50 Ricketts Road, Mount Waverley Victoria 3149, Australia

*Prepared by*

SHENZHEN EMTEK CO., LTD

Bldg 69, Majialong Industry Zone, Nanshan District,
Shenzhen, Guangdong, China
TEL: 86-755-26954280
FAX: 86-755-26954282

# TABLE OF CONTENTS

**1 TEST RESULT CERTIFICATION ..... 3**

**2 EUT TECHNICAL DESCRIPTION ..... 4**

**3 SUMMARY OF TEST RESULT ..... 5**

**4 TEST METHODOLOGY ..... 6**

4.1 GENERAL DESCRIPTION OF APPLIED STANDARDS ..... 6
4.2 MEASUREMENT EQUIPMENT USED ..... 6
4.3 DESCRIPTION OF TEST MODES ..... 7

**5 FACILITIES AND ACCREDITATIONS ..... 8**

5.1 FACILITIES ..... 8
5.2 LABORATORY ACCREDITATIONS AND LISTINGS ..... 8

**6 TEST SYSTEM UNCERTAINTY ..... 9**

**7 SETUP OF EQUIPMENT UNDER TEST ..... 10**

7.1 RADIO FREQUENCY TEST SETUP 1 ..... 10
7.2 RADIO FREQUENCY TEST SETUP 2 ..... 10
7.3 CONDUCTED EMISSION TEST SETUP ..... 12
7.4 BLOCK DIAGRAM CONFIGURATION OF TEST SYSTEM ..... 13
7.5 SUPPORT EQUIPMENT ..... 13

**8 TEST REQUIREMENTS ..... 14**

8.1 DTS (6DB) BANDWIDTH ..... 14
8.2 MAXIMUM PEAK CONDUCTED OUTPUT POWER ..... 17
8.3 MAXIMUM POWER SPECTRAL DENSITY ..... 18
8.4 UNWANTED EMISSIONS IN NON-RESTRICTED FREQUENCY BANDS ..... 21
8.5 RADIATED SPURIOUS EMISSION ..... 27
8.6 CONDUCTED EMISSIONS TEST ..... 39
8.7 ANTENNA APPLICATION ..... 42

# 1 TEST RESULT CERTIFICATION

| | | |
|---|---|---|
| Applicant | : | Blue Sky Technology Group Pty. Ltd. |
| Address : | | 50 Ricketts Road, Mount Waverley Victoria 3149, Australia |
| Manufacturer | : | Fantem Technologies (Shenzhen) Co.,Ltd |
| Address : | | 5th Floor, Yingtang Building, South 5th Road, HI-tech Park, Nanshan District, Shenzhen, Guangdong, China |
| EUT | : | Nero One Automation Gateway |
| Model Name | : | N1-GW03-UN-LTE, N1-GW03-UN |
| Trademark | : | Nero One, FAMTEM, OOMI by Fantem |

Measurement Procedure Used:

| APPLICABLE STANDARDS | |
|---|---|
| **STANDARD** | **TEST RESULT** |
| FCC 47 CFR Part 2, Subpart J<br>FCC 47 CFR Part 15, Subpart C | PASS |

The above equipment was tested by SHENZHEN EMTEK CO., LTD. The test data, data evaluation, test procedures, and equipment configurations shown in this report were made in accordance with the procedures given in ANSI C63.4 (2014) and the energy emitted by the sample EUT tested as described in this report is in compliance with the requirements of FCC Rules Part 2 and Part 15.247

The test results of this report relate only to the tested sample identified in this report.

Date of Test : August 26, 2019 to October 09, 2019

Prepared by : Sandor wu /Editor

Reviewer : Joe Xia/Editor

Approve & Authorized Signer : Lisa Wang/Manager

## 2 EUT TECHNICAL DESCRIPTION

| Characteristics | Description |
|---|---|
| **Product:** | Nero One Automation Gateway |
| **Model Number:** | N1-GW03-UN-LTE, N1-GW03-UN<br>(Note: The difference between the two models is that N1-GW03-UN-LTE adds a LTE module and a battery to N1-GW03-UN, We prepare N1-GW03-UN-LTE for test) |
| **Device Type:** | 2.4G ISM Band |
| **Standards:** | IEEE802.15.4 |
| **Modulation:** | O-QPSK |
| **Operating Frequency Range(s):** | 2405-2480 MHz |
| **Number of Channels:** | 16 Channels |
| **Channel Separation:** | 5 MHz |
| **Transmit Power Max:** | 7.959 dBm |
| **Antenna Type :** | FPC Antenna |
| **Antenna Gain:** | 3.35 dBi |
| **Power supply:** | ☒DC 5V from Adapter |
| | ☒Adapter:<br>Model: SAW12-050-2000UD<br>Input: AC 100-240V, 50/60Hz, 0.3A<br>Output: DC 5V, 2A |

***Note:*** *for more details, please refer to the User's manual of the EUT.*

# 3 SUMMARY OF TEST RESULT

| FCC Part Clause | Test Parameter | Verdict | Remark |
|---|---|---|---|
| 15.247(a)(2) | DTS (6dB) Bandwidth | PASS | |
| 15.247(b)(3) | Maximum Peak Conducted Output Power | PASS | |
| 15.247(e) | Maximum Power Spectral Density Level | PASS | |
| 15.247(d) | Unwanted Emission Into Non-Restricted Frequency Bands | PASS | |
| 15.247(d)<br>15.209 | Unwanted Emission Into Restricted Frequency Bands (conducted) | PASS | |
| 15.247(d)<br>15.209 | Radiated Spurious Emission | PASS | |
| 15.207 | Conducted Emission Test | PASS | |
| 15.247(b) | Antenna Application | PASS | |
| | | | |

NOTE1: N/A (Not Applicable)
NOTE2: According to FCC OET KDB 558074, the report use radiated measurements in the restricted frequency bands. In addition, the radiated test is also performed to ensure the emissions emanating from the device cabinet also comply with the applicable limits.

RELATED SUBMITTAL(S) / GRANT(S):

This submittal(s) (test report) is intended for FCC ID: 2AU2VN1GW03 filing to comply with Section 15.247 of the FCC Part 15, Subpart C Rules.
The system is compliance with Subpart B is authorized under a DOC procedure

# 4 TEST METHODOLOGY

## 4.1 GENERAL DESCRIPTION OF APPLIED STANDARDS

According to its specifications, the EUT must comply with the requirements of the following standards:
FCC 47 CFR Part 2, Subpart J
FCC 47 CFR Part 15, Subpart C
FCC KDB 558074 D01 DTS Meas Guidance V05r02

## 4.2 MEASUREMENT EQUIPMENT USED

Conducted Emission Test Equipment

| EQUIPMENT TYPE | MFR | MODEL NUMBER | SERIAL NUMBER | LAST CAL. | DUE CAL. |
|---|---|---|---|---|---|
| Test Receiver | Rohde & Schwarz | ESCS30 | 828985/018 | 05/18/2019 | 05/17/2020 |
| L.I.S.N. | Schwarzbeck | NNLK8129 | 8129203 | 05/18/2019 | 05/17/2020 |
| 50Ω Coaxial Switch | Anritsu | MP59B | M20531 | 05/18/2019 | 05/17/2020 |
| Pulse Limiter | Rohde & Schwarz | ESH3-Z2 | 100006 | 05/19/2019 | 05/18/2020 |
| Voltage Probe | Rohde & Schwarz | TK9416 | N/A | 05/19/2019 | 05/18/2020 |
| I.S.N | Rohde & Schwarz | ENY22 | 1109.9508.02 | 05/19/2019 | 05/18/2020 |

Radiated Emission Test Equipment

| EQUIPMENT TYPE | MFR | MODEL NUMBER | SERIAL NUMBER | LAST CAL. | DUE CAL. |
|---|---|---|---|---|---|
| EMI Test Receiver | Rohde & Schwarz | ESU | 1302.6005.26 | 05/19/2019 | 05/18/2020 |
| Pre-Amplifier | HP | 8447D | 2944A07999 | 05/19/2019 | 05/18/2020 |
| Bilog Antenna | Schwarzbeck | VULB9163 | 142 | 05/18/2019 | 05/17/2020 |
| Loop Antenna | ARA | PLA-1030/B | 1029 | 05/18/2019 | 05/17/2020 |
| Horn Antenna | Schwarzbeck | BBHA 9170 | BBHA9170399 | 05/18/2019 | 05/17/2020 |
| Horn Antenna | Schwarzbeck | BBHA 9120 | D143 | 05/18/2019 | 05/17/2020 |
| Cable | Schwarzbeck | AK9513 | ACRX1 | 05/18/2019 | 05/17/2020 |
| Cable | Rosenberger | N/A | FP2RX2 | 05/19/2019 | 05/18/2020 |
| Cable | Schwarzbeck | AK9513 | CRPX1 | 05/19/2019 | 05/18/2020 |
| Cable | Schwarzbeck | AK9513 | CRRX2 | 05/19/2019 | 05/18/2020 |

Radio Frequency Test Equipment

| EQUIPMENT TYPE | MFR | MODEL NUMBER | SERIAL NUMBER | LAST CAL. | DUE CAL. |
|---|---|---|---|---|---|
| Spectrum Analyzer | Agilent | E4407B | 88156318 | 05/19/2019 | 05/18/2020 |
| Signal Analyzer | Agilent | N9010A | My53470879 | 05/19/2019 | 05/18/2020 |
| Power meter | Anritsu | ML2495A | 0824006 | 05/18/2019 | 05/17/2020 |
| Power sensor | Anritsu | MA2411B | 0738172 | 05/18/2019 | 05/17/2020 |
| Spectrum Analyzer | Rohde & Schwarz | FSV40 | 100967 | 05/18/2019 | 05/17/2020 |

***Remark:*** *Each piece of equipment is scheduled for calibration once a year.*

## 4.3 DESCRIPTION OF TEST MODES

The EUT has been tested under its typical operating condition.
The EUT configuration for testing is installed on RF field strength measurement to meet the Commissions requirement and operating in a manner which intends to maximize its emission characteristics in a continuous normal application.

The Transmitter was operated in the normal operating mode. The TX frequency was fixed which was for the purpose of the measurements.

Test of channel included the lowest and middle and highest frequency to perform the test, then record on this report.

Pre-defined engineering program for regulatory testing used to control the EUT for staying in continuous transmitting and receiving mode is programmed.

☒Frequency and Channel list:

| Channel | Frequency (MHz) | Channel | Frequency (MHz) | Channel | Frequency (MHz) |
|---|---|---|---|---|---|
| 1 | 2405 | 7 | 2435 | 13 | 2465 |
| 2 | 2410 | 8 | 2440 | 14 | 2470 |
| 3 | 2415 | 9 | 2445 | 15 | 2475 |
| 4 | 2420 | 10 | 2450 | 16 | 2480 |
| 5 | 2425 | 11 | 2455 | | |
| 6 | 2430 | 12 | 2460 | | |

☒Test Frequency and Channel:

| Lowest Frequency | | Middle Frequency | | Highest Frequency | |
|---|---|---|---|---|---|
| Channel | Frequency (MHz) | Channel | Frequency (MHz) | Channel | Frequency (MHz) |
| 1 | 2405 | 8 | 2440 | 16 | 2480 |
| | | | | | |

# 5 FACILITIES AND ACCREDITATIONS

## 5.1 FACILITIES

All measurement facilities used to collect the measurement data are located at

Bldg 69, Majialong Industry Zone District, Nanshan District, Shenzhen, China
The sites are constructed in conformance with the requirements of ANSI C63.7, ANSI C63.4 and CISPR Publication 22.

## 5.2 LABORATORY ACCREDITATIONS AND LISTINGS

Site Description

| | | |
|---|---|---|
| EMC Lab. | : | Accredited by CNAS,2016.10.24<br>The certificate is valid until 2022.10.28<br>The Laboratory has been assessed and proved to be in compliance with CNAS-CL01:2006 (identical to ISO/IEC 17025:2017)<br>The Certificate Registration Number is L2291.<br><br>Accredited by TUV Rheinland Shenzhen 2018.3.30<br>The Laboratory has been assessed according to the requirements ISO/IEC 17025.<br><br>Accredited by FCC, August 06, 2018<br>The certificate is valid until August 07, 2020<br>Designation Number: CN1204<br>Test Firm Registration Number: 882943<br><br>Accredited by Industry Canada, November 09, 2018<br>The Conformity Assessment Body Identifier is CN0008. |
| Name of Firm | : | EMTEK(SHENZHEN) CO., LTD. |
| Site Location | : | Bldg 69, Majialong Industry Zone,<br>Nanshan District, Shenzhen, Guangdong, China |

# 6 TEST SYSTEM UNCERTAINTY

The following measurement uncertainty levels have been estimated for tests performed on the apparatus:

| Parameter | Uncertainty |
|---|---|
| Radio Frequency | ±1x10^-5 |
| Maximum Peak Output Power Test | ±1.0dB |
| Conducted Emissions Test | ±2.0dB |
| Radiated Emission Test | ±2.0dB |
| Power Density | ±2.0dB |
| Occupied Bandwidth Test | ±1.0dB |
| Band Edge Test | ±3dB |
| All emission, radiated | ±3dB |
| Antenna Port Emission | ±3dB |
| Temperature | ±0.5℃ |
| Humidity | ±3% |

Measurement Uncertainty for a level of Confidence of 95%

# 7 SETUP OF EQUIPMENT UNDER TEST

## 7.1 RADIO FREQUENCY TEST SETUP 1

The WLAN component's antenna ports(s) of the EUT are connected to the measurement instrument per an appropriate attenuator. The EUT is controlled by PC/software to emit the specified signals for the purpose of measurements.

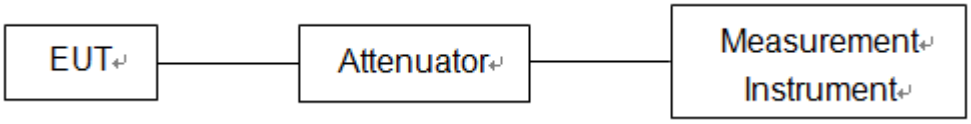


## 7.2 RADIO FREQUENCY TEST SETUP 2

The test site semi-anechoic chamber has met the requirement of NSA tolerance 4 dB according to the standards: ANSI C63.4. The test distance is 3m.The setup is according to the requirements in Section 13.1.4.1 of ANSI C63.4-2014 and CAN/CSA-CEI/IEC CISPR 22.

Below 30MHz：
The EUT is placed on a turntable 0.8 meters above the ground in the chamber, 3 meter away from the antenna (loop antenna). The Antenna should be positioned with its plane vertical at the specified distance from the EUT and rotated about its vertical axis for maximum response at each azimuth about the EUT. The center of the loop shall be 1 m above the ground. For certain applications, the loop antenna plane may also need to be positioned horizontally at the specified distance from the EUT.

Above 30MHz：
The EUT is placed on a turntable 0.8 meters above the ground in the chamber, 3 meter away from the antenna. The maximal emission value is acquired by adjusting the antenna height, polarisation and turntable azimuth. Normally, the height range of antenna is 1 m to 4 m, the azimuth range of turntable is 0° to 360°, and the receive antenna has two polarizations Vertical (V) and Horizontal (H).

Above 1GHz:
(Note: the FCC's permission to use 1.5m as an alternative per TCBC Conf call of Dec. 2, 2014.)
The EUT is placed on a turntable 1.5 meters above the ground in the chamber, 3 meter away from the antenna. The maximal emission value is acquired by adjusting the antenna height, polarisation and turntable azimuth. Normally, the height range of antenna is 1 m to 4 m, the azimuth range of turntable is 0° to 360°, and the receive antenna has two polarizations Vertical (V) and Horizontal (H).

(a) Radiated Emission Test Set-Up, Frequency Below 30MHz

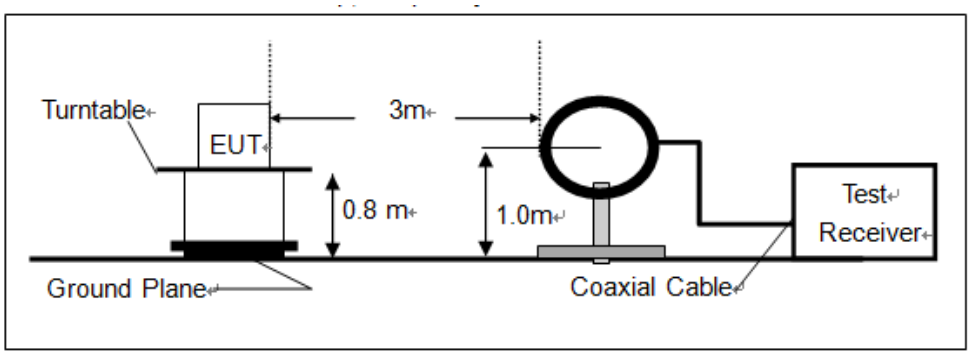

(b) Radiated Emission Test Set-Up, Frequency Below 1000MHz

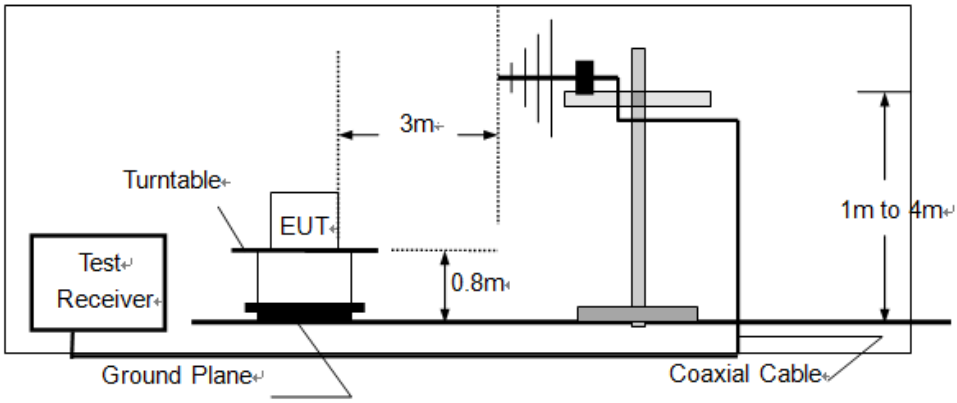


(c) Radiated Emission Test Set-Up, Frequency above 1000MHz

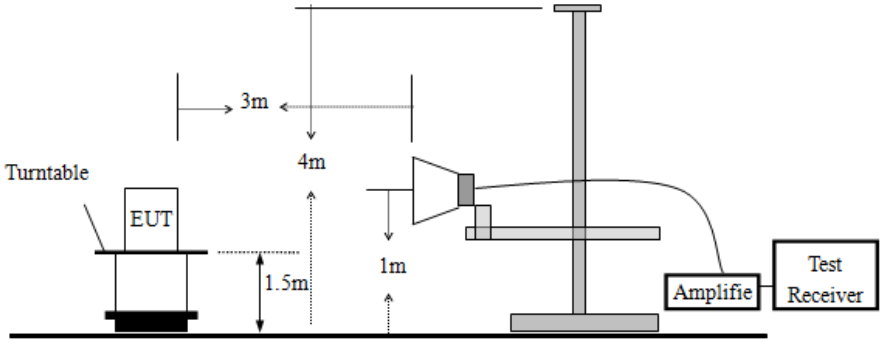

### 7.3 CONDUCTED EMISSION TEST SETUP

The mains cable of the EUT (maybe per AC/DC Adapter) must be connected to LISN. The LISN shall be placed 0.8 m from the boundary of EUT and bonded to a ground reference plane for LISN mounted on top of the ground reference plane. This distance is between the closest points of the LISN and the EUT. All other units of the EUT and associated equipment shall be at least 0.8m from the LISN.

Ground connections, where required for safety purposes, shall be connected to the reference ground point of the LISN and, where not otherwise provided or specified by the manufacturer, shall be of same length as the mains cable and run parallel to the mains connection at a separation distance of not more than 0.1 m.

According to the requirements in Section 13.1.4.1 of ANSI C63.4-2014 Conducted emissions from the EUT measured in the frequency range between 0.15 MHz and 30 MHz using CISPR Quasi-Peak and average detector mode.

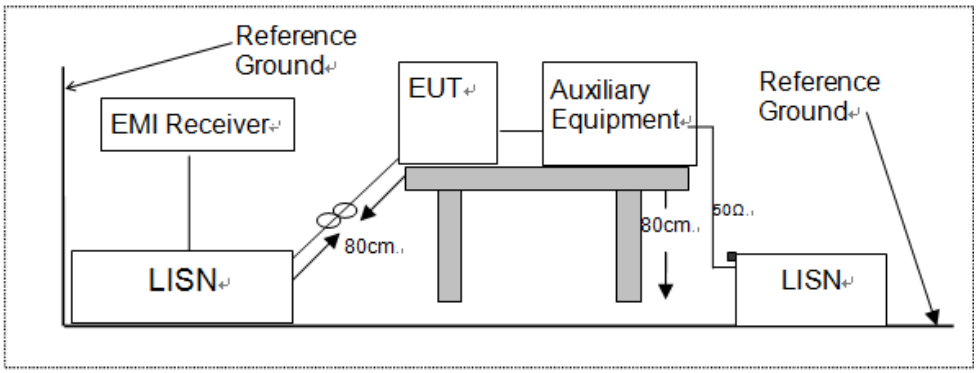

## 7.4 BLOCK DIAGRAM CONFIGURATION OF TEST SYSTEM

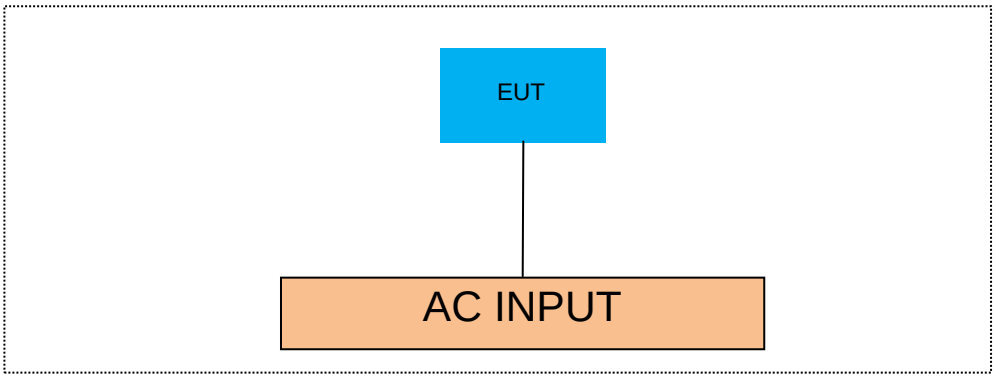


## 7.5 SUPPORT EQUIPMENT

| EUT Cable List and Details | | | |
|---|---|---|---|
| Cable Description | Length (m) | Shielded/Unshielded | With / Without Ferrite |
| \ | \ | \ | \ |

| Auxiliary Cable List and Details | | | |
|---|---|---|---|
| Cable Description | Length (m) | Shielded/Unshielded | With / Without Ferrite |
| \ | \ | \ | \ |

| Auxiliary Equipment List and Details | | | |
|---|---|---|---|
| Description | Manufacturer | Model | Serial Number |
| \ | \ | \ | \ |

***Notes:***

1. *All the equipment/cables were placed in the worst-case configuration to maximize the emission during the test.*
2. *Grounding was established in accordance with the manufacturer's requirements and conditions for the intended use.*

# 8 TEST REQUIREMENTS

## 8.1 DTS (6DB) BANDWIDTH

**Applicable Standard**

According to FCC Part 15.247(a)(2) and KDB 558074 D01 DTS Meas Guidance V05r02

**Conformance Limit**

The minimum -6 dB bandwidth shall be at least 500 kHz.

**Test Configuration**

Test according to clause 7.1 radio frequency test setup 1

**Test Procedure**

The EUT was operating in O-QPSK mode and controlled its channel. Printed out the test result from the spectrum by hard copy function.
The RF output of EUT was connected to the spectrum analyzer by RF cable and attenuator. The path loss was compensated to the results for each measurement.
Set to the maximum power setting and enable the EUT transmit continuously
Set RBW = 100 kHz.
Set the video bandwidth (VBW) =300 kHz.
Set Span=2 times OBW
Set Detector = Peak.
Set Trace mode = max hold.
Set Sweep = auto couple.
Allow the trace to stabilize.
Measure the maximum width of the emission that is constrained by the frequencies associated with the two outermost amplitude points (upper and lower frequencies) that are attenuated by 6 dB relative to the maximum level measured in the fundamental emission.
Measure and record the results in the test report.

**Test Results**

| | |
|---|---|
| Temperature: | 26° C |
| Relative Humidity: | 54% |
| ATM Pressure: | 1011 mbar |

| Operation Mode | Channel Number | Channel Frequency (MHz) | Measurement Bandwidth (MHz) | Limit (kHz) | Verdict |
|---|---|---|---|---|---|
| O-QPSK | 1 | 2405 | 1.649 | >500 | PASS |
| | 8 | 2440 | 1.645 | >500 | PASS |
| | 16 | 2480 | 1.648 | >500 | PASS |

| | |
|---|---|
| Test Model | DTS (6dB) Bandwidth<br>O-QPSK<br>Channel 1: 2405MHz |

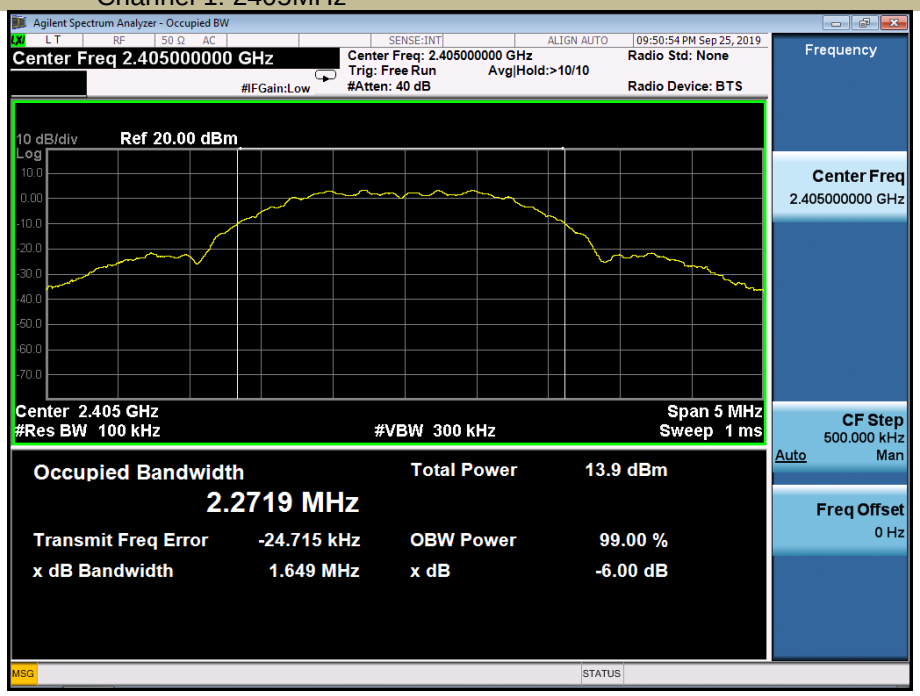


| | |
|---|---|
| Test Model | DTS (6dB) Bandwidth<br>O-QPSK<br>Channel 8: 2440MHz |

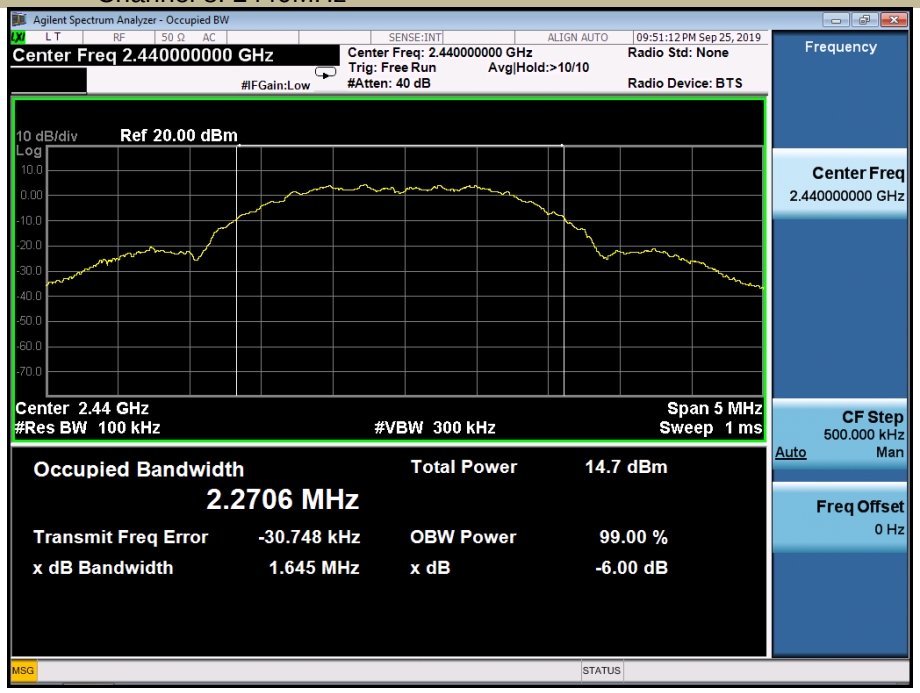

| | |
|---|---|
| Test Model | DTS (6dB) Bandwidth<br>O-QPSK<br>Channel 16: 2480MHz |

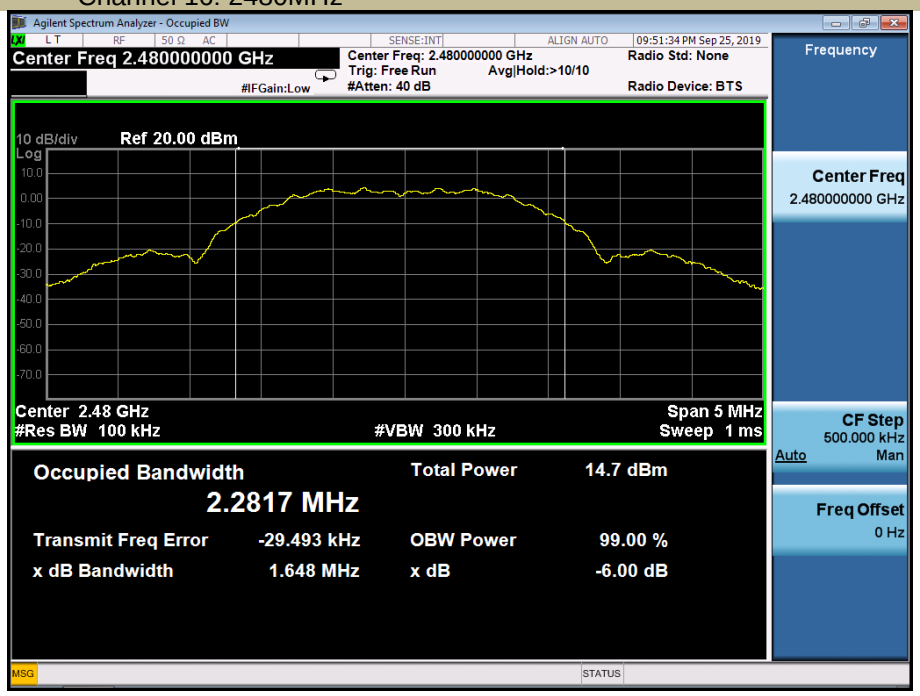

## 8.2 MAXIMUM PEAK CONDUCTED OUTPUT POWER

### 8.2.1 Applicable Standard

According to FCC Part 15.247(b)(3) and KDB 558074 D01 DTS Meas Guidance V05r02

Conformance Limit

The maximum peak conducted output power of the intentional radiator for systems using digital modulation in the 2400 - 2483.5 MHz bands shall not exceed: 1 Watt (30dBm).

### 8.2.2 Test Configuration

Test according to clause 7.1 radio frequency test setup 1

### 8.2.3 Test Procedure

■ According to FCC Part15.247(b)(3)
The maximum peak conducted output power may be measured using a broadband peak RF power meter. The power meter shall have a video bandwidth that is greater than or equal to the DTS bandwidth and shall utilize a fast-responding diode detector.
The testing follows FCC public Notice DA 00-705 Measurement Guidelines.
The RF output of EUT was connected to the power meter by RF cable and attnuator. The path loss was compensated to the results for each measurement.
Set to the maximum output power setting and enable the EUT transmit continuously.
Measure the conducted output power with cable loss and record the results in the test report.
Measure and record the results in the report.
■ According to FCC Part 15.247(b)(4):
Conducted output power limit specified in paragraph (b) of this section is based on the use of antennas with directional gains that do not exceed 6 dBi. If transmitting antennas of directional gain greater than 6 dBi are used, the conducted output power from the intentional radiator shall be reduced below the stated values in paragraphs (b)(3) of this section, as appropriate, by the amount in dB that the directional gain of the antenna exceeds 6 dBi.
Note: If antenna Gain exceeds 6 dBi, then Output power Limit=30-(Gain - 6)

### 8.2.4 Test Results

| | |
|---|---|
| Temperature: | 26° C |
| Relative Humidity: | 54% |
| ATM Pressure: | 1011 mbar |

| Operation Mode | Channel Number | Channel Frequency (MHz) | Measurement Level (dBm) | Limit (dBm) | Verdict |
|---|---|---|---|---|---|
| O-QPSK | 1 | 2405 | 7.033 | 30 | PASS |
| | 8 | 2440 | 7.959 | 30 | PASS |
| | 16 | 2480 | 7.857 | 30 | PASS |

## 8.3 MAXIMUM POWER SPECTRAL DENSITY

### 8.3.1 Applicable Standard

According to FCC Part 15.247(e) and KDB 558074 D01 DTS Meas Guidance V05r02

### 8.3.2 Conformance Limit

The transmitter power spectral density conducted from the transmitter to the antenna shall not be greater than 8 dBm in any 3 kHz band during any time interval of continuous transmission.

### 8.3.3 Test Configuration

Test according to clause 7.1 radio frequency test setup 1

### 8.3.4 Test Procedure

This procedure shall be used if maximum peak conducted output power was used to demonstrate compliance
The transmitter output (antenna port) was connected to the spectrum analyzer
Set analyzer center frequency to DTS channel center frequency.
Set the span to 1.5 times the DTS bandwidth.
Set the RBW to: 3 kHz
Set the VBW to: 10 kHz.
Set Detector = peak.
Set Sweep time = auto couple.
Set Trace mode = max hold.
Allow trace to fully stabilize.
Use the peak marker function to determine the maximum amplitude level within the RBW.
Note: If antenna Gain exceeds 6 dBi, then PSD Limit=8-(Gain - 6)

### 8.3.5 Test Results

| | |
|---|---|
| Temperature: | 26° C |
| Relative Humidity: | 54% |
| ATM Pressure: | 1011 mbar |

| Operation Mode | Channel Number | Channel Frequency (MHz) | Measurement Level (dBm/3kHz) | Limit (dBm/3kHz) | Verdict |
|---|---|---|---|---|---|
| O-QPSK | 1 | 2405 | -8.329 | <8 | PASS |
| | 8 | 2440 | -8.401 | <8 | PASS |
| | 16 | 2480 | -7.860 | <8 | PASS |

| | |
|---|---|
| Test Model | Power Spectral Density<br>O-QPSK<br>Channel 1: 2405MHz |

| | |
|---|---|
| Test Model | Power Spectral Density<br>O-QPSK<br>Channel 8: 2440MHz |

| | |
|---|---|
| Test Model | Power Spectral Density<br>O-QPSK<br>Channel 16: 2480MHz |

## 8.4 UNWANTED EMISSIONS IN NON-RESTRICTED FREQUENCY BANDS

### 8.4.1 Applicable Standard

According to FCC Part 15.247(d) and KDB 558074 D01 DTS Meas Guidance V05r02

### 8.4.2 Conformance Limit

According to FCC Part 15.247(d):
In any 100 kHz bandwidth outside the frequency band in which the spread spectrum or digitally modulated intentional radiator is operating, the radio frequency power that is produced by the intentional radiator shall be at least 20 dB below that in the 100 kHz bandwidth within the band that contains the highest level of the desired power, based on either an RF conducted or a radiated measurement, provided the transmitter demonstrates compliance with the peak conducted power limits. If the transmitter complies with the conducted power limits based on the use of RMS averaging over a time interval, as permitted under paragraph (b)(3) of this section, the attenuation required under this paragraph shall be 30 dB instead of 20 dB.

### 8.4.3 Test Configuration

Test according to clause 7.1 radio frequency test setup 1

### 8.4.4 Test Procedure

The transmitter output (antenna port) was connected to the spectrum analyzer

- **Reference level measurement**

Establish a reference level by using the following procedure:
Set instrument center frequency to DTS channel center frequency.
Set the span to ≥ 1.5 times the DTS bandwidth.
Set the RBW = 100 kHz.
Set the VBW ≥ 3 x RBW.
Set Detector = peak.
Set Sweep time = auto couple.
Set Trace mode = max hold.
Allow trace to fully stabilize.
Use the peak marker function to determine the maximum PSD level.
Note that the channel found to contain the maximum PSD level can be used to establish the reference level.

- **Emission level measurement**

Set the center frequency and span to encompass frequency range to be measured.
Set the RBW = 100 kHz.
Set the VBW =300 kHz.
Set Detector = peak
Sweep time = auto couple.
Trace mode = max hold.
Allow trace to fully stabilize.
Use the peak marker function to determine the maximum amplitude level.
Ensure that the amplitude of all unwanted emissions outside of the authorized frequency band (excluding restricted frequency bands) are attenuated by at least the minimum requirements . Report the three highest emissions relative to the limit.

### 8.4.5 Test Results

| | |
|---|---|
| Temperature: | 26° C |
| Relative Humidity: | 54% |
| ATM Pressure: | 1011 mbar |

| | |
|---|---|
| Test Model | PSD(Power Spectral Density ) RBW=100kHz<br>O-QPSK<br>☒Channel 1: 2405MHz |

| | |
|---|---|
| Test Model | Unwanted Emissions in non-restricted frequency bands<br>O-QPSK<br>☒Channel 1: 2405MHz |

| | |
|---|---|
| Test Model | Band edge<br>O-QPSK<br>☒Channel 1: 2405MHz |

| | |
|---|---|
| Test Model | PSD(Power Spectral Density ) RBW=100kHz<br>O-QPSK<br>☒Channel 8: 2440MHz |

| | |
|---|---|
| Test Model | Unwanted Emissions In Non-Restricted Frequency Bands<br>O-QPSK<br>☒Channel 8: 2440MHz |

| | |
|---|---|
| Test Model | PSD(Power Spectral Density ) RBW=100kHz<br>O-QPSK<br>☒Channel 16: 2480MHz |

| | |
|---|---|
| Test Model | Unwanted Emissions In Non-Restricted Frequency Bands<br>O-QPSK<br>☒Channel 16: 2480MHz |

| | |
|---|---|
| Test Model | Band edge<br>O-QPSK<br>☒Channel 16: 2480MHz |

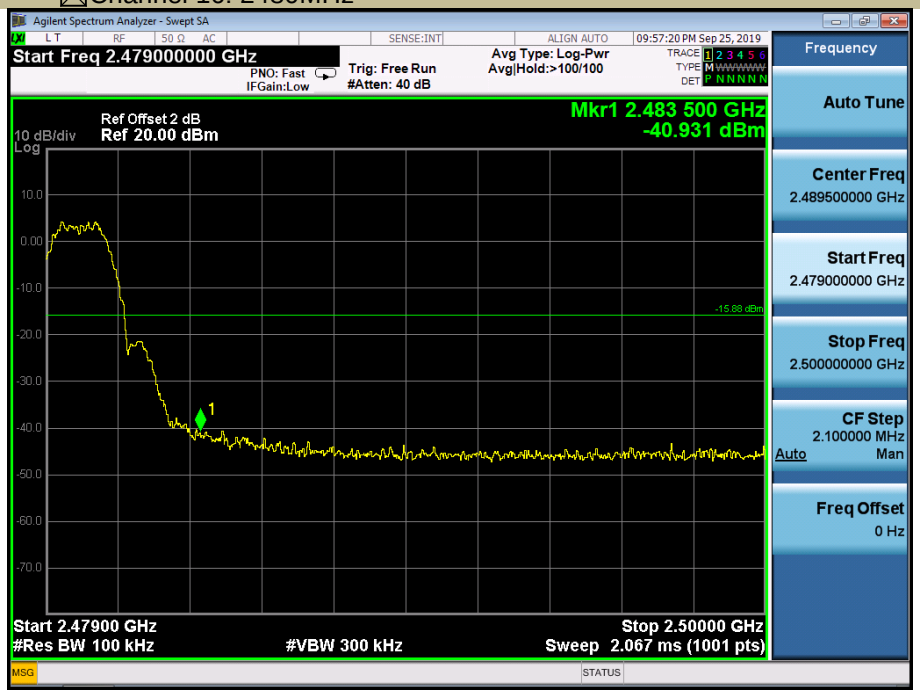

## 8.5 RADIATED SPURIOUS EMISSION

### 8.5.1 Applicable Standard

According to FCC Part 15.247(d) and 15.209 and KDB 558074 D01 DTS Meas Guidance V05r02

### 8.5.2 Conformance Limit

According to FCC Part 15.247(d): radiated emissions which fall in the restricted bands, as defined in §15.205(a), must also comply with the radiated emission limits specified in §15.209(a) (see §15.205(c)).
According to FCC Part15.205, Restricted bands

| MHz | MHz | MHz | GHz |
|---|---|---|---|
| 0.090-0.110 | 16.42-16.423 | 399.9-410 | 4.5-5.15 |
| 10.495-0.505 | 16.69475-16.69525 | 608-614 | 5.35-5.46 |
| 2.1735-2.1905 | 16.80425-16.80475 | 960-1240 | 7.25-7.75 |
| 4.125-4.128 | 25.5-25.67 | 1300-1427 | 8.025-8.5 |
| 4.17725-4.17775 | 37.5-38.25 | 1435-1626.5 | 9.0-9.2 |
| 4.20725-4.20775 | 73-74.6 | 1645.5-1646.5 | 9.3-9.5 |
| 6.215-6.218 | 74.8-75.2 | 1660-1710 | 10.6-12.7 |
| 6.26775-6.26825 | 123-138 | 2200-2300 | 14.47-14.5 |
| 8.291-8.294 | 149.9-150.05 | 2310-2390 | 15.35-16.2 |
| 8.362-8.366 | 156.52475-156.52525 | 2483.5-2500 | 17.7-21.4 |
| 8.37625-8.38675 | 156.7-156.9 | 2690-2900 | 22.01-23.12 |
| 8.41425-8.41475 | 162.0125-167.17 | 3260-3267 | 23.6-24.0 |
| 12.29-12.293 | 167.72-173.2 | 3332-3339 | 31.2-31.8 |
| 12.51975-12.52025 | 240-285 | 3345.8-3358 | 36.43-36.5 |
| 12.57675-12.57725 | 322-335.4 | 3600-4400 | (2) |
| 13.36-13.41 | | | |

According to FCC Part15.205, the level of any transmitter spurious emission in Restricted bands shall not exceed the level of the emission specified in the following table

| Restricted Frequency(MHz) | Field Strength (μV/m) | Field Strength (dBμV/m) | Measurement Distance |
|---|---|---|---|
| 0.009-0.490 | 2400/F(KHz) | 20 log (uV/m) | 300 |
| 0.490-1.705 | 2400/F(KHz) | 20 log (uV/m) | 30 |
| 1.705-30 | 30 | 29.5 | 30 |
| 30-88 | 100 | 40 | 3 |
| 88-216 | 150 | 43.5 | 3 |
| 216-960 | 200 | 46 | 3 |
| Above 960 | 500 | 54 | 3 |

### 8.5.3 Test Configuration

Test according to clause 7.2 radio frequency test setup 2

### 8.5.4 Test Procedure

This test is required for any spurious emission that falls in a Restricted Band, as defined in Section 15.205. It must be performed with the highest gain of each type of antenna proposed for use with the EUT. Use the following spectrum analyzer settings:
For Above 1GHz:
The EUT was placed on a turn table which is 1.5m above ground plane.
Maximum procedure was performed on the highest emissions to ensure EUT compliance.
Span = wide enough to fully capture the emission being measured
RBW = 1 MHz
VBW ≥ RBW
Sweep = auto
Detector function = peak

Trace = max hold
For Below 1GHz:
The EUT was placed on a turn table which is 0.8m above ground plane.
Maximum procedure was performed on the highest emissions to ensure EUT compliance.
Span = wide enough to fully capture the emission being measured
RBW = 100 kHz for
VBW ≥ RBW
Sweep = auto
Detector function = peak
Trace = max hold
For Below 30MHz:
The EUT was placed on a turn table which is 0.8m above ground plane.
Maximum procedure was performed on the highest emissions to ensure EUT compliance.
Span = wide enough to fully capture the emission being measured
RBW = 9kHz
VBW ≥ RBW
Sweep = auto
Detector function = peak
Trace = max hold
For Below 150KHz:
The EUT was placed on a turn table which is 0.8m above ground plane.
Maximum procedure was performed on the highest emissions to ensure EUT compliance.
Span = wide enough to fully capture the emission being measured
RBW = 200Hz
VBW ≥ RBW
Sweep = auto
Detector function = peak
Trace = max hold
Follow the guidelines in ANSI C63.10-2013 with respect to maximizing the emission by rotating the EUT, measuring the emission while the EUT is situated in three orthogonal planes (if appropriate), adjusting the measurement antenna height and polarization, etc. A pre-amp and a high pass filter are required for this test, in order to provide the measuring system with sufficient sensitivity. Allow the trace to stabilize. The peak reading of the emission, after being corrected by the antenna factor, cable loss, pre-amp gain, etc., is the peak field strength, which must comply with the limit specified in Section 15.35(b). Submit this data.
Now set the VBW to 10 Hz, while maintaining all of the other instrument settings. This peak level, once corrected, must comply with the limit specified in Section 15.209. If the dwell time per channel of the hopping signal is less than 100 ms, then the reading obtained with the 10 Hz VBW may be further adjusted by a “duty cycle correction factor”, derived from 20log(dwell time/100 ms), in an effort to demonstrate compliance with the 15.209 limit. Submit this data.
Repeat above procedures until all frequency measured was complete.

### 8.5.5 Test Results

| | |
|---|---|
| Temperature: | 26° C |
| Relative Humidity: | 54% |
| ATM Pressure: | 1011 mbar |

■ Spurious Emission below 30MHz (9KHz to 30MHz)

Test mode: TX Mode

| Freq. (MHz) | Ant.Pol. H/V | Emission Level(dBuV/m) | | Limit 3m(dBuV/m) | | Over(dB) | |
|---|---|---|---|---|---|---|---|
| | | PK | AV | PK | AV | PK | AV |
| -- | -- | -- | -- | -- | -- | -- | -- |

Note: the amplitude of spurious emission that is attenuated by more than 20dB below the permissible limit has no need to be reported.
Distance extrapolation factor =40log(Specific distance/ test distance)( dB);
Limit line=Specific limits(dBuV) + distance extrapolation factor

■ Spurious Emission Above 1GHz (1GHz to 25GHz)

Test mode: O-QPSK Frequency: Channel 1: 2405MHz

| Freq. (MHz) | Ant.Pol. H/V | Emission Level(dBuV/m) | | Limit 3m(dBuV/m) | | Over(dB) | |
|---|---|---|---|---|---|---|---|
| | | PK | AV | PK | AV | PK | AV |
| 7755.80 | V | 51.48 | 40.26 | 74 | 54 | -22.52 | -13.74 |
| 9615.60 | V | 51.70 | 40.34 | 74 | 54 | -22.30 | -13.66 |
| 14003.3 | V | 56.37 | 43.11 | 74 | 54 | -17.63 | -10.89 |
| 7929.20 | H | 51.92 | 40.18 | 74 | 54 | -22.08 | -13.82 |
| 10882.1 | H | 55.75 | 41.78 | 74 | 54 | -18.25 | -12.22 |
| 14003.3 | H | 57.24 | 43.11 | 74 | 54 | -16.76 | -10.89 |

Test mode: O-QPSK Frequency: Channel 8: 2440MHz

| Freq. (MHz) | Ant.Pol. H/V | Emission Level(dBuV/m) | | Limit 3m(dBuV/m) | | Over(dB) | |
|---|---|---|---|---|---|---|---|
| | | PK | AV | PK | AV | PK | AV |
| 9712.50 | V | 53.00 | 41.65 | 74 | 54 | -21.00 | -12.35 |
| 11466.9 | V | 53.85 | 41.80 | 74 | 54 | -20.15 | -12.20 |
| 14001.6 | V | 55.84 | 43.59 | 74 | 54 | -18.16 | -10.41 |
| 10052.5 | H | 54.11 | 41.72 | 74 | 54 | -19.89 | -12.28 |
| 12191.1 | H | 54.84 | 41.33 | 74 | 54 | -19.16 | -12.67 |
| 14304.2 | H | 56.24 | 42.73 | 74 | 54 | -17.76 | -11.27 |

Test mode: O-QPSK Frequency: Channel 1: 2480MHz

| Freq. (MHz) | Ant.Pol. H/V | Emission Level(dBuV/m) | | Limit 3m(dBuV/m) | | Over(dB) | |
|---|---|---|---|---|---|---|---|
| | | PK | AV | PK | AV | PK | AV |
| 10831.1 | V | 53.41 | 41.22 | 74 | 54 | -20.59 | -12.78 |
| 12248.9 | V | 55.76 | 42.69 | 74 | 54 | -18.24 | -11.31 |
| 14054.3 | V | 55.79 | 42.76 | 74 | 54 | -18.21 | -11.24 |
| 7133.60 | H | 49.78 | 38.29 | 74 | 54 | -24.22 | -15.71 |
| 12248.9 | H | 55.76 | 42.16 | 74 | 54 | -18.24 | -11.84 |
| 13821.4 | H | 56.15 | 43.33 | 74 | 54 | -17.85 | -10.67 |

**Note:** (1) All Readings are Peak Value (VBW=3MHz) and Peak Value (VBW=10Hz).
(2) Emission Level= Reading Level+Probe Factor +Cable Loss.
(3) Data of measurement within this frequency range shown " -- " in the table above means the reading of emissions are attenuated more than 20dB below the permissible limits or the field strength is too small to be measured.

■ Spurious Emission in Restricted Band 2310-2390MHz and 2483.5-2500MHz

| Test mode: | O-QPSK | Frequency: | Channel 1: 2405MHz |
|---|---|---|---|

| Frequency (MHz) | Polarity | PK(dBuV/m) (VBW=3MHz) | Limit 3m (dBuV/m) | PK(dBuV/m) (VBW=10Hz) | Limit 3m (dBuV/m) |
|---|---|---|---|---|---|
| 2387.576 | H | 53.49 | 74.00 | 42.58 | 54.00 |
| 2387.456 | V | 46.41 | 74.00 | 38.75 | 54.00 |

| Test mode: | O-QPSK | Frequency: | Channel 16: 2480MHz |
|---|---|---|---|

| Frequency (MHz) | Polarity | PK(dBuV/m) (VBW=3MHz) | Limit 3m (dBuV/m) | PK(dBuV/m) (VBW=10Hz) | Limit 3m (dBuV/m) |
|---|---|---|---|---|---|
| 2491.875 | H | 63.35 | 74.00 | 40.21 | 54.00 |
| 2483.977 | V | 46.76 | 74.00 | 38.62 | 54.00 |

**Note:** (1) All Readings are Peak Value (VBW=3MHz) and Peak Value (VBW=10Hz).
(2) Emission Level= Reading Level+Probe Factor +Cable Loss.
(3) Data of measurement within this frequency range shown “ -- ” in the table above means the reading of emissions are attenuated more than 20dB below the permissible limits or the field strength is too small to be measured.

All the modulation modes were tested, the data of the worst mode are described in the following table

| Test Model | Spurious Emission in Restricted Band 2310-2390MHz<br>O-QPSK<br>☒Channel 1: 2405MHz ☐Channel 16: 2480MHz Polarity: H |
|---|---|

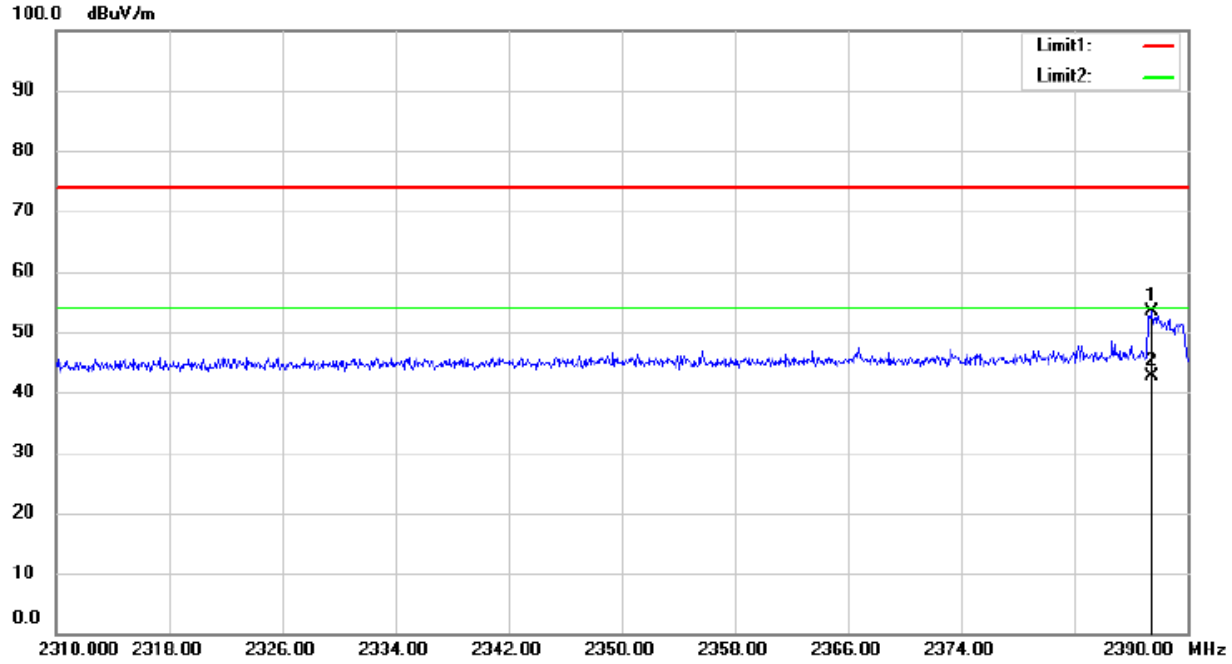


| Test Model | Spurious Emission in Restricted Band 2310-2390MHz<br>O-QPSK<br>☒Channel 1: 2405MHz ☐Channel 16: 2480MHz Polarity: V |
|---|---|

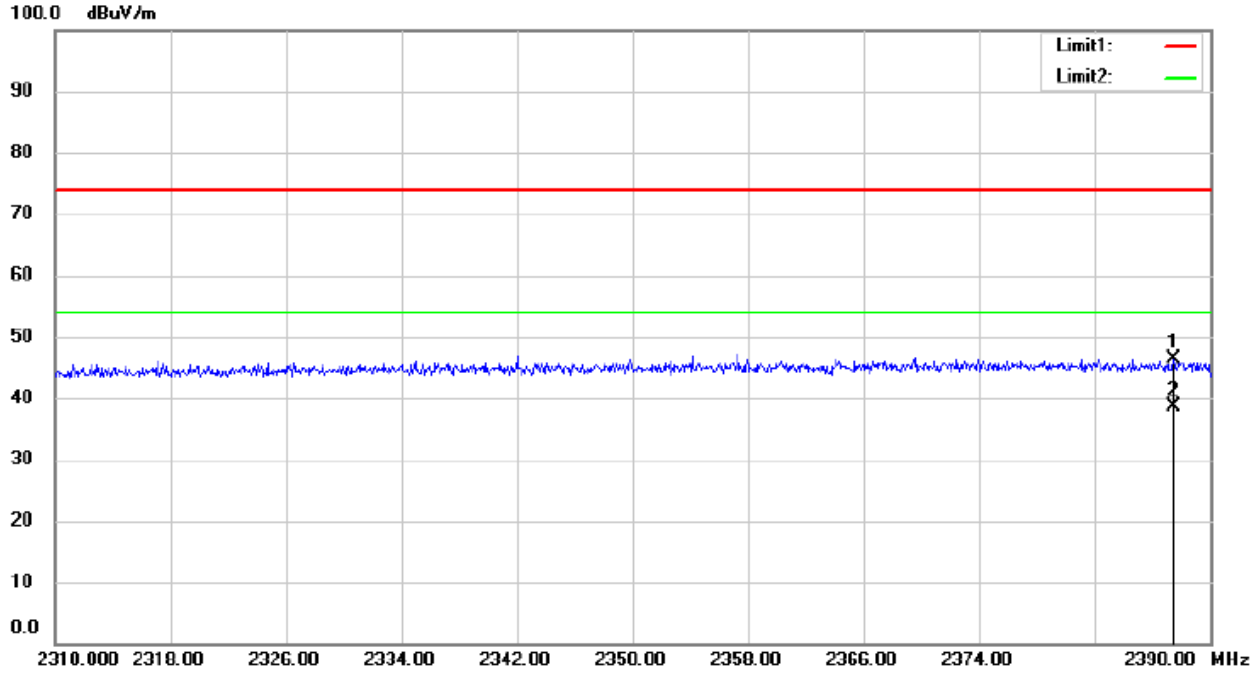

| Test Model | Spurious Emission in Restricted Band 2483.5-2500MHz<br>O-QPSK<br>☐Channel 1: 2405MHz ☒Channel 16: 2480MHz Polarity: H |
|---|---|

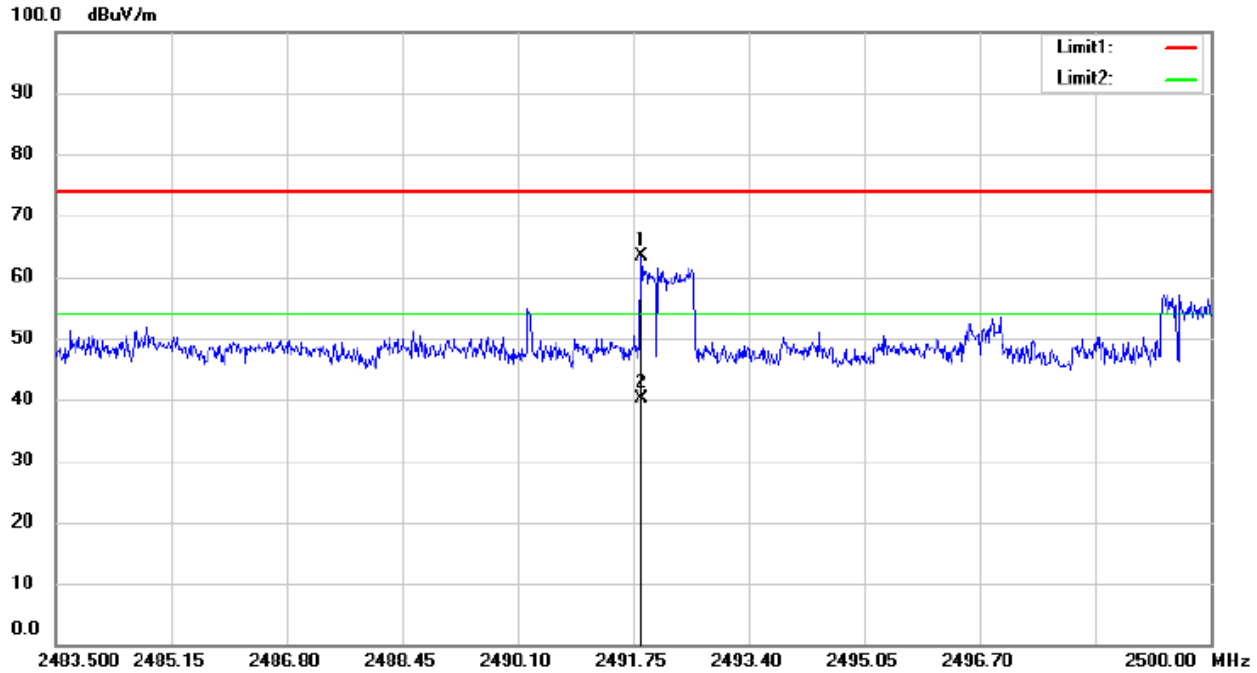


| Test Model | Spurious Emission in Restricted Band 2483.5-2500MHz<br>O-QPSK<br>☐Channel 1: 2405MHz ☒Channel 16: 2480MHz Polarity: V |
|---|---|

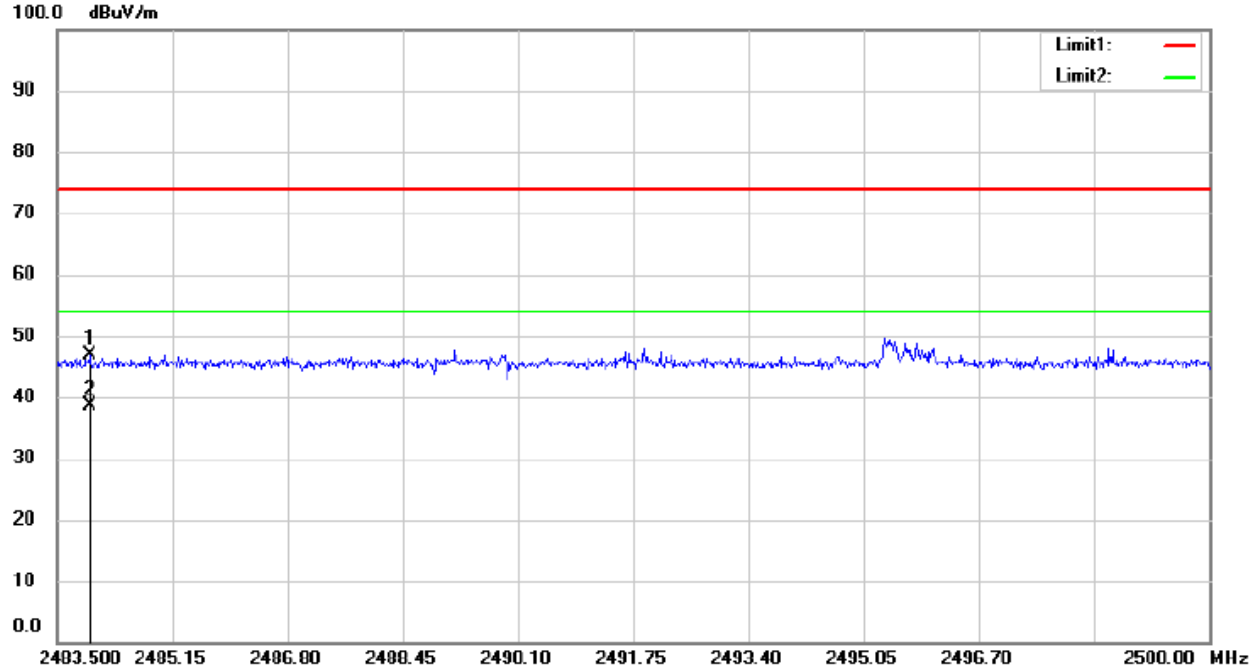

■ Spurious Emission below 1GHz (30MHz to 1GHz)

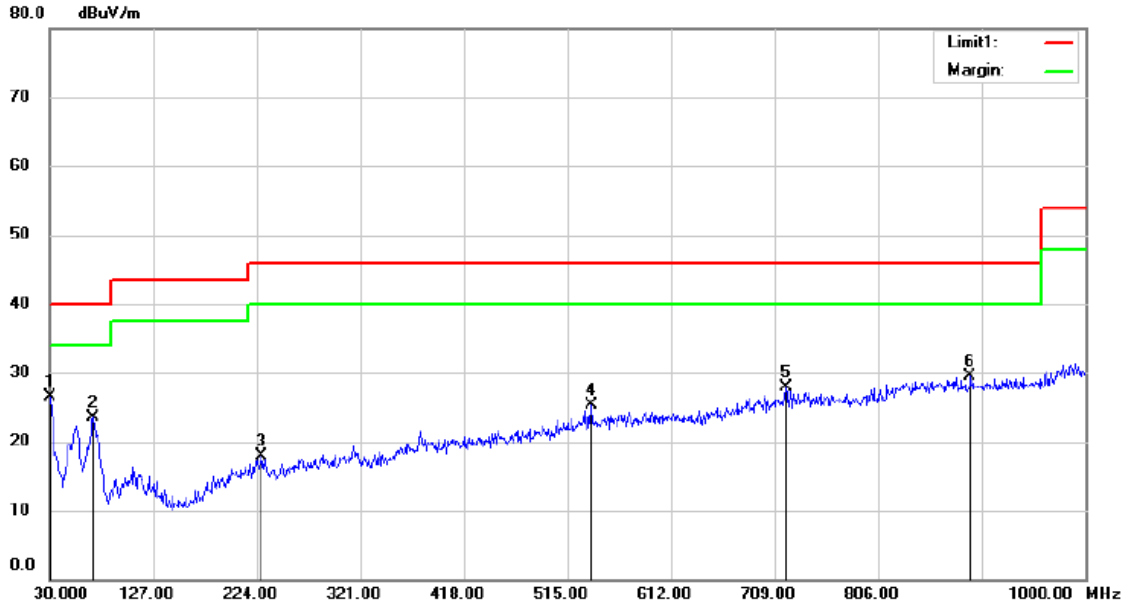


Site 3m Chamber #3 Polarization: ***Vertical*** Temperature: 22.5 C

Limit: (RE)FCC PART 15 C Power: AC 120V/60Hz Humidity: 61 %

Mode: ZIGBEE LOW

Note:

| No. | Mk. | Freq. | Reading Level | Correct Factor | Measure-ment | Limit | Over | | Antenna Height | Table Degree | |
|---|---|---|---|---|---|---|---|---|---|---|---|
| | | MHz | dBuV | dB | dBuV/m | dBuV/m | dB | Detector | cm | degree | Comment |
| 1 | * | 31.2610 | 42.59 | -16.13 | 26.46 | 40.00 | -13.54 | QP | | | |
| 2 | | 71.0310 | 40.64 | -17.08 | 23.56 | 40.00 | -16.44 | QP | | | |
| 3 | | 229.3350 | 30.98 | -13.11 | 17.87 | 46.00 | -28.13 | QP | | | |
| 4 | | 537.3100 | 30.43 | -5.21 | 25.22 | 46.00 | -20.78 | QP | | | |
| 5 | | 720.2520 | 29.62 | -1.74 | 27.88 | 46.00 | -18.12 | QP | | | |
| 6 | | 892.5240 | 28.82 | 0.66 | 29.48 | 46.00 | -16.52 | QP | | | |

*:Maximum data x:Over limit !:over margin Operator: ZL

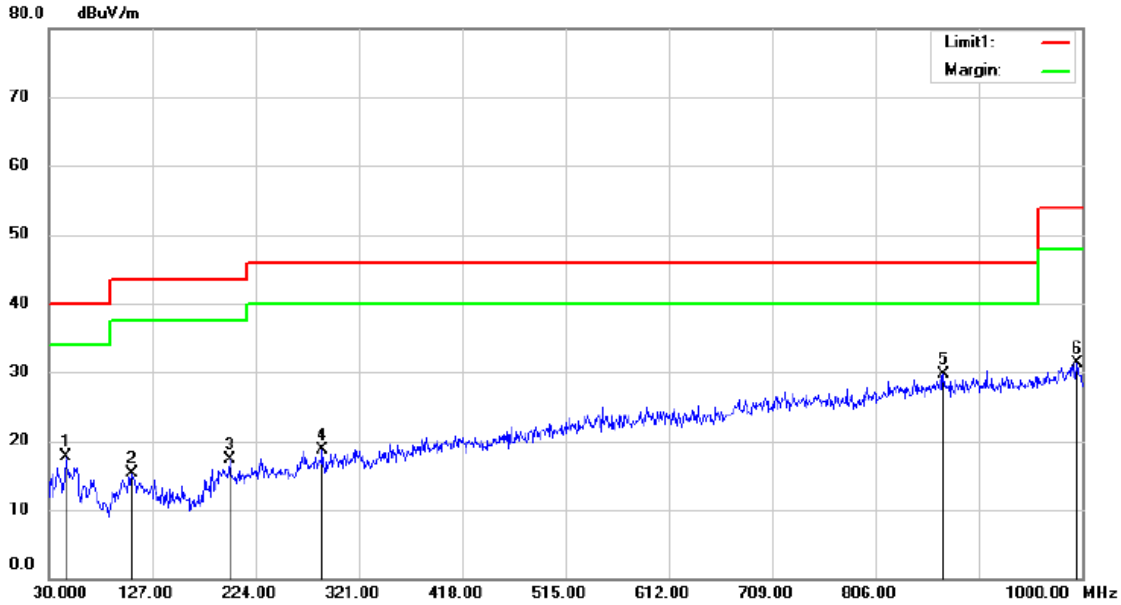


Site 3m Chamber #3 Polarization: ***Horizontal*** Temperature: 22.5 C

Limit: (RE)FCC PART 15 C Power: AC 120V/60Hz Humidity: 61 %

Mode:ZIGBEE LOW

Note:

| No. | Mk. | Freq. | Reading Level | Correct Factor | Measure-ment | Limit | Over | | Antenna Height | Table Degree | |
|---|---|---|---|---|---|---|---|---|---|---|---|
| | | MHz | dBuV | dB | dBuV/m | dBuV/m | dB | Detector | cm | degree | Comment |
| 1 | | 46.5870 | 30.83 | -13.22 | 17.61 | 40.00 | -22.39 | QP | | | |
| 2 | | 108.4730 | 29.77 | -14.40 | 15.37 | 43.50 | -28.13 | QP | | | |
| 3 | | 200.0410 | 30.23 | -13.00 | 17.23 | 43.50 | -26.27 | QP | | | |
| 4 | | 287.8260 | 29.89 | -11.20 | 18.69 | 46.00 | -27.31 | QP | | | |
| 5 | * | 870.4080 | 28.86 | 0.86 | 29.72 | 46.00 | -16.28 | QP | | | |
| 6 | | 996.0230 | 28.86 | 2.46 | 31.32 | 54.00 | -22.68 | QP | | | |

*:Maximum data x:Over limit !:over margin Operator: ZL

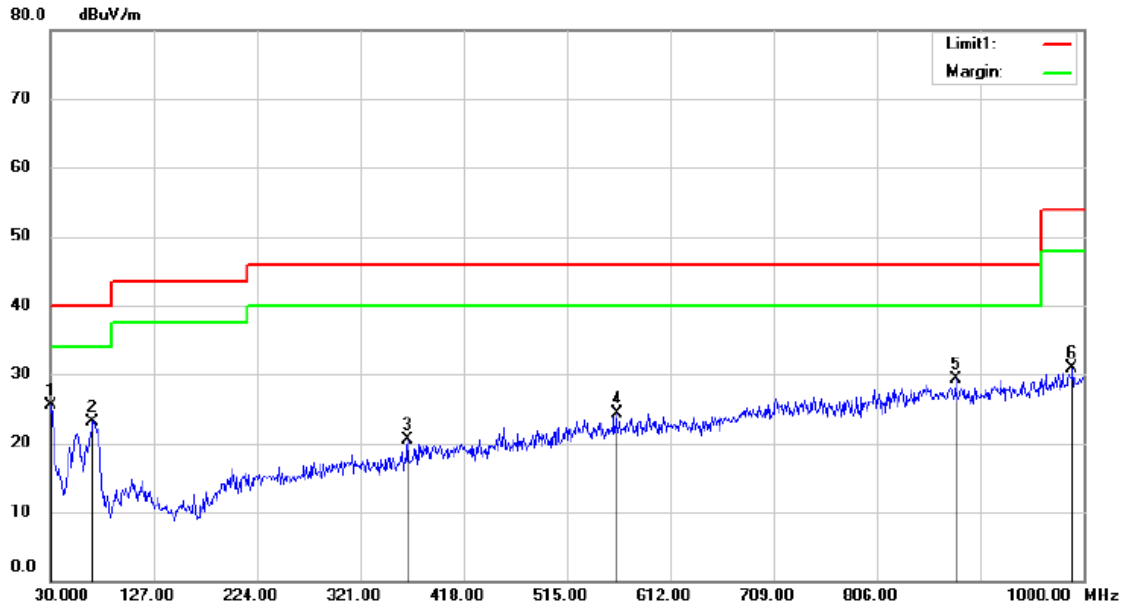


Site 3m Chamber #3 Polarization: *Vertical* Temperature: 22.5 C

Limit: (RE)FCC PART 15 C Power: AC 120V/60Hz Humidity: 61 %

Mode: ZIGBEE MIDDLE

Note:

| No. | Mk. | Freq. | Reading Level | Correct Factor | Measure-ment | Limit | Over | | Antenna Height | Table Degree | |
|---|---|---|---|---|---|---|---|---|---|---|---|
| | | MHz | dBuV | dB | dBuV/m | dBuV/m | dB | Detector | cm | degree | Comment |
| 1 | * | 31.0670 | 41.70 | -16.11 | 25.59 | 40.00 | -14.41 | QP | | | |
| 2 | | 70.3520 | 40.17 | -16.99 | 23.18 | 40.00 | -16.82 | QP | | | |
| 3 | | 365.6200 | 29.79 | -9.23 | 20.56 | 46.00 | -25.44 | QP | | | |
| 4 | | 561.8510 | 29.21 | -4.87 | 24.34 | 46.00 | -21.66 | QP | | | |
| 5 | | 880.5930 | 28.98 | 0.34 | 29.32 | 46.00 | -16.68 | QP | | | |
| 6 | | 989.3300 | 28.31 | 2.52 | 30.83 | 54.00 | -23.17 | QP | | | |

*:Maximum data x:Over limit !:over margin Operator: ZL

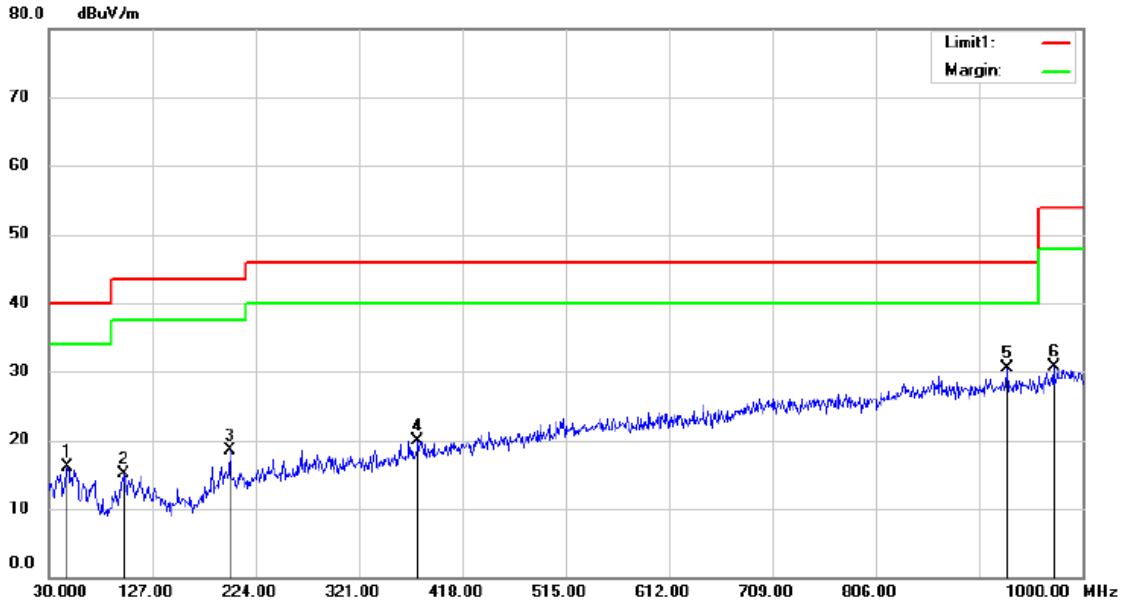


Site 3m Chamber #3 Polarization: ***Horizontal*** Temperature: 22.5 C

Limit: (RE)FCC PART 15 C Power: AC 120V/60Hz Humidity: 61 %

Mode: ZIGBEE MIDDLE

Note:

| No. | Mk. | Freq. | Reading Level | Correct Factor | Measure-ment | Limit | Over | | Antenna Height | Table Degree | |
|---|---|---|---|---|---|---|---|---|---|---|---|
| | | MHz | dBuV | dB | dBuV/m | dBuV/m | dB | Detector | cm | degree | Comment |
| 1 | | 47.8480 | 29.18 | -13.04 | 16.14 | 40.00 | -23.86 | QP | | | |
| 2 | | 101.2950 | 29.62 | -14.61 | 15.01 | 43.50 | -28.49 | QP | | | |
| 3 | | 200.0410 | 31.46 | -13.00 | 18.46 | 43.50 | -25.04 | QP | | | |
| 4 | | 376.5810 | 28.50 | -8.52 | 19.98 | 46.00 | -26.02 | QP | | | |
| 5 | * | 929.3840 | 29.41 | 1.00 | 30.41 | 46.00 | -15.59 | QP | | | |
| 6 | | 973.2280 | 28.79 | 1.84 | 30.63 | 54.00 | -23.37 | QP | | | |

*:Maximum data x:Over limit !:over margin Operator: ZL

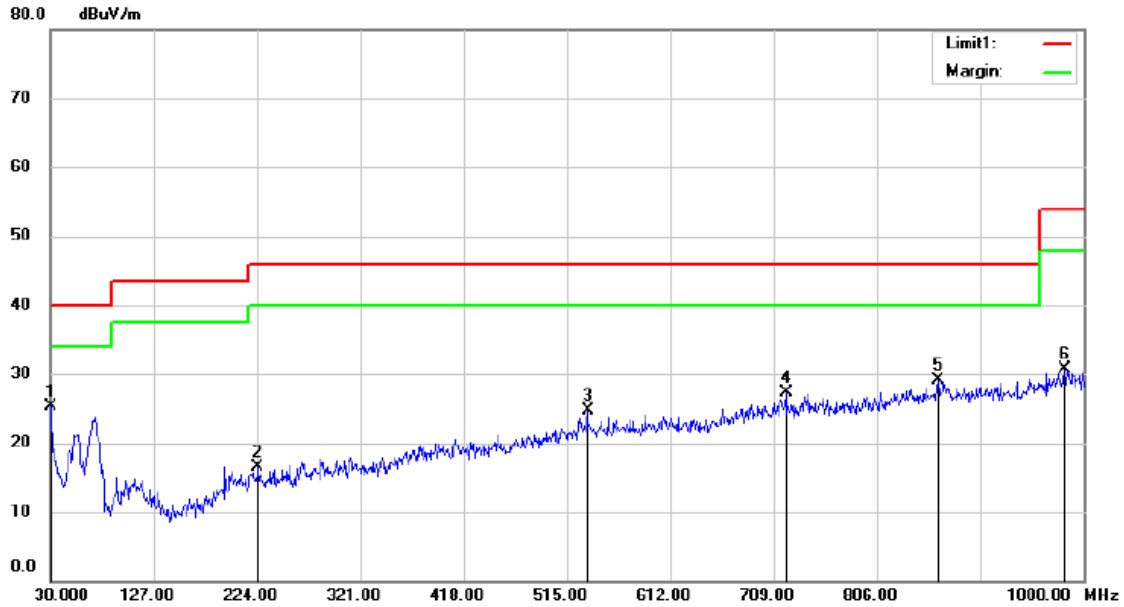


Site 3m Chamber #3 Polarization: ***Vertical*** Temperature: 22.5 C

Limit: (RE)FCC PART 15 C Power: AC 120V/60Hz Humidity: 61 %

Mode: ZIGBEE HIGH

Note:

| No. | Mk. | Freq. | Reading Level | Correct Factor | Measure-ment | Limit | Over | | Antenna Height | Table Degree | |
|---|---|---|---|---|---|---|---|---|---|---|---|
| | | MHz | dBuV | dB | dBuV/m | dBuV/m | dB | Detector | cm | degree | Comment |
| 1 | * | 30.2910 | 41.42 | -16.04 | 25.38 | 40.00 | -14.62 | QP | | | |
| 2 | | 225.2610 | 29.46 | -13.04 | 16.42 | 46.00 | -29.58 | QP | | | |
| 3 | | 535.1760 | 29.85 | -5.19 | 24.66 | 46.00 | -21.34 | QP | | | |
| 4 | | 720.8340 | 29.03 | -1.76 | 27.27 | 46.00 | -18.73 | QP | | | |
| 5 | | 863.3270 | 28.39 | 0.73 | 29.12 | 46.00 | -16.88 | QP | | | |
| 6 | | 983.4130 | 28.31 | 2.42 | 30.73 | 54.00 | -23.27 | QP | | | |

*:Maximum data x:Over limit !:over margin Operator: ZL

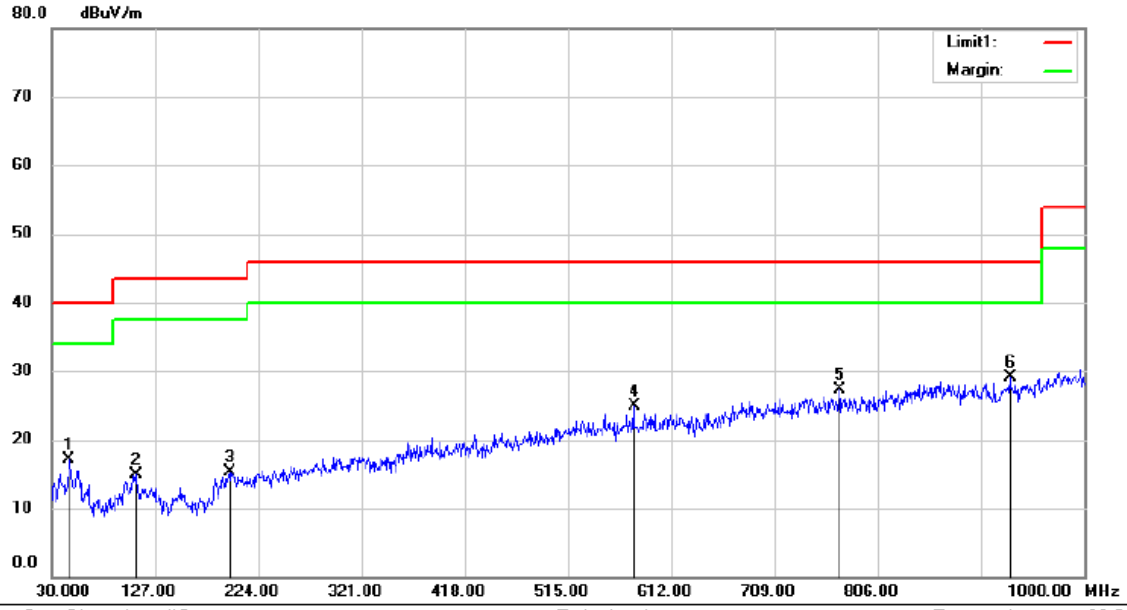


Site 3m Chamber #3 Polarization: ***Horizontal*** Temperature: 22.5 C

Limit: (RE)FCC PART 15 C Power: AC 120V/60Hz Humidity: 61 %

Mode:ZIGBEE HIGH

Note:

| No. | Mk. | Freq. | Reading Level | Correct Factor | Measure-ment | Limit | Over | | Antenna Height | Table Degree | |
|---|---|---|---|---|---|---|---|---|---|---|---|
| | | MHz | dBuV | dB | dBuV/m | dBuV/m | dB | Detector | cm | degree | Comment |
| 1 | | 47.0720 | 30.21 | -13.15 | 17.06 | 40.00 | -22.94 | QP | | | |
| 2 | | 109.5400 | 29.25 | -14.40 | 14.85 | 43.50 | -28.65 | QP | | | |
| 3 | | 197.5190 | 28.76 | -13.47 | 15.29 | 43.50 | -28.21 | QP | | | |
| 4 | | 577.3710 | 29.83 | -4.87 | 24.96 | 46.00 | -21.04 | QP | | | |
| 5 | | 770.6920 | 28.61 | -1.36 | 27.25 | 46.00 | -18.75 | QP | | | |
| 6 | * | 930.7420 | 28.13 | 0.99 | 29.12 | 46.00 | -16.88 | QP | | | |

*:Maximum data x:Over limit !:over margin Operator: ZL

## 8.6 CONDUCTED EMISSIONS TEST

Applicable Standard

According to FCC Part 15.207(a)

Conformance Limit

| Conducted Emission Limit | | |
|---|---|---|
| Frequency(MHz) | Quasi-peak | Average |
| 0.15-0.5 | 66-56 | 56-46 |
| 0.5-5.0 | 56 | 46 |
| 5.0-30.0 | 60 | 50 |

Note: 1. The lower limit shall apply at the transition frequencies
2. The limit decreases in line with the logarithm of the frequency in the range of 0.15 to 0.50MHz.

Test Configuration

Test according to clause 7.3 conducted emission test setup

Test Procedure

The EUT was placed on a table which is 0.8m above ground plane.
Maximum procedure was performed on the highest emissions to ensure EUT compliance.
Repeat above procedures until all frequency measured were complete.

Test Results

Pass
The 120V &240V voltagehave been tested, and the worst result recorded was report as below:

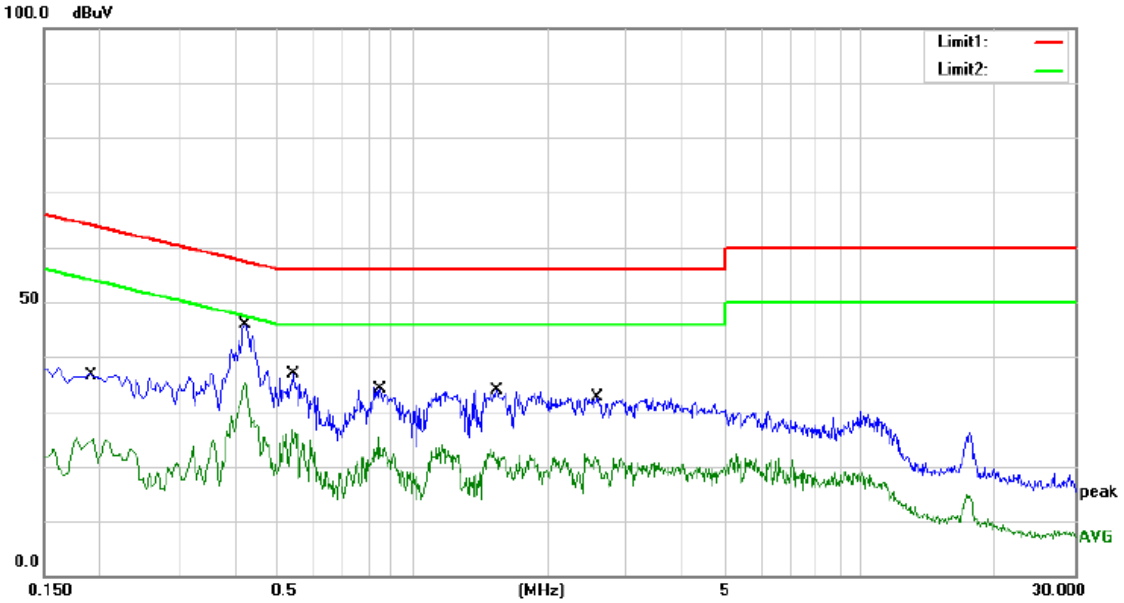


Site Conduction #2 Phase: L1 Temperature: 23.7

Limit: (CE)FCC PART 15 class B_QP Power: AC 120V/60Hz Humidity: 41 %

Mode: ON

Note:

| No. | Mk. | Freq. | Reading Level | Correct Factor | Measure-ment | Limit | Over | | |
|---|---|---|---|---|---|---|---|---|---|
| | | MHz | dBuV | dB | dBuV | dBuV | dB | Detector | Comment |
| 1 | | 0.1940 | 28.29 | 9.90 | 38.19 | 63.86 | -25.67 | QP | |
| 2 | | 0.1940 | 15.24 | 9.90 | 25.14 | 53.86 | -28.72 | AVG | |
| 3 | * | 0.4220 | 35.90 | 9.92 | 45.82 | 57.41 | -11.59 | QP | |
| 4 | | 0.4220 | 25.43 | 9.92 | 35.35 | 47.41 | -12.06 | AVG | |
| 5 | | 0.5420 | 27.05 | 9.92 | 36.97 | 56.00 | -19.03 | QP | |
| 6 | | 0.5420 | 16.79 | 9.92 | 26.71 | 46.00 | -19.29 | AVG | |
| 7 | | 0.8420 | 24.45 | 9.92 | 34.37 | 56.00 | -21.63 | QP | |
| 8 | | 0.8420 | 15.50 | 9.92 | 25.42 | 46.00 | -20.58 | AVG | |
| 9 | | 1.5420 | 23.91 | 9.93 | 33.84 | 56.00 | -22.16 | QP | |
| 10 | | 1.5420 | 14.00 | 9.93 | 23.93 | 46.00 | -22.07 | AVG | |
| 11 | | 2.5900 | 22.60 | 9.94 | 32.54 | 56.00 | -23.46 | QP | |
| 12 | | 2.5900 | 12.31 | 9.94 | 22.25 | 46.00 | -23.75 | AVG | |

*:Maximum data x:Over limit !:over margin Comment: Factor build in receiver. Operator: KK

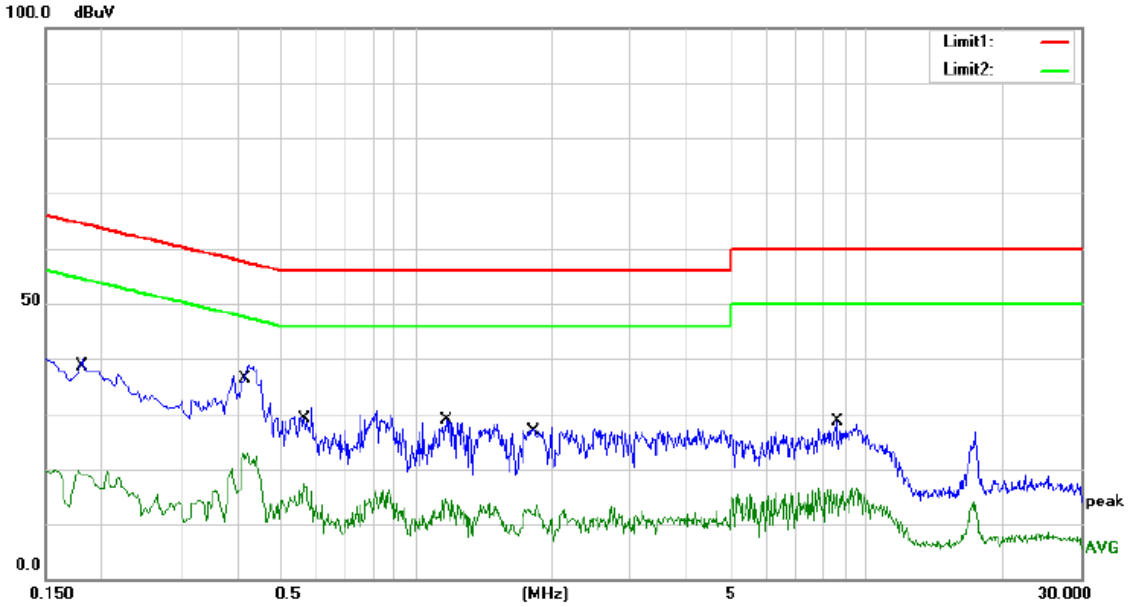


Site Conduction #2 Phase: N Temperature: 23.7

Limit: (CE)FCC PART 15 class B_QP Power: AC 120V/60Hz Humidity: 41 %

Mode: ON

Note:

| No. | Mk. | Freq. | Reading Level | Correct Factor | Measure-ment | Limit | Over | | |
|---|---|---|---|---|---|---|---|---|---|
| | | MHz | dBuV | dB | dBuV | dBuV | dB | Detector | Comment |
| 1 | | 0.1780 | 29.88 | 9.90 | 39.78 | 64.58 | -24.80 | QP | |
| 2 | | 0.1780 | 10.08 | 9.90 | 19.98 | 54.58 | -34.60 | AVG | |
| 3 | * | 0.4140 | 29.07 | 9.92 | 38.99 | 57.57 | -18.58 | QP | |
| 4 | | 0.4140 | 13.06 | 9.92 | 22.98 | 47.57 | -24.59 | AVG | |
| 5 | | 0.5660 | 21.21 | 9.92 | 31.13 | 56.00 | -24.87 | QP | |
| 6 | | 0.5660 | 7.58 | 9.92 | 17.50 | 46.00 | -28.50 | AVG | |
| 7 | | 1.1620 | 19.02 | 9.93 | 28.95 | 56.00 | -27.05 | QP | |
| 8 | | 1.1620 | 4.72 | 9.93 | 14.65 | 46.00 | -31.35 | AVG | |
| 9 | | 1.8580 | 17.80 | 9.93 | 27.73 | 56.00 | -28.27 | QP | |
| 10 | | 1.8580 | 3.53 | 9.93 | 13.46 | 46.00 | -32.54 | AVG | |
| 11 | | 8.6100 | 18.61 | 10.00 | 28.61 | 60.00 | -31.39 | QP | |
| 12 | | 8.6100 | 6.65 | 10.00 | 16.65 | 50.00 | -33.35 | AVG | |

*:Maximum data x:Over limit !:over margin Comment: Factor build in receiver. Operator: KK

## 8.7 ANTENNA APPLICATION

Antenna Requirement

| Standard | Requirement |
|---|---|
| FCC CRF Part 15.203 | An intentional radiator shall be designed to ensure that no antenna other than that furnished by the responsible party shall be used with the device. The use of a permanently attached antenna or of an antenna that uses a unique coupling to the intentional radiator shall be considered sufficient to comply with the provisions of this section. The manufacturer may design the unit so that a broken antenna can be replaced by the user, but the use of a standard antenna jack or electrical connector is prohibited. This requirement does not apply to carrier current devices or to devices operated under the provisions of §15.211, §15.213, §15.217, §15.219, or §15.221. Further, this requirement does not apply to intentional radiators that must be professionally installed, such as perimeter protection systems and some field disturbance sensors, or to other intentional radiators which, in accordance with §15.31(d), must be measured at the installation site. However, the installer shall be responsible for ensuring that the proper antenna is employed so that the limits in this part are not exceeded. |

For intentional device, according to FCC 47 CFR Section 15.203, an intentional radiator shall be designed to ensure that no antenna other than that furnished by the responsible party shall be used with the device. And according to FCC 47 CFR Section 15.247 (b), if transmitting antennas of directional gain greater than 6dBi are used, the power shall be reduced by the amount in dB that the directional gain of the antenna exceeds 6dBi.

Result

PASS.

The EUT has 1 antenna: a FPC Antenna for ZigBee, the gain is 3.35 dBi;

Note: ☒ Antenna use a permanently attached antenna which is not replaceable.
☐ Not using a standard antenna jack or electrical connector for antenna replacement
☐ The antenna has to be professionally installed (please provide method of installation)

which in accordance to section 15.203, please refer to the internal photos.

Detail of factor for radiated emission

| Frequency(MHz) | Ant_F(dB) | Cab_L(dB) | Preamp(dB) | Correct Factor(dB) |
|---|---|---|---|---|
| 0.009 | 20.6 | 0.03 | \ | 20.63 |
| 0.15 | 20.7 | 0.1 | \ | 20.8 |
| 1 | 20.9 | 0.15 | \ | 21.05 |
| 10 | 20.1 | 0.28 | \ | 20.38 |
| 30 | 18.8 | 0.45 | \ | 19.25 |
| | | | | |
| 30 | 11.7 | 0.62 | 27.9 | -15.58 |
| 100 | 12.5 | 1.02 | 27.8 | -14.28 |
| 300 | 12.9 | 1.91 | 27.5 | -12.69 |
| 600 | 19.2 | 2.92 | 27 | -4.88 |
| 800 | 21.1 | 3.54 | 26.6 | -1.96 |
| 1000 | 22.3 | 4.17 | 26.2 | 0.27 |
| | | | | |
| 1000 | 25.6 | 1.76 | 41.4 | -14.04 |
| 3000 | 28.9 | 3.27 | 43.2 | -11.03 |
| 5000 | 31.1 | 4.2 | 44.6 | -9.3 |
| 8000 | 36.2 | 5.95 | 44.7 | -2.55 |
| 10000 | 38.4 | 6.3 | 43.9 | 0.8 |
| 12000 | 38.5 | 7.14 | 42.3 | 3.34 |
| 15000 | 40.2 | 8.15 | 41.4 | 6.95 |
| 18000 | 45.4 | 9.02 | 41.3 | 13.12 |
| | | | | |
| 18000 | 37.9 | 1.81 | 47.9 | -8.19 |
| 21000 | 37.9 | 1.95 | 48.7 | -8.85 |
| 25000 | 39.3 | 2.01 | 42.8 | -1.49 |
| 28000 | 39.6 | 2.16 | 46.0 | -4.24 |
| 31000 | 41.2 | 2.24 | 44.5 | -1.06 |
| 34000 | 41.5 | 2.29 | 46.6 | -2.81 |
| 37000 | 43.8 | 2.30 | 46.4 | -0.3 |
| 40000 | 43.2 | 2.50 | 42.2 | 3.5 |

--------- END OF REPORT --------