KUM1000-MA0-03

AUG 23, 2019

LAON Technology Co., Ltd.

Revisions

Date	Version	Prepared by	Descriptions
AUG 23, 2019	1.0		Initial edition

- Contents -

1. Overview 4
1.1. Features and Functions 4
2. Specifications 5
2.1. "MA0-03" specifications 5
2.2. Pin Maps (System Interface) 7
3. Product applications and cases 11
3.1. Product applications 11
3.2. Application cases 11
3.2.1. System usages 12
4. Block Diagram 13
5. Operating Description 14
6. Parts Layout 16
6.1. Parts Layout (Front) 16
6.2. Parts Layout (Rear) 17
7. RF Shield Method 18
8. Label 19
8.1. Product Label & LABEL LOCATION 19

1. Overview

1.1. Features and Functions

LAON Technology('LAON')'s KUM1000-MA0-03("MA0-03") has been designed to meet IEEE 802.11a standard specification requirements adopting 5.0GHz band which provides sufficient number of usable channels for smooth full-duplex audio communications with less frequency interferences.

"MA0-03" is LAON's all-in-one SoC ("KUM1000") based RF module and Media Access Control ('MAC') chip and Baseband Processor ('BBP') are all combined in the SoC.

"MA0-03" provides a designated internal flash memory for various parameters set up and download of the control-related operating software. It is designed to use with the relevant application devices not applying an extra external CPU as it, by its own CPU, supports external interfaces such as UART, SPI, I2C and GPIO.

Also, 'Direct Conversion' is applied which is a method to direct convert the Baseband signals from BBP to RF signals and it supports switching function and etc to implement 'Diversity' capability.

2. Specifications

2.1. "MA0-03" specifications

No	Parameters	Specifications	Remarks
1	Frequency Band	- 5170MHz ~ 5250MHz [1] - 5250MHz ~ 5330MHz [2] - 5490MHz ~ 5710MHz [3]	Refer to 'Channel ID'
2	Channel Band Width	20MHz	
3	Wireless Media	OFDM	
4	Modulation	BPSK : 6Mbps	
		QPSK : 12Mbps	
		16-QAM : 36MbPs	
5	Data Rate	6Mbps,12Mbps,36Mbps	
6	Transmitted Power	- +26dBm(Max.)@EIRP	Peak Power
7	Receiving Sensitivity	-80dBm @ 36Mbps	
8	Frequency Tolerance	± 20ppm	
9	Chipset	LAON Technology (KUM1000)	
10	Operation voltage	3.3V ± 5%, 5.0V ± 5%,	
11	Power consumption	Master Mode : 550mA MAX,3.3V@TX 200mA MAX,5.0V@TX	
		Slave Mode : 300mA MAX,3.3V@TX 200mA MAX,5.0V@TX	
12	Dimension (W x H x D)	58mm x 20mm x 6mm	
13	Operation temperature	0℃ ~ +50℃	
14	Storage temperature	-20℃ ~ +70℃	
15	Antenna Interface[4]	2 x CMJ(U.FL compatible) Connector	
16	System Interface	2 x 04-6296-051-931846 Connector	

*1: To see the correct properties of "MA0-03", it is required to measure after approx. 1 minute from the power supply.

[1] Channel ID : 36,40,44,48
[2] Channel ID : 52,56,60,64
[3] Channel ID : 100,104,108,112,116,120,124,128,132,136,140
[4] CON4 : TX,RX Port , CON3 : RX Port

The channels and frequency bandwidths currently being used by "MA0-02" are as following tables.

1) Frequency band: 5170~5250MHz

No.	LaON Channel	WiFi Channel ID	Center Freq.	Freq. Range	Remarks
1	2	36	5180 MHz	5170~5190 MHz	
2	3	40	5200 MHz	5190~5120 MHz	
3	4	44	5220 MHz	5210~5230 MHz	
4	5	48	5240 MHz	5230~5250 MHz	

2) Frequency band: 5250~5330MHz

No.	LaON Channel	WiFi Channel ID	Center Freq.	Freq. Range	Remarks
1	6	52	5260 MHz	5250~5270 MHz	
2	7	56	5280 MHz	5270~5290 MHz	
3	8	60	5300 MHz	5290~5310 MHz	
4	9	64	5320 MHz	5310~5330 MHz	

3) Frequency band : 5490~5710MHz

No.	LaON Channel	WiFi Channel ID	Center Freq.	Freq. Range	Remarks
1	12	100	5500 MHz	5490~5510 MHz	DFS
2	13	104	5520 MHz	5510~5530 MHz	DFS
3	14	108	5540 MHz	5530~5550 MHz	DFS
4	15	112	5560 MHz	5550~5570 MHz	DFS
5	16	116	5580 MHz	5570~5590 MHz	DFS
6	17	120	5600 MHz	5590~5610 MHz	DFS
7	18	124	5620 MHz	5610~5630 MHz	DFS

8	19	128	5640 MHz	5630~5650MHz	DFS
9	20	132	5660 MHz	5650~5670 MHz	DFS
10	21	136	5680 MHz	5670~5690 MHz	DFS
11	22	140	5700 MHz	5690~5710 MHz	DFS

2.2. Pin Maps (System Interface)

1) CON1 : Connector : 04-6296-051-931846

1-1. Audio Input, Output			
Pin No	Pin Name	Type[5]	Description
1	SYS Clock	O	Codec Main Clock
3	LRCK	O	Data Bit clock
5	BCK	O	Data Sampling Clock
7	Sdin 1	I	Data Input: Mic In#1
9	Sdout 1	O	Data Output:1
11	Sdout 2	O	Data Output:2
13	Sdin 2	I	Data Input: Mic In#2
1-2. Codec Reset / GPIO			
15	Reset-1	O	Reset_1 /GPIO1
17	Reset-2	O	Reset_2 /GPIO2
19	Reset-3	O	Reset_3 /GPIO3
21	Reset-4	O	Reset-4 /GPIO4
23	Reset-5	O	Reset-5 /GPIO5
25	Reset-6	O	Reset-6 /GPIO6
27	Reset-7	O	Reset-7 /GPIO7
29	Reset-8	O	Reset-8 /GPIO8
31	Sdin 3	I	Data Input: Mic In#3
33	Reset-10	O	Reset-10 /GPIO10
35	Reset-11	O	Reset-11 /GPIO11
37	Reset-tx	O	Tx_reset : 1 /GPIO12
1-3. I2C			
39	I2C_SCL	O	I^2C Clock /GPIO13
41	I2C_SDA	B	I^2C Data /GPIO14

[5] O : Output / I : Input / B : Input, Output / AI : Analog Input

43	I2C_EN	O	I^2C Enable /GPIO15
45	Ni-MH Input	AI	Battery Monitoring
47	GND		

- Pin Maps Continued (CON1)

1-4. UART2, SPI Interface(4-Wire)			
Pin No	Pin Name	Type[6]	Description
49	UART_Tx2	O	UART2_Tx /GPIO16
51	UART_Rx2	I	UART2_Rx /GPIO17
2	SPI_CSB(1)	B	GPIO18
4	SPI_CLK(1)	B	GPIO19
6	SPI_MOSI(1)	B	GPIO20
8	SPI_MISO(1)	B	GPIO21
1-5. UART1			
10	UART_Tx1	O	UART 1 Tx
12	UART_Rx1	I	UART 1 Rx
14	Sdin 4	I	Data Input: Mic In#4
1-6. JTAG, Reset			
16	TMS	I	Test Mode Select
18	TDO	O	Test Data Out
20	TCLK	I	Test Clock
22	TDI	I	Test Data In
24	nTRST	I	Reset / Active Low
1-7. Flash Memory			
26	Flash_ext_SI	O	Flash_Serial Input
28	Flash_ext_SO	I	Flash_Serial Output
30	Sdin 5	I	Data Input: Mic In#5
32	Sdin 6	I	Data Input: Mic In#6
34	Flash_ext_CLK	O	Flash_Serial Clock
36	Flash_ext_CE	O	Flash_Chip Select
1-8. Power			
38	VCC		VCC +3.3V / Max : 0.6A

[6] O : Output / I : Input / B : Input, Output / AI : Analog Input

40	VCC		VCC +3.3V
42	VCC		VCC +3.3V
44	VCC		VCC +3.3V
46	GND		
48	GND		
50	GND		

2) CON2 : Connector : 04-6296-051-931846

2-1. Codec In / Out			
Pin No	Pin Name	Type[7]	Description
1	Sdout 3	O	Data Output:3
3	Reset-9	I	Reset-9 /GPIO9
5	Test Pattern Output	O	
7	Flash_ext_RST	O	Flash Reset
9	Flash_ext_WP	O	Flash_Write Protect
11	Sdout 4	O	Data Output:4
13	Sdout 5	O	Data Output:5
15	Sdout 6	O	Data Output:6
17	Sdout 7	O	Data Output:7
19	Sdout 8	O	Data Output:8
21	Sdout 9	O	Data Output:9
23	Sdout 10	O	Data Output:10
25	Sdout 11	O	Data Output:11
2-2. Frame Bus Control			
27	FRM_bus0	O	Frame Bus [0..5]
29	FRM_bus1	O	
31	FRM_bus2	O	
33	FRM_bus3	O	
35	FRM_bus4	O	
37	FRM_bus5	O	
39	FRM0	O	Frame0
41	EXT_SYNC_IN	I	
43	EXT_SYNC_OUT	O	

[7] O : Output / I : Input / B : Input, Output / AI : Analog Input

45	CLK_20MHz	O	
47	ETH_WE	O	
49	ETH_RD	O	
51	ETH_CE	O	

- Pin Maps Continued (CON2)

2-3. Ethernet Address			
Pin No	Pin Name	Type[8]	Description
2	Address0	I	TCP/IP Address[0..13]
4	Address1	I	
6	Address2	I	
8	Address3	I	
10	Address4	I	
12	Address5	I	
14	Address6	I	
16	Address7	I	
18	Address8	I	
20	Address9	I	
22	Address10	I	
24	Address11	I	
26	Address12	I	
28	Address13	I	
2-4. Ethernet Data			
30	Data0	B	TCP/IP Data [0..7]
32	Data1	B	
34	Data2	B	
36	Data3	B	
38	Data4	B	
40	Data5	B	
42	Data6	B	
44	Data7	B	

[8] O : Output / I : Input / B : Input, Output / AI : Analog Input

2-5. UART2			
46	UART_Tx2	O	UART2_Tx /GPIO16
48	UART_Rx2	I	UART2_Rx /GPIO17
50	GND		

3. Product applications and cases

3.1. Product applications

"MA0-03" has been developed with a focus on miniaturization in view of various applications that require even compact and portable devices. It is an industry wide solution that the main applications include wireless microphones, conferences, interpretations, wireless intercom systems, security at construction sites and etc.

The wireless microphones and intercoms can also be applied for large-sized restaurants, family restaurants, Fast food restaurants, drive-thru, health care and sports gyms, churches and schools for civilian industries.

3.2. Application cases

Below image is a LAON's wireless intercom system and "MA0-03" is built in the Base Station product, Remote Base Station(RBS) product and Belt Pack product each for wireless links.

Base Station

3.2.1. System usages

Below is a system configuration example in indoor to fill the blind spots or halls of wireless coverage using the Base Station(in the middle of the image below) and UTP Cable. Using this system enables audio communications even in blind areas and supports fully flexible scalability to expand wireless coverage regardless of the places within the network.

"MA0-02" is built in each product which is indicated in red in below figure, to enable the devices wireless audio signal transmissions for wireless sections.

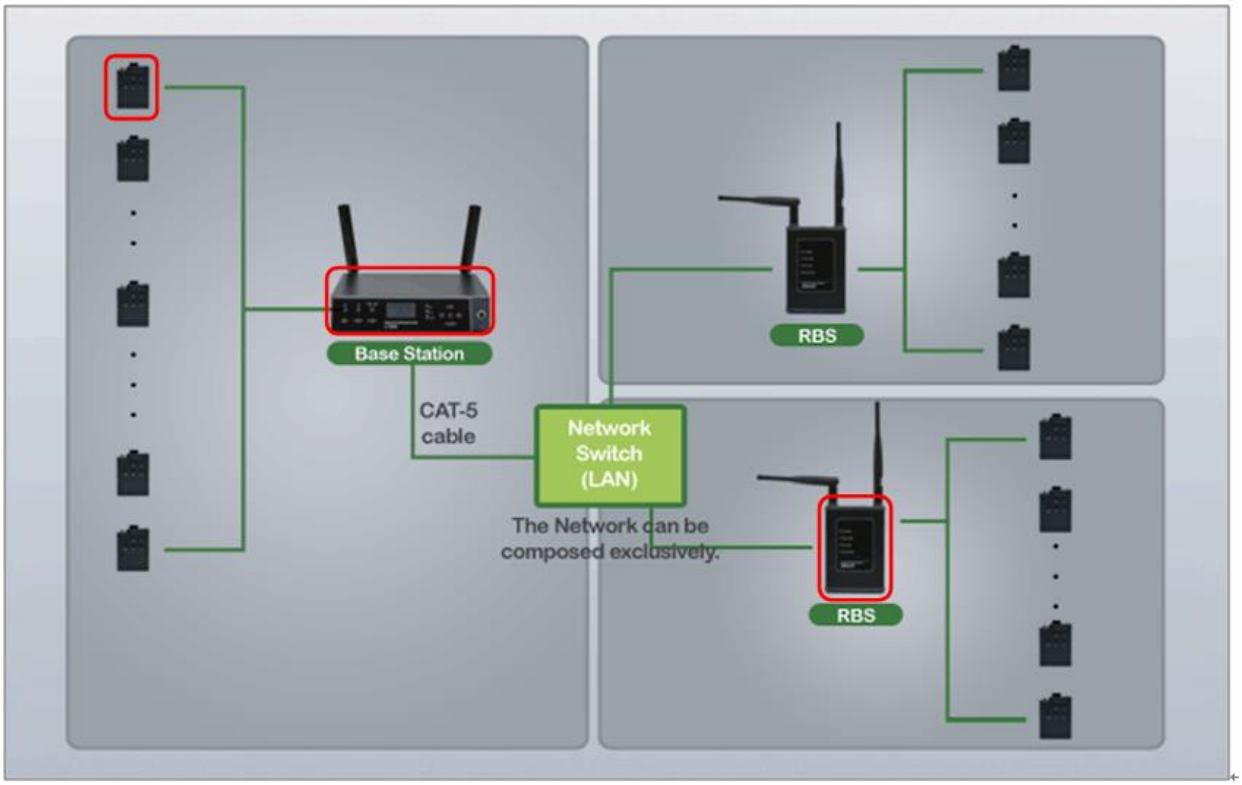

4. Block Diagram

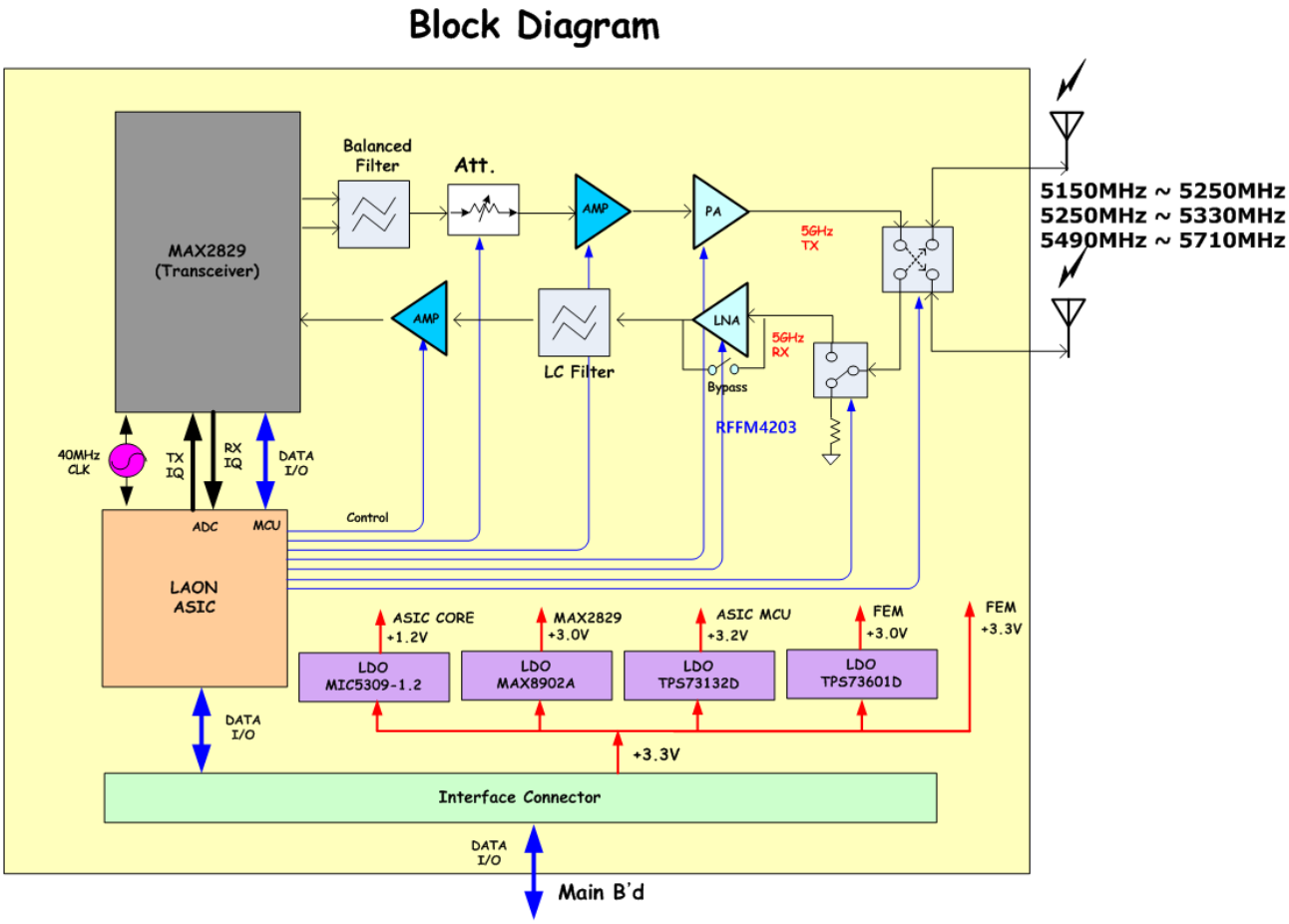

5. Operating Description

1) Operating Frequency Range

Operating Frequency Range is that :

- 1st Band : 5150MHz ~ 5250MHz
- 2nd Band : 5250MHz ~ 5330MHz
- 3rd Band : 5490MHz ~ 5710MHz

2) MAX2829 IC

It performs modulation function to send DATA after generating 5GHz TX frequency required by LAON ASIC MCU control. It also performs the ability to amplify the desired RF POWER LEVEL in DRIVE AMP.

It also performs the function of demodulating the RX frequency received from the antenna and LNA as an IQ signal. 40MHz CLOCK is supplied.

3) LAON ASIC IC

It performs the function of converting the RX IQ signal received from MAX2829 to DATA and the function of converting TX DATA to an IQ signal. The built-in MCU function also performs the control function of the KUM1000-MA0-03. It also performs the TX/RX cycle signal supply function and The TX AMP/RX AMP ON/OFF function. 40MHz CLOCK is supplied

4) DC/DC Converter

It receives + 3.3V from Interface Connector and supplies the 3.3V / 1.2V power necessary for the IC.

5) TX Path

The 5GHz TX frequency supplied by the MAX2829 is amplified by the driver AMP into amplifiable LEVEL in the PA. The POWER AMP is amplified by about 26 dBm and the switch radiates into the air through the antenna. The switch is controlled by the TX / RX signal provided on the Laon ASIC. POWER AMP LEVEL using RF attenuator is also attenuated to 3dB, 6dB, 9dB and 12dB.

6) RX Path

The 5GHz frequency received from the antenna is amplified by the LOW NOISE AMP through

a switch that is operated only during the RX cycle. It is amplified from the DRIVER AMP to a demodulator level on the MAX2829. It also uses 5GHz BPF to eliminate unnecessary frequencies.

6. Parts Layout

6.1. Parts Layout (Front)

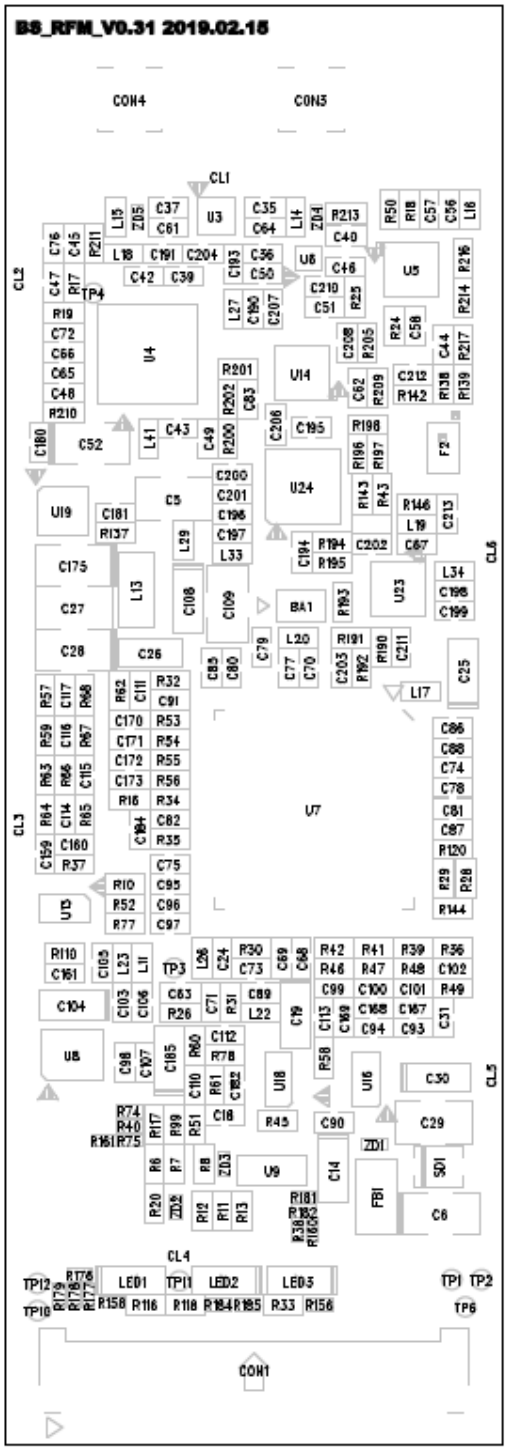

6.2. Parts Layout (Rear)

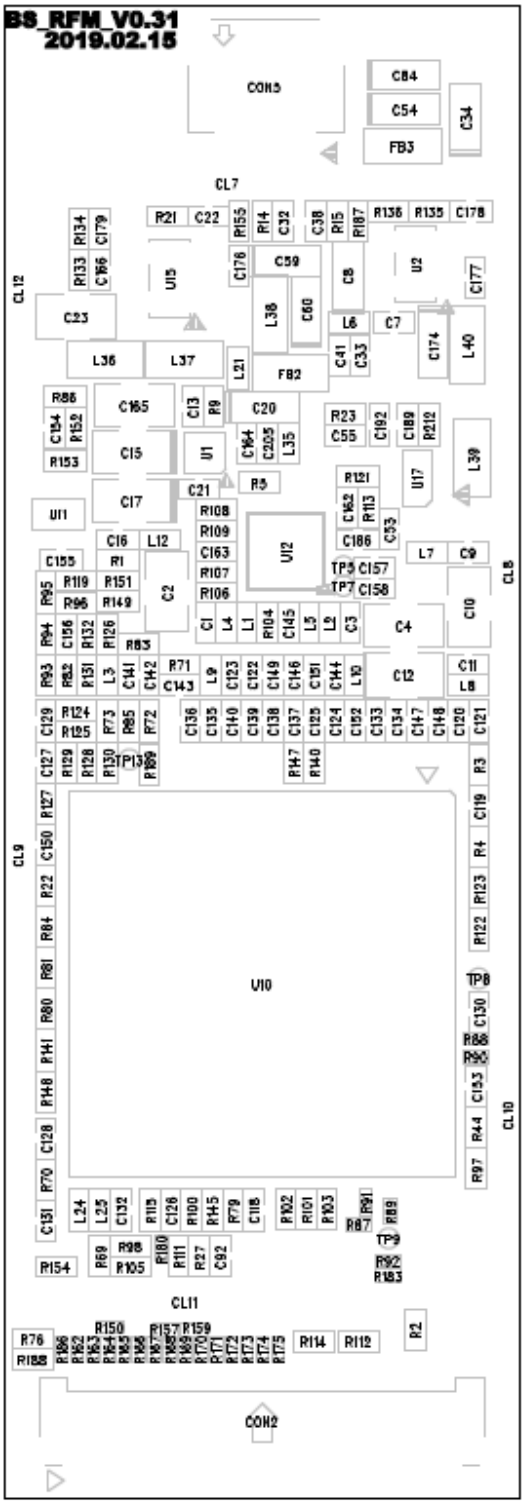

7. RF Shield Method

Use RF shield can as the RF shield method.

- **Shield can Size** : 19 X 43.5 X 2 mm
- The RF module is protected by a shield can. The shield can not be removed by hand without tools. The shield can is tightly sealed. It is designed to be opened only with sharp tools such as tweezers.

8. Label

8.1. Product Label & LABEL LOCATION

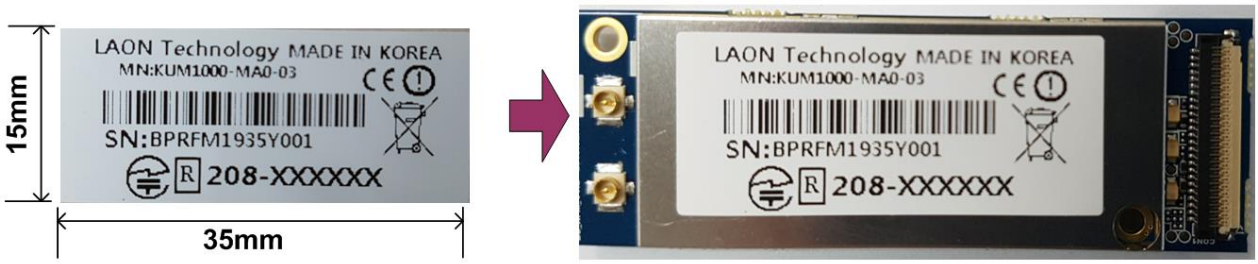

- **Size** : 35 X 15 mm
- **Contents**
  - Model : KUM1000-MA0-03
  - Manufacture : LAON Technology
  - SN : BPRFMXXXXY001 or BSRFMXXXXY001
  - MADE IN KOREA

FCC Information to User

This equipment has been tested and found to comply with the limits for a Class B digital device, pursuant to Part 15 of the FCC Rules. These limits are designed to provide reasonable protection against harmful interference in a residential installation. This equipment generates, uses and can radiate radio frequency energy and, if not installed and used in accordance with the instructions, may cause harmful interference to radio communications. However, there is no guarantee that interference will not occur in a particular installation. If this equipment does cause harmful interference to radio or television reception, which can be determined by turning the equipment off and on, the user is encouraged to try to correct the interference by one of the following measures:

- Reorient or relocate the receiving antenna.
- Increase the separation between the equipment and receiver.
- Connect the equipment into an outlet on a circuit different from that to which the receiver is con−nected.
- Consult the dealer or an experienced radio/TV technician for help.

Caution

Modifications not expressly approved by the party responsible for compliance could void the user’ s authority to operate the equipment.

FCC Compliance Information : This device complies with Part 15 of the FCC Rules. Operation is subject to the following two conditions: (1) This device may not cause harmful interference, and (2) this device must accept any interference received, including interference that may cause undesired operation.