Motion Sensor – Zigbee 3.0

No: 341277 10/20

Installation Instructions

Catalog Number: WZ3S3C100

Country of Origin: Made in China

WZ3S3C100
Motion Sensor

SAFETY INFORMATION

WARNING: Keep batteries away from children at all times. This product contains a coin/button style cell battery and, if swallowed, can cause severe internal burns within 2 hours of ingesting and can lead to death. Keep away from infants and small children at all times. If battery is swallowed or comes incontact with the inside of the body, immediately seek emergency medical attention. If the battery is replaced by an incorrect size, there is a risk of the battery erupting and causing injury. Dispose of used battery promptly, when it has been removed.

CHOKING HAZARD: Keep batteries and any small parts away from infants and small children at all times. This item is not a toy and should not be given to children.

IMPORTANT: Do not expose to wet conditions. Periodically check the condition and security of the batteries.

INSTALLATION

IMPORTANT:

- Avoid obstructing the sensor
- Avoid installation near air-conditioners, electric fans, refrigerators, ovens or other places where temperature fluctuates
- Install indoors
- Use 3/16” drill bit for drywall anchors

Mount Sensor:

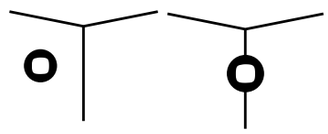

Wall Mount **Corner Wall Mount**

Motion sensor can be mounted on wall or corners.

Install 8-9 feet above the floor. The detection range will be 16 feet with a 110° view angle. If mounted at a lower height, the detection range may be decreased.

For both Wall Mount and Corner Wall Mount

Securely affix the mounting bracket with either the screws (and drywall anchors, if needed) or double-sided tape.

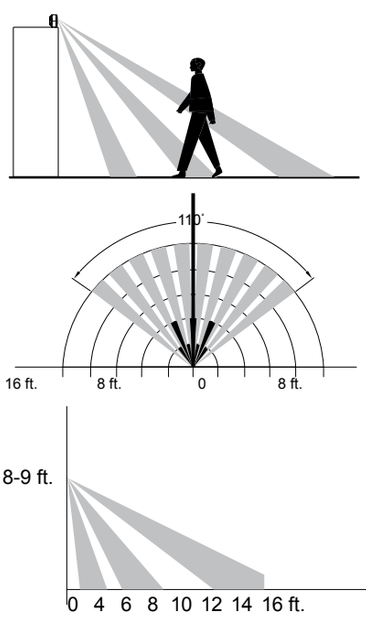

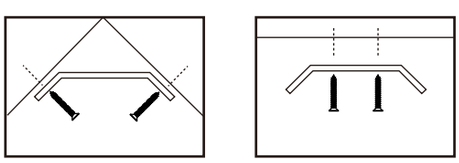

Corner **Flat Surface**

Set Up Your System

This sensor is designed to work with a Zigbee hub. Loosen battery cover screw and pull tab to connect the battery, then retighten screw. The LED indicator will flash once per second to indicate commissioning mode. If not, press and hold the reset button for 3 seconds. Follow the instructions

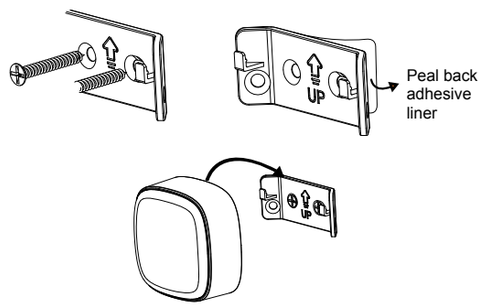

Proper screw locations for wall-mount installation

from your hub to commission the device. If the sensor is enrolled successfully, the LED will stop blinking and stay on for 10 seconds and then turn off.

Attach sensor to bracket.

For more information on this product please see this link, or scan the QR code.

https://www.legrand.us/radiant/products/smart-lighting/wz3s3c100.aspx

TROUBLESHOOTING

Offline After Installation

If sensors are listed as offline in the app after installation, they may be too far from the Hub. You can try to put them closer to the the Hub.

If the sensor is not working, make sure the battery has power and it is installed with the “+” side facing up to battery cover. Replace the battery if needed.

False Alarm

The following may cause unintended alarms:

- Animals that walk, climb or fly in front of motion sensor.
- Heat sources like electric heaters, heat vents and fireplaces.
- Cold sources like drafty windows, air conditioners and AC vents.
- Curtains near windows that may move while the system is armed.
- Direct sun exposure: the front of motion sensor should not be placed in direct sunlight.

Tamper Alarm

When the sensor is removed from the bracket it can trigger the anti-tamper alarm and send out a tamper notification. Be sure that the sensor is securely attached to the bracket to avoid false notifications.

MAINTENANCE

Reset to Factory Settings

Press and hold the reset switch for 3 seconds. The LED indicator will start blinking quickly, the sensor will reset to factory settings and the LED indicator will flash once per second to indicate commissioning mode.

Battery Replacement

The app will notify you when a device’s battery gets low. To replace the battery, please disarm the system first to avoid unintended tamper alarm.

Step 1: Disarm the system.

Step 2: Remove the sensor from the bracket.

Step 3: Loosen the screw on the battery cover. Open the battery cover.

Step 4: Remove the old battery and replace with new CR2032 battery.

Step 5: Close the battery cover. Tighten the screw for the battery cover.

Step 6: Hang the sensor on the bracket.

COMPLIANCE INFORMATION

FCC ID: 2AU5D8ASSZAH0
IC: 25764-8ASSZAH0

This device complies with Part 15 of the FCC Rules. Operation is subject to the following two conditions: (1) this device may not cause harmful interference, and (2) this device must accept any interference received, including interference that may cause undesired operation.

FCC Caution: Changes or modifications not expressly approved by the part responsible for compliance could void the user’s authority to operate the equipment.

FCC Statement: This equipment has been tested and found to comply with the limits for a Class B digital device, pursuant to part 15 of the FCC Rules. These limits are designed to provide reasonable protection against harmful interference in a residential installation. This equipment generates, uses and can radiate radio frequency energy and, if not installed and used in accordance with the instructions, may cause harmful interference to radio communications. However, there is no guarantee that interference will not occur in a particular installation. If this equipment does cause harmful interference to radio or television reception, which can be determined by turning the equipment off and on, the user is encouraged to try to correct the interference by one or more of the following measures:

- Reorient or relocate the receiving antenna.
- Increase the separation between the equipment and receiver.
- Connect the equipment into an outlet on a circuit different from that to which the receiver is connected.
- Consult the dealer or an experienced radio/TV technician for help.

This equipment complies with FCC radiation exposure limits set forth for an uncontrolled environment. This equipment should be installed and operated with a minimum distance of 20cm between the radiator and any part of your body.:

FCC Radiation Exposure Statement:

This equipment complies with FCC radiation exposure limits set forth for an uncontrolled environment. This equipment should be installed and operated with minimum distance 20cm between the radiator & your body.

ISED Statement

This Class [B] digital apparatus complies with Canadian CAN ICES-3(B).

Cet appareil numérique de la classe [B] est conforme à la norme NMB-3(B)du Canada.

This device contains licence-exempt transmitter(s)/receiver(s) that comply with Innovation, Science and Economic Development Canada’s licence-exempt RSS(s).

Operation is subject to the following two conditions:

1. This device may not cause interference.
2. This device must accept any interference, including interference that may cause undesired operation of the device.

L’émetteur/récepteur exempt de licence contenu dans le présent appareil est conforme aux CNR d’Innovation, Sciences et Développement économique Canada applicables aux appareils radio exempts de licence. L’exploitation est autorisée aux deux conditions suivantes :

1. L’appareil ne doit pas produire de brouillage;
2. L’appareil doit accepter tout brouillage radioélectrique subi, même si le brouillage est susceptible d’en compromettre le fonctionnement

This Equipment complies with ISED RSS-102 radiation exposure limits set forth for an uncontrolled environment. This equipment should be installed and operated with a minimum distance of 20cm between the radiator and any part of your body.

Pour se conformer aux exigences de conformité CNR 102 RF exposition, une distance de séparation d’au moins 20 cm doit être maintenue entre l’antenne de cet appareil ettoutes les personnes.

LIMITED ONE YEAR WARRANTY

Legrand will remedy any defect in workmanship or material in Legrand products which may develop under proper and normal use within one year from date of purchase by a consumer:

(1) by repair or replacement, or, at Legrand’s option, (2) by return of an amount equal to consumer’s purchase price. Such remedy is IN LIEU OF ANY AND ALL EXPRESSED OR IMPLIED WARRANTIES OF MERCHANTABILITY OR FITNESS FOR A PARTICULAR PURPOSE. Such remedy by Legrand does not include or cover cost of labor for removal or reinstallation of the product. ALL OTHER FURTHER ELEMENTS OF DAMAGE (INCIDENTAL OR CONSEQUENTIAL DAMAGES) FOR BREACH OF ANY AND ALL EXPRESSED OR IMPLIED WARRANTIES INCLUDING WARRANTIES OF MERCHANTABILITY OR FITNESS FOR A PARTICULAR PURPOSE ARE EXCLUDED HEREBY. (Some states do not allow disclaimers or exclusion or limitation of incidental or consequential damages, so the above disclaimer and limitation or exclusion may not apply to you.) ANY IMPLIED WARRANTIES INCLUDING WHERE REQUIRED WARRANTIES OF MERCHANTABILITY OR FITNESS FOR A PARTICULAR PURPOSE SHALL BE LIMITED TO THE ONE YEAR PERIOD SET FORTH ABOVE. (Some states do not allow limitations on how long an implied warranty lasts, so the above limitation may not apply to you.)

To ensure safety, all repairs to Legrand products must be made by Legrand, or under its specific direction. Procedure to obtain performance of any warranty obligation is as follows: (1) Contact Legrand, Syracuse, New York 13221, for instructions concerning return or repair; (2) return the product to Legrand, postage paid, with your name and address and a written description of the installation or use of the Legrand product, and the observed defects or failure to operate, or other claimed basis for dissatisfaction. This warranty gives you specific legal rights and you may also have other rights which vary from state to state.

800-223-4185
1.877.BY.LEGRAND
www.legrand.us
www.legrand.ca

341277 – 10/20

© Copyright 2020 Legrand All Rights Reserved.