VOKKERO ELITE FCC | WIRELESS INTERFACE

User Guide
Version 1.0

XX

VOKKERO

VOGO NA (North America)
25 Main Street, 3rd Floor
Tuckahoe, NY 10707

www.vokkerousa.com

VOGO
101, place Pierre Duhem,
Immeuble Les Centuries II,
34000 Montpellier, France
www.vokkero.com

PRÉAMBULE / PREAMBLE

- Ce guide décrit les fonctionnalités des produits VOKKERO ELITE FCC, Wireless Interface (WI) ELITE FCC, ses options et ses accessoires.
- This guide describes the functionality of the VOKKERO ELITE FCC, Wireless Interface (WI) ELITE FCC products, options and accessories.
- Aucun extrait de ce document ne pourra être reproduit ou transmis (sous format électronique ou papier, ou par photocopie) sans l'accord de VOGO. Ce document pourra être modifié sans préavis. Toutes les marques citées dans ce guide font l'objet d'un droit de propriété intellectuelle.
- No part of this document may be reproduced or transmitted (in electronic or paper, or photocopying) without the agreement of VOGO. This document may be changed without notice. All trademarks mentioned in this guide are the subject of intellectual property rights.

VOGO NA (North America)
25 Main Street, 3rd Floor
Tuckahoe, NY 10707

www.vokkerousa.com

VOGO (Headquarters)
101, place Pierre Duhem,
Immeuble Les Centuries II,
34000 Montpellier, France

www.vokkero.com

Table des matières

PRÉAMBULE / PREAMBLE 2
INFORMATIONS 4
DISCLAIMER 4
TECHNICAL SUPPORT 4
COMPLIANCE TO FCC US/CAN 5
ENVIRONMENTAL RECOMMENDATIONS 7
WARNINGS 7
USAGE OBLIGATIONS 8
DISPOSAL OF WASTE BY USERS IN PRIVATE HOUSEHOLDS 8
INTRODUCTION 9
AVAILABLE CHANNELS AND USE RESTRICTIONS 9
1. SYSTEM DESCRIPTION 10
1.1. VOKKERO® ELITE WI interface 10
1.1.1. Device interface description 10
1.1.2. General features 10
2. STARTING THE INTERFACE 11
2.1. Description of screen icons (default) 11
2.2. Description of screen icons (default) 11
2.3. How the interface works 11
2.3.1. CHANNEL/GROUP selection 11
2.3.2. “CALL” BUTTON 11
2.3.3. SETTINGS BUTTON 12
3. RADIO CONFIGURATION 13
3.1. Connection 13
3.2. Configuration with the VOKKERO® ELITE conference system 13
3.3. Antenna requirements 13
4. AUDIO CONFIGURATION WITH 4-WIRE INTERCOM SYSTEMS 14
4.1. Clearcom 4-wire interface 14
4.2. GreenGo 4-wire interface 15

INFORMATIONS

Document Information	
Title	VOKKERO ELITE FCC
Subtitle	Wireless Interface (WI) ELITE FCC
Document type	User Guide
Version	Version 1.0

This document applies to the following products:

Nom	Référence
Wireless Interface (WI) ELITE FCC	Up to: VO8161CA

DISCLAIMER

This document and the use of any information contained therein, is subject to the acceptance of the VOKKERO terms and conditions. They can be downloaded from www.vokkerousa.com
VOKKERO makes no warranties based on the accuracy or completeness of the contents of this document and reserves the right to make changes to specifications and product descriptions at any time without notice.

VOKKERO reserves all rights to this document and the information contained herein. Reproduction, use or disclosure to third parties without express permission is strictly prohibited. Copyright © 2016, VOKKERO.
VOKKERO is a registered trademark in the EU and other countries.
All rights to this manual are the exclusive property of VOKKERO. All rights reserved. Copying this manual (without written permission from the owner) via printing, copying, recording or by any other means, translating this manual (in full or partially) into any other language, including all programming languages, using any electrical, mechanical, magnetic or optical devices, manually or any by other methods, is prohibited.

VOKKERO reserves the right to change the technical specifications or functions of its products, or to cease manufacturing any of its products, or to cease technical support for one of its products without notice in writing and urges its customers to make sure that the information they have is valid.

VOKKERO configuration software and programs are available free of charge in a non-modifiable version. VOKKERO can make no guarantees, including guarantees concerning suitability and applicability for a certain type of application. Under no circumstances can the manufacturer, or the distributor of an VOKKERO program, be held liable for any damage caused by the use of the aforesaid program. Program names, as well as all copyright relating to programs, are the exclusive property of VOKKERO. Any transfer, granting of licences to a third party, leasing, hire, transport, copying, editing, translation, modification into another programming language or reverse engineering are prohibited without VOKKERO's prior written authorisation and consent.

TECHNICAL SUPPORT

Website

Our website contains a lot of useful information: information on modules and wireless modems, user guides, and configuration software and technical documents which can be accessed 24 hours a day.
If you have technical problems or cannot find the required information in the provided documents, contact our Technical Support on our website: www.vokkerousa.com. This ensures that your request will be processed as soon as possible.

Helpful Information when Contacting Technical Support

When contacting Technical Support, please have the following information ready:

- Product type (for example Guardian)
- Firmware version (for example V1.0)
- A clear description of your question or the problem
- A short description of the application

COMPLIANCE TO FCC US/CAN

• This device complies with part 15 of the FCC rules.
Operation is subject to the following two conditions:
(1) this device may not cause Harmful interference, and
(2) this device must accept any interference received, including interference that may cause undesired operation of the device.

This equipment has been tested and found to comply with the limits for a Class B digital device, pursuant to part 15 of the FCC Rules. These limits are designed to provide reasonable protection against harmful interference in a residential installation. This equipment generates, uses and can radiate radio frequency energy and, if not installed and used in accordance with the instruction, may cause harmful interference to radiocommunication. However, there is no guarantee that interference will not occur in a particular installation. If this equipment does cause harmful interference to radio or television reception, which can be determined by turning the equipment off
and on, the user is encouraged to try to correct the interference by one or more of the following measures :
- Reorient or relocate the receiving antenna.
- Increase the separation between the equipment and receiver.
- Connect the equipment into an outlet on a circuit different from that to which the receiver is connected.
- Consult the dealer or an experienced radio/TV technician for help.
Changes or modifications not expressly approved by VOGO could void the user's authority to operate the equipment.

This device complies with license-exempt transmitter(s)/receiver(s) that comply with Innovation, Science and Economic Development Canada's licence-exempt RSS standard(s).
Operation is subject to the following two conditions:
(1) this device may not cause harmful interference, and
(2) this device must accept any interference received, including interference that may cause undesired operation.

Under Industry Canada regulations, this radio transmitter may only operate using an antenna of a type and maximum (or lower) gain approved for the transmitter by Industry Canada. To reduce potential radio interference to other users, the antenna type and its gain should be chosen so that the equivalent isotropically radiated power (e.i.r.p.) is not superior than necessary for successful communication.

Ce dispositif est conforme aux règles de la FCC part 15.
Son fonctionnement est sujet aux deux conditions suivantes :
(1) le dispositif ne doit pas produire de brouillage préjudiciable, et
(2) ce dispositif doit accepter tout brouillage reçu, y compris un brouillage susceptible de provoquer un fonctionnement indésirable.

Cet équipement a été testé et déclaré conforme aux limites d'un appareil numérique de classe B, conformément à la partie 15 des règles de la FCC. Ces limites sont conçues pour fournir une protection raisonnable contre les interférences nuisibles dans une installation résidentielle. Cet équipement génère, utilise et peut émettre de l'énergie radiofréquence et, s'il n'est pas installé et utilisé conformément aux instructions, peut causer des interférences nuisibles aux radiocommunications. Il est cependant toujours possible que des interférences se produisent dans le cadre d'une installation particulière.
Si cet appareil produit des interférences nuisibles à la réception des programmes de radio et de télévision –détectables lors de la mise hors tension ou en tension de l'appareil-l'utilisateur est encouragé à mettre en œuvre une ou plusieurs des mesures suivantes pour remédier à ces interférences :
- Réorienter ou déplacer l'antenne de réception.
- Augmenter la distance entre l'équipement et le récepteur.
- Branchez le matériel à une sortie sur un circuit différent de celui auquel le récepteur est branché.
- Prendre conseil auprès du commerçant ou d'un technicien de radio/TV expérimenté.

Tout changement ou modification non expressément approuvé par la partie responsable des mesures de conformité peut amener l'utilisateur à se voir interdire l'usage de l'appareil.
Cet appareil est limité à l'exploitation des fréquences autorisées Partie 15, et ne peut pas être configuré par des utilisateurs finaux ou des installateurs professionnels à fonctionner en dehors des bandes autorisées.

L'émetteur/récepteur exempt de licence contenu dans le présent appareil est conforme aux CNR d'Innovation, Sciences et Développement économique Canada applicables aux appareils radio exempts de licence.
L'exploitation est autorisée aux deux conditions suivantes:
(1) l'appareil ne doit pas produire de brouillage, et
(2) l'appareil doit accepter tout brouillage radioélectrique subi, même si le brouillage est susceptible d'en compromettre le fonctionnement.

Conformément à la réglementation d'Industrie Canada, le présent émetteur radio peut fonctionner avec une antenne d'un type et d'un gain maximal (ou inférieur) approuvé pour l'émetteur par Industrie Canada. Dans le but de réduire les risques de brouillage radioélectrique à l'intention des autres utilisateurs, il faut choisir le type d'antenne et son gain de sorte que la puissance isotrope rayonnée équivalente (p.i.r.e.) ne dépasse pas l'intensité nécessaire à l'établissement d'une communication satisfaisante.

FOR MOBILE DEVICE USAGE

This device complies with FCC and ISED RF radiation exposure limits set forth for general population.This device must be installed to provide a separation distance of at least 20cm from all persons and must not be co-located or operating in conjunction with any other antenna or transmitter.

Cet appareil est conforme à l'exposition aux radiations RF de la FCC et de l'SIED. Cet appareil doit être installé à une distance d'au moins 20 cm des personnes et ne doit pas être situé ou fonctionner conjointement avec une autre antenne ou un autre émetteur.

Identification :
- FCC ID : 2AU6N-VO8161C
- CANADAIC : 25704-VO8161C

Product reference: USA/CANADA: VO8161C

Authorised representative in Canada
ZEAT SPORTS
310-5253 Blvd Décarie - H3W 3C3 MONTREAL - CANADA
Phone : +1-877-750.2012

ENVIRONMENTAL RECOMMENDATIONS

All superfluous packaging materials have been eliminated. We have done everything possible to make it easy to separate the packaging into three types of materials: cardboard (box), expanded polystyrene (filler material) and polyethylene (packets, foam protective sheets). Your device is composed of materials that can be recycled and reused if it is dismantled by a specialist company. Please observe local regulations concerning the manner in which waste packaging material, used batteries and your obsolete equipment are disposed of.

WARNINGS

Valid for : VO8161CA

Read the instructions in the manual.

The safety of this product is only guaranteed when it is used in accordance with its purpose.
Maintenance should only be carried out by qualified persons.

Please note: Do not install the equipment close to a heat source or in damp conditions.

Please note: When the equipment is open, do not carry out any operations other than the ones set out in this document.

Please note: Do not open the product as there is a risk of electrical shock.

Please note: For your own safety, you must ensure that the equipment is switched off before carrying out any work on it.

Please note: For your own safety, the power supply circuit must be SELV (Safety Extra Low Voltage) and must be from limited power sources.

The product must be equipped with a switching mechanism so that the power can be cut. This must be close to the equipment. Any electrical connection of the product must be equipped with a protection device against voltage spikes and short-circuits.

USAGE OBLIGATIONS

- Before using the system, check that the power supply voltage shown in the user manual corresponds to your supply. If it doesn't, please consult your supplier.
- Place the device against a flat, firm and stable surface.
- The device must be installed in a location that is sufficiently ventilated so that there is no risk of internal heating and it must not be covered with objects such as newspapers, cloths, curtains, etc.
- The device must never be exposed to heat sources such as heating equipment.
- Do not place the device close to objects with naked flames such as lit candles, blowtorches, etc.
- The device must not be exposed to harsh chemical agents or solvents likely to damage the plastic or corrode the metal parts.
- This device must be installed to provide a separation distance of at least 20cm from all persons and must not be co-located or operating in conjunction with any other antenna or transmitter.

DISPOSAL OF WASTE BY USERS IN PRIVATE HOUSEHOLDS

This symbol on the product or on its packaging indicates that this product must not be disposed of with your other household waste. Instead, it is your responsibility to dispose of your waste by taking it to a collection point designated for the recycling of electrical and electronic appliances. Separate collection and recycling of your waste at the time of disposal will contribute to conserving natural resources and guarantee recycling that respects the environment and human health. For further information concerning your nearest recycling centre, please contact your nearest local authority/town hall offices, your household waste collection company or the shop where you bought the product

Warning: If the charger is used with any other batteries or products whatsoever, there is a risk of an explosion. After use, the batteries must be disposed of at an appropriate recycling centre. They must not be thrown away to degrade in the environment. When batteries are replaced, the device must be corectly implemented.

This symbol on the devode or its packaging means the use of a DC voltage.

INTRODUCTION

The instructions given below will make it simple and easy for you to start using your VOKKERO® ELITE Wireless Interface (WI) communication system.

All of the operations described are shared by the versions of the VOKKERO® ELITE WI product listed below:

VO8161CA

Note: the reference number for your device can be found on the label located on the base of the device.

The system is made up of the following elements:

Wireless Interface box (WI)
A power supply
A radio antenna
An antenna offset kit (optional)

The WI interface makes it possible to operate a VOKKERO® ELITE wireless conference system with a wired communication system. In order to be able to configure the interface, you will need to link the equipment to a VOKKERO® ELITE configurator/charger. When using it for the first time, you will need to configure it in order to ensure that the system is compatible with the VOKKERO® ELITE conference system.

All of the WI system's operational parameters are controlled by the configurator. This lets you access the settings menu via a touchscreen.

AVAILABLE CHANNELS AND USE RESTRICTIONS

To know the frequency channels available in the VOKKER-ELITE-FCC001-WI ELITE FCC - Wireless interface (WI) product, any restrictions on the use of certain channels, as well as the general operation of the ELITE system (terminals and configurator) please refer to the following documentation :

- For the wireless interface (WI) reference **VO8161CA**, the relevant User Guide to refer is DRAFT_VOK_ELITE_FCC_UG_V1.0

1. SYSTEM DESCRIPTION

1.1. VOKKERO® ELITE WI interface

1.1.1. Device interface description

1.1.2. General features

Parameters	Value
Supply voltage	24V nominal
Maximum consumption	300mA
Supply	Mains supply
Operational temperature range	-0°C / +45°C
Dimensions	230 x 110 x 50mm
Weight	650g

2. STARTING THE INTERFACE

Before connecting the power supply, please ensure that the switch on the device is set to OFF

- To switch the device on, set the "On/Off" switch to ON.
- To switch the device off, set the "On/Off" switch to OFF.

2.1. Description of screen icons (default)

Once you have switched on the device, the LCD screen will light up and the VOKKERO® logo will be displayed.

The "Welcome" screen will then be displayed, followed by the device name. By default, the product's name will be "ELITE". This name can be modified on the configurator.

NOTE 1: all settings, including the volume settings, will be retained when the device is switched off and will remain the same once the device is switched back on.

2.2. Description of screen icons (default)

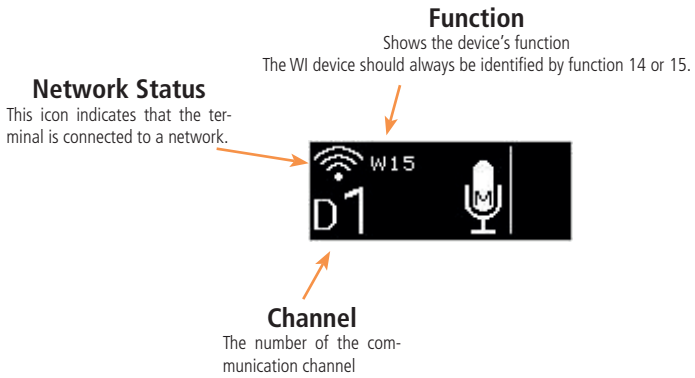

2.3. How the interface works

2.3.1. CHANNEL/GROUP selection

When the device is switched on, you can change the communication channel (or group) with the 2 "high and low ar-rows" located on the front of the device. Pressing on the "up arrow" button will move it up a position, while pressing on the "down arrow" button will move it down a position.

2.3.2. "CALL" BUTTON

The "CALL" button is inactive with ELITE system.

2.3.3. SETTINGS BUTTON

The settings button is a continuous rotation button with a validation function. A long press on the button will let you switch to audio configuration mode for input/output.
Rotating the button will allow you to navigate between the different available options. Pressing the button will allow you to validate.

The following settings are available:

- Out audio gain: access the audio out gain settings menu
- In audio gain: access the audio in gain settings menu
- PIO: Set the way the WI acts on its audio output in case a PIO button is pressed on one or several ELITE terminals

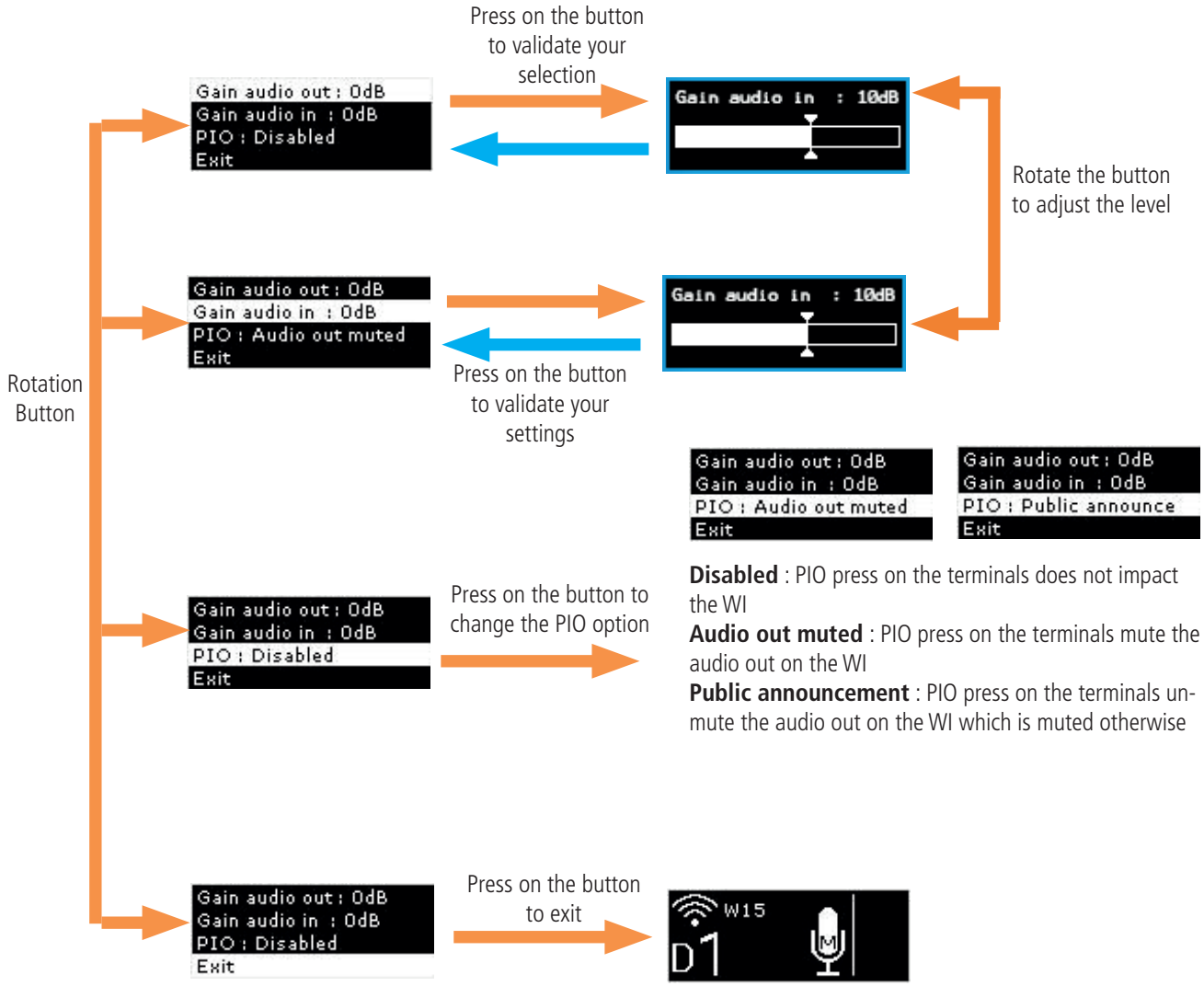

3. RADIO CONFIGURATION

3.1. Connection

The interface can be connected to the configurator using the USB socket on the top of the device. It must be linked to the USB socket of the VOKKERO® ELITE configurator/charger. The USB cable comes supplied with your ap-pliance.
The WI icon will be displayed on the configurator's home screen.

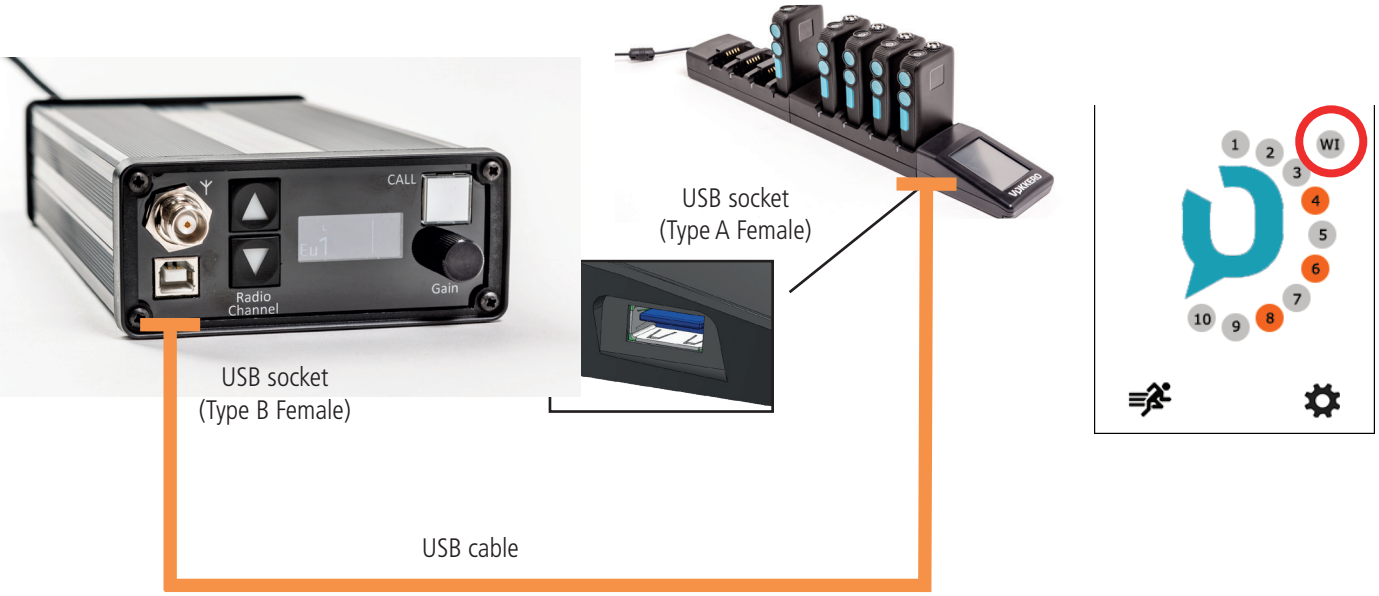

3.2. Configuration with the VOKKERO® ELITE conference system

The WI interface must be configured at the same time as the other conference system equipment. If the WI interface is connected during the quick config operation, it will then be configurated automatically and will be ready for use.

To find out how to launch the quick config operation on the configurator/charger, please consult the VOKKERO® ELITE conference system user manual: XX (VOK_ELITE_FCC_UG)

At the end of the configuration of the WI interface with the ELITE conference system, it is mandatory to unplug the USB cable both sides (WI interface and ELITE configurator) to enable WI audio functioning !

3.3. Antenna and usage requirements

This device is dedicated to professional users only and must be used only with the antenna supplied by VOGO. The reference of the antenna is TLB-902 928-900LD-TNC

4. AUDIO CONFIGURATION with 4-wire Intercom systems

4.1. Clearcom 4-wire interface

The WI interface is designed to be connected to a 4-wire intercom. Below you will find 2 configuration examples:

- Connect a cable between the green connector of the clearcom interface and two XLR 3 pts male and female.

In order to identify the cabling, refer to the Clearcom IF4W4 user guide.

- Connect an XLR 3 pts cable (male/female) between the "OUT1" connector of the 4-wire interface system and the "IN" connector of the Vokkero ELITE wireless interface.
- Connect an XLR 3 pts cable (male/female) between the "IN1" connector of the 4-wire interface system and the "OUT" connector of the Vokkero ELITE wireless interface.
- Connect the Vokkero ELITE wireless Interface power cable to another power supply.

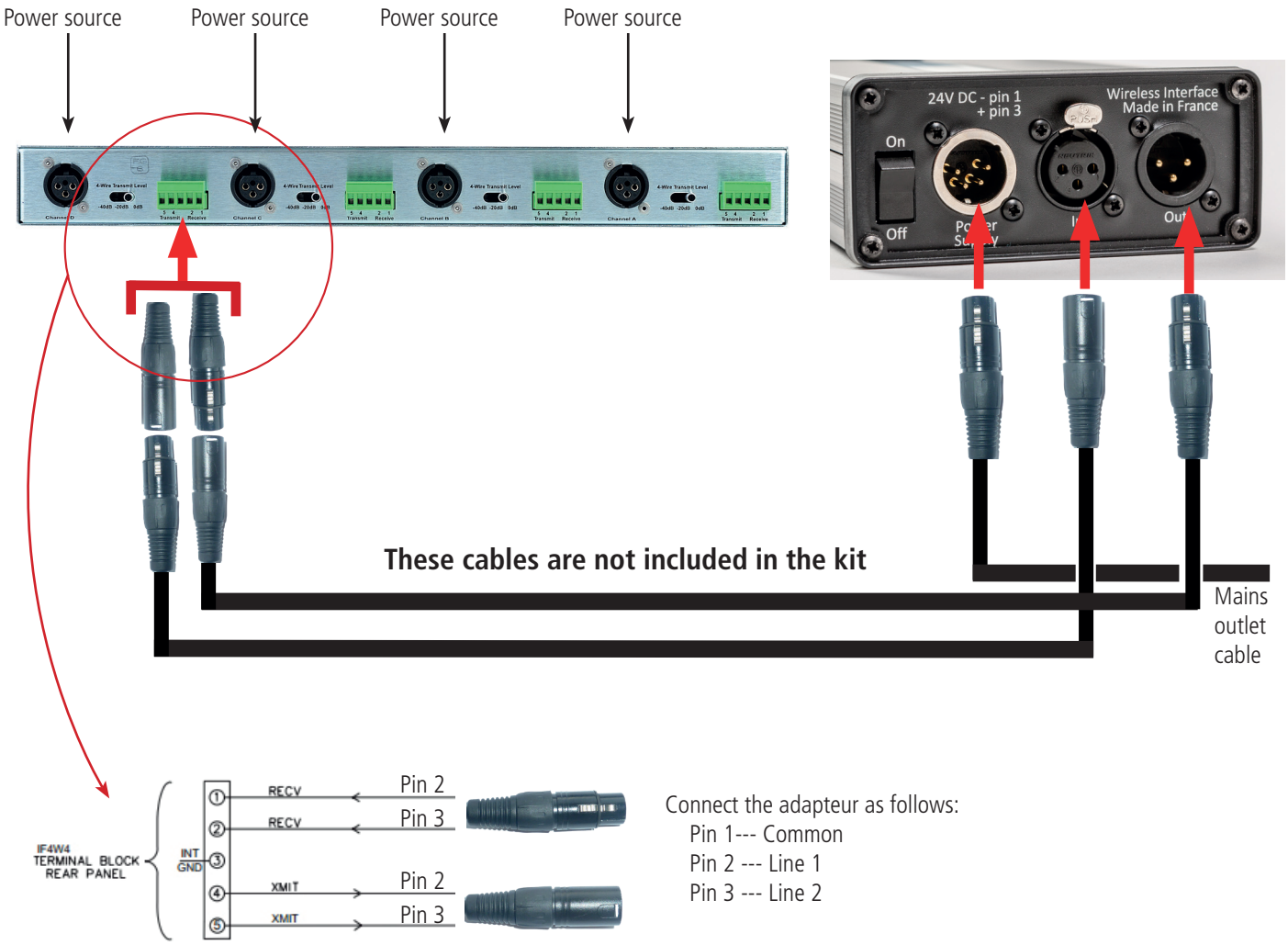

Connect the adapteur as follows:
Pin 1--- Common
Pin 2 --- Line 1
Pin 3 --- Line 2

4.2. GreenGo 4-wire interface

- Connect an XLR 3 pts cable (male/female) between the "OUT1" connector of the 4-wire interface system and the "IN" connector of the Vokkero ELITE wireless interface.
- Connect an XLR 3 pts cable (male/female) between the "IN1" connector of the 4-wire interface system and the "OUT" connector of the Vokkero ELITE wireless interface.
- Connect the Vokkero ELITE wireless Interface power cable to another power supply.

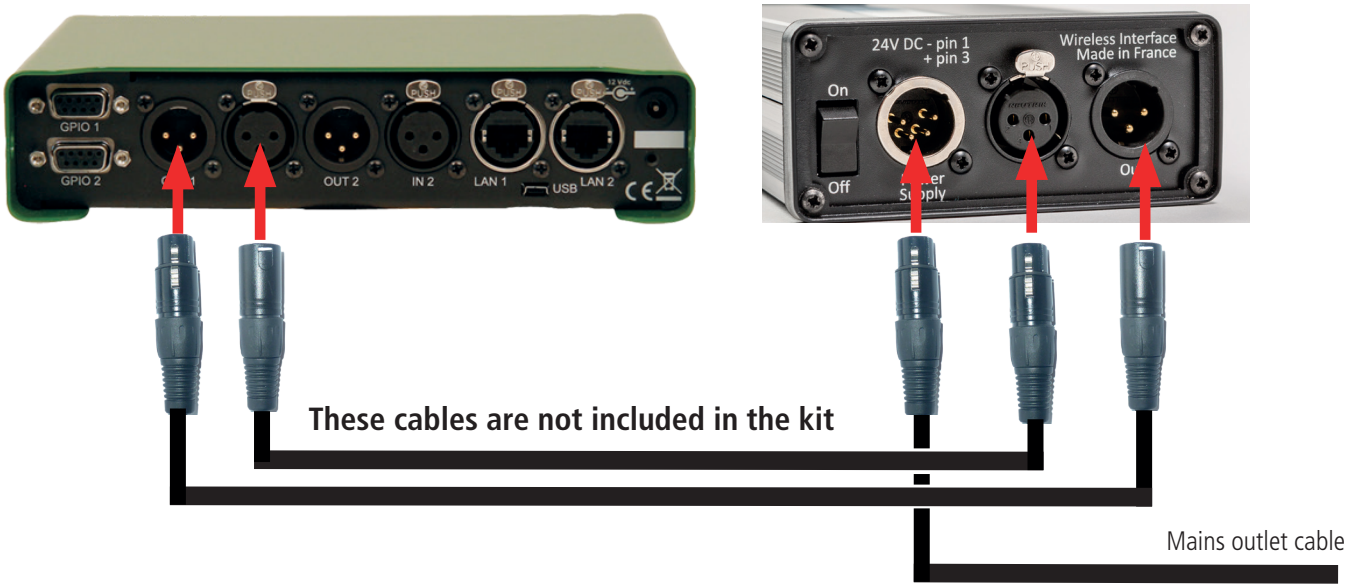

Adopted settings for the WI interface:
Out Audio Gain: 0dB
In Audio Gain: 12dB

Adopted settings for the GreenGo interface:
4-wire interface gain: 6db
Threshold: -45dB