VO8438 -Antenna report for VO8438

Summary

VO8438 -Antenna report for VO8438 1
1. Antenna references 2
2. Electrical Characteristics 2
3. Matching circuit 3
4. SWR & Smith chart 4
5. Gain 5
6. Radiation Diagram 6

1. Antenna references

Antenna model : 209940A – ACC1300BI

Antenna designation : ANT FIL81mm YELLO SILI-1V 0.15 0.15mm2 TIN-PLATE 3mm/ 1side

Antenna manufacturer : SOCIETE NOUVELLE ISEROISE

Antenna manufacturer address : 131 Rue du Vercors - ZA de Malvaisin - 38420 - LE VERSOUD -France

2. Electrical Characteristics

Item	Specification
Type	Lambda/4 wire antenna
Central frequency	880
Bandwidth	140MHz
Gain	0dBi
Polarization	Linear
VSWR	3 max
Azimuth Bandwith	Omni-directional
Impedance	custom
Rated Power (max.)	30dBm
Maximum Input Power	30dBm
Operation Temperature	-40° C ~ +85° C

3. Matching circuit

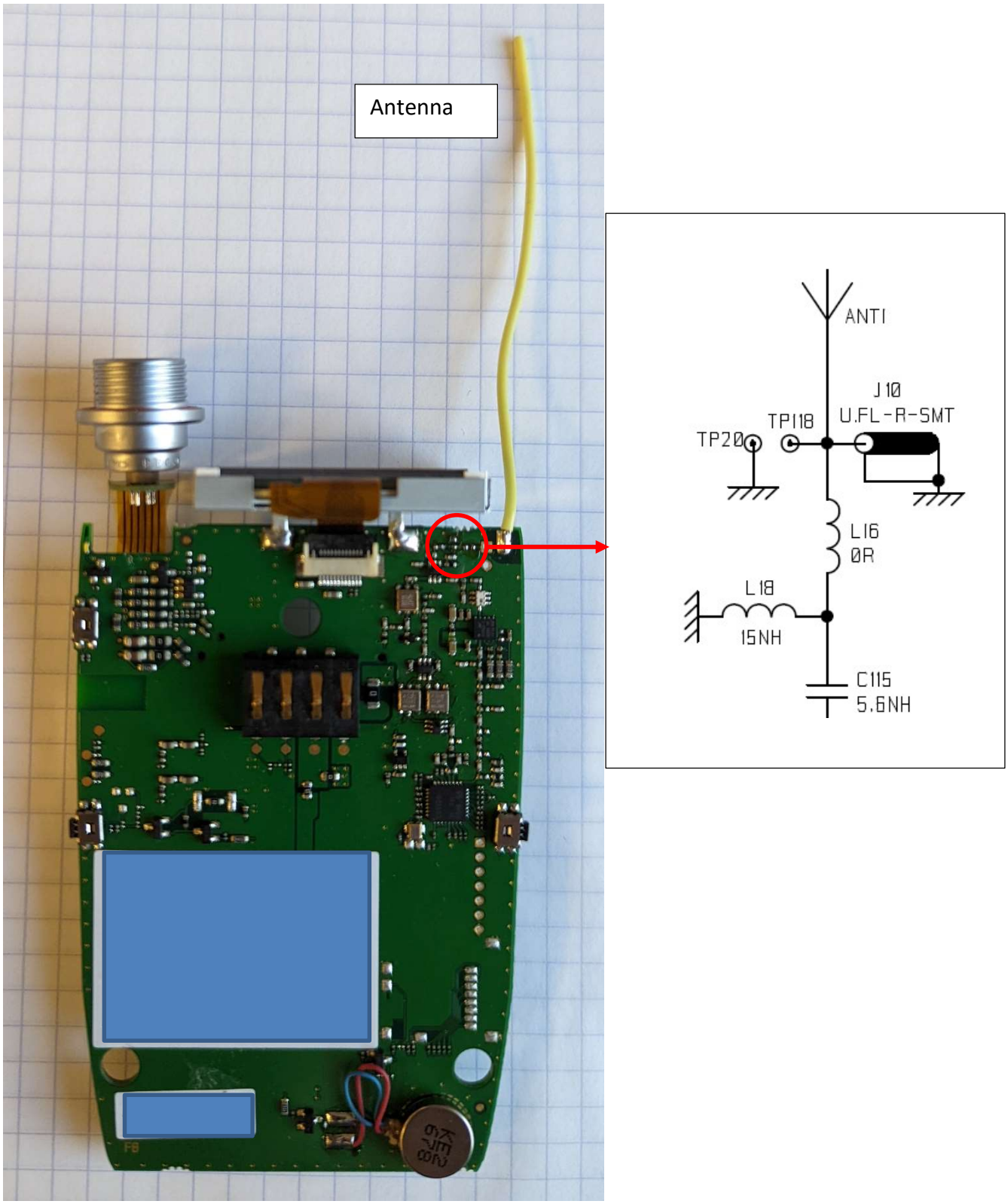

4. SWR & Smith chart

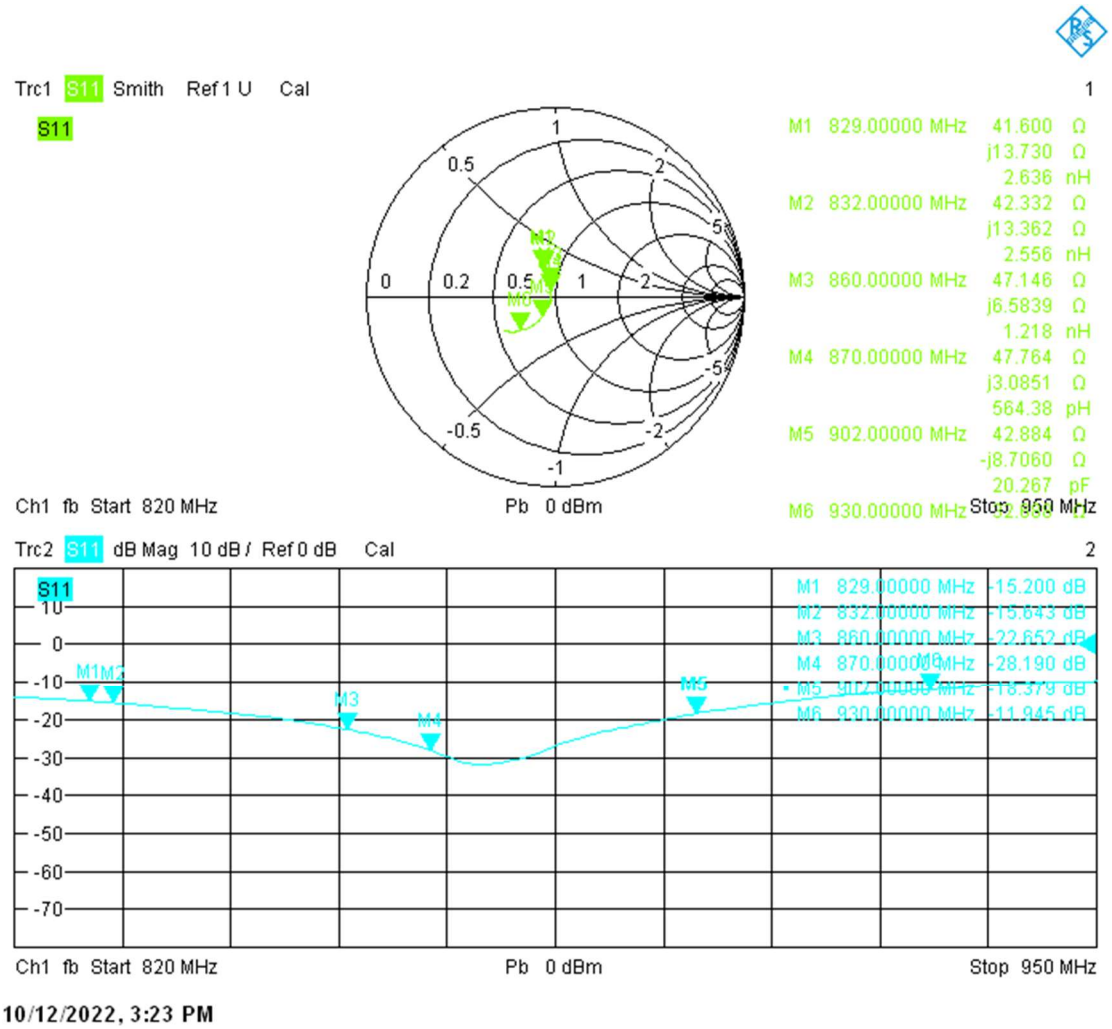

10/12/2022, 3:23 PM

5. Gain

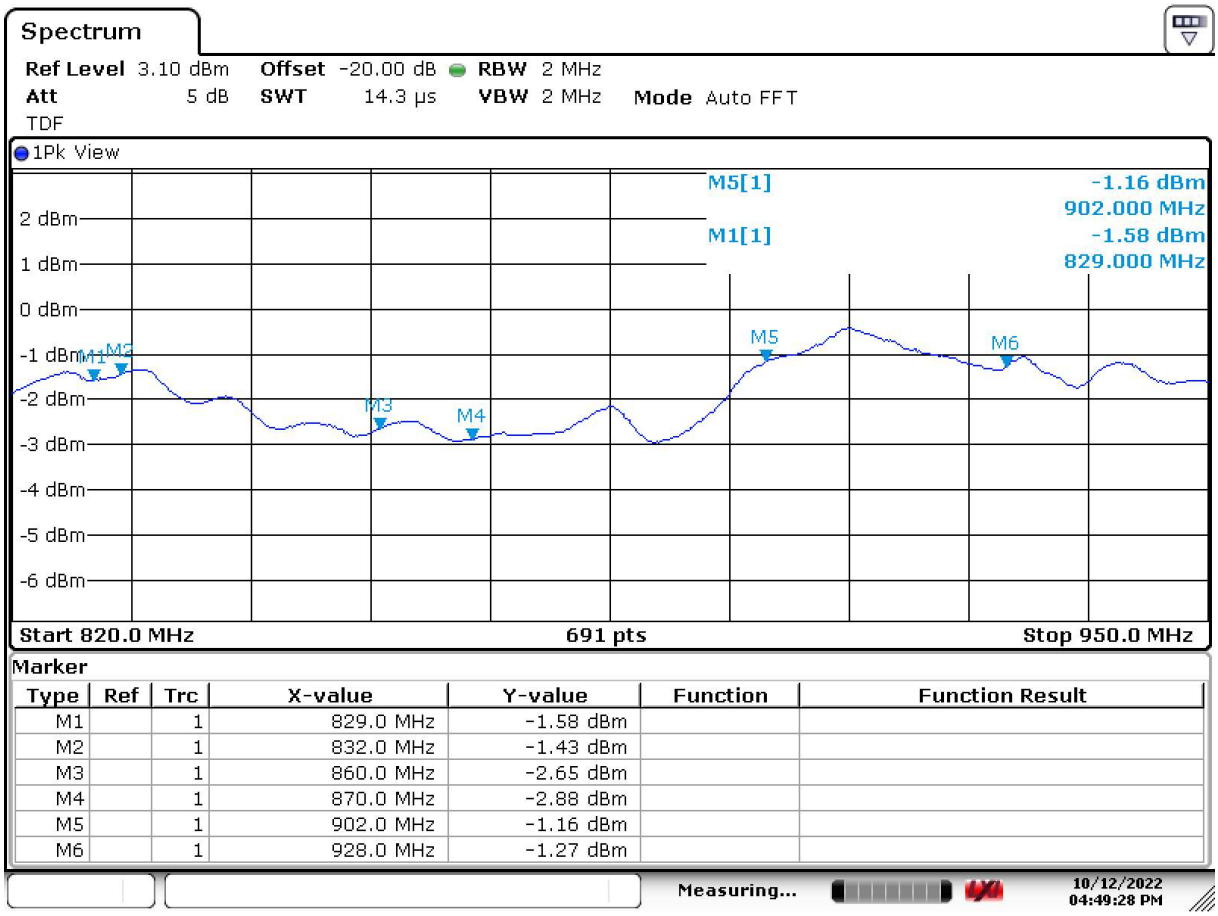

Marker

Type	Ref	Trc	X-value	Y-value	Function	Function Result
M1		1	829.0 MHz	-1.58 dBm		
M2		1	832.0 MHz	-1.43 dBm		
M3		1	860.0 MHz	-2.65 dBm		
M4		1	870.0 MHz	-2.88 dBm		
M5		1	902.0 MHz	-1.16 dBm		
M6		1	928.0 MHz	-1.27 dBm		

Date: 12.OCT.2022 16:49:29

6. Radiation Diagram

Done with an emitted radiated power (EIRP) of 20dBm

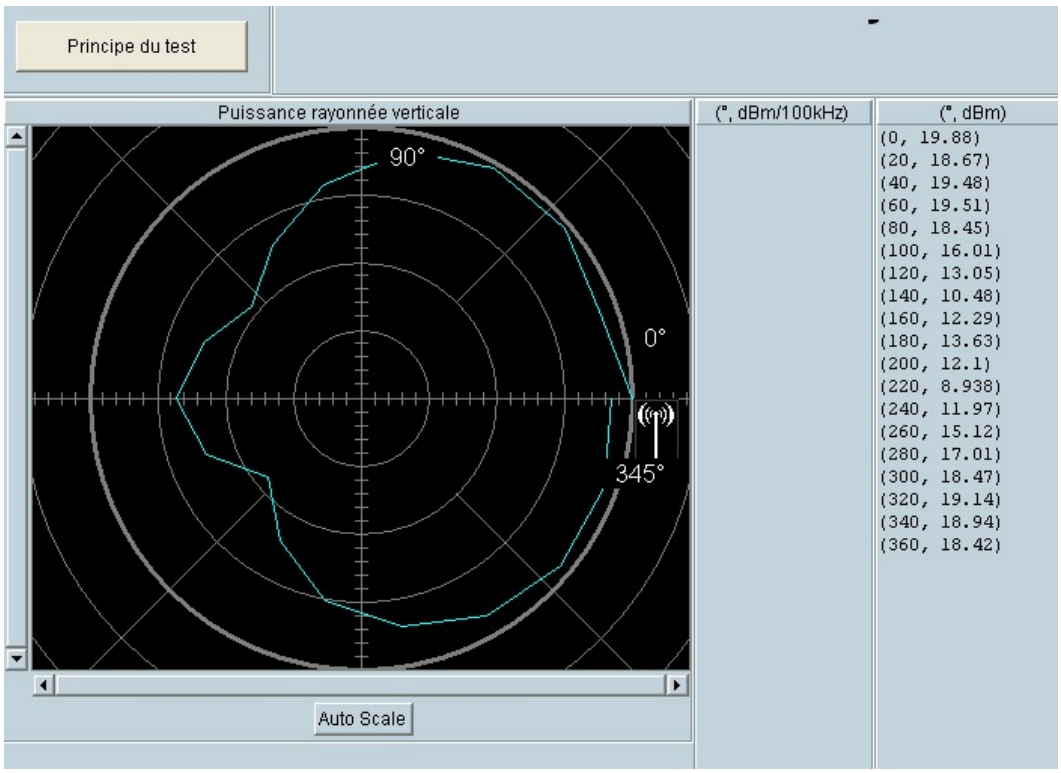

Figure 1 : EIRP for V Polarization – Product Vertical

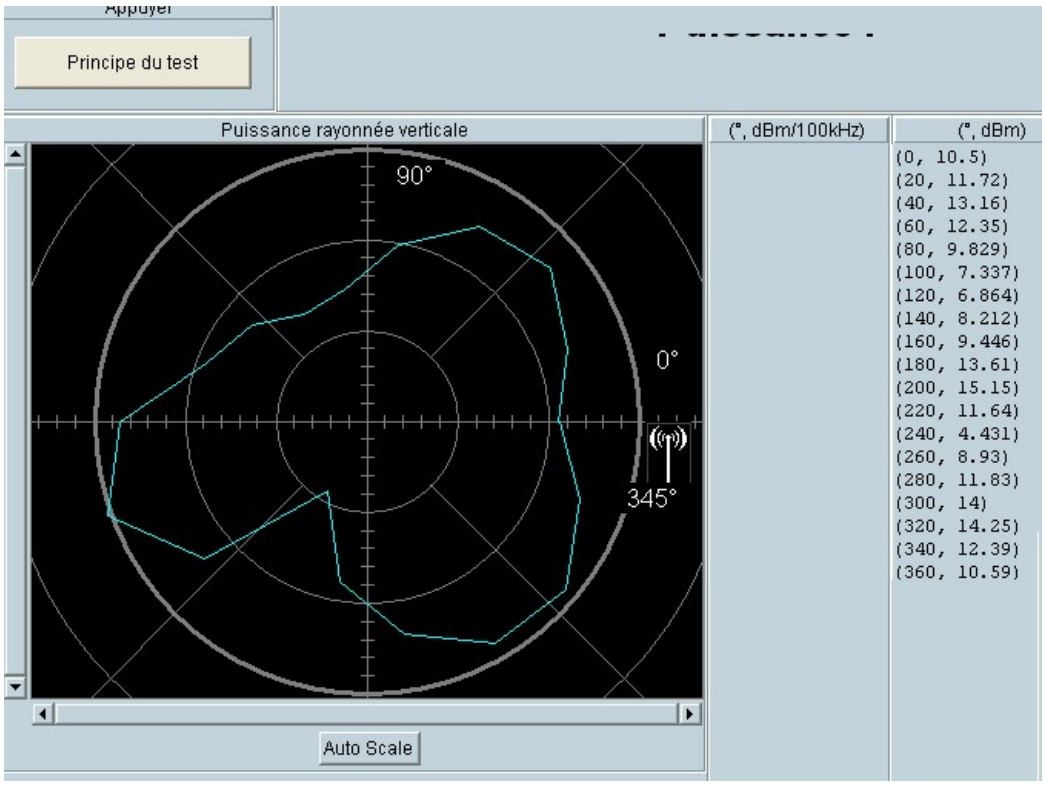

Figure 2 : EIRP for V Polarization – Product Horizontal

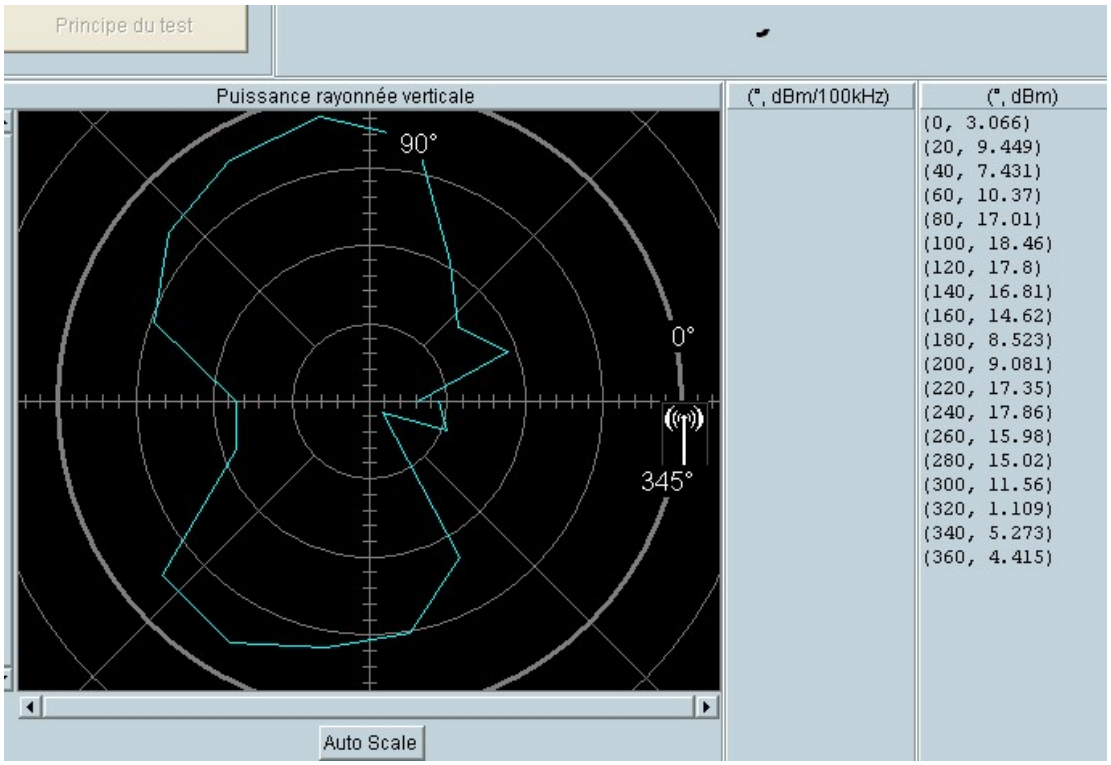

Figure 3 : EIRP for H Polarization – Product Horizontal

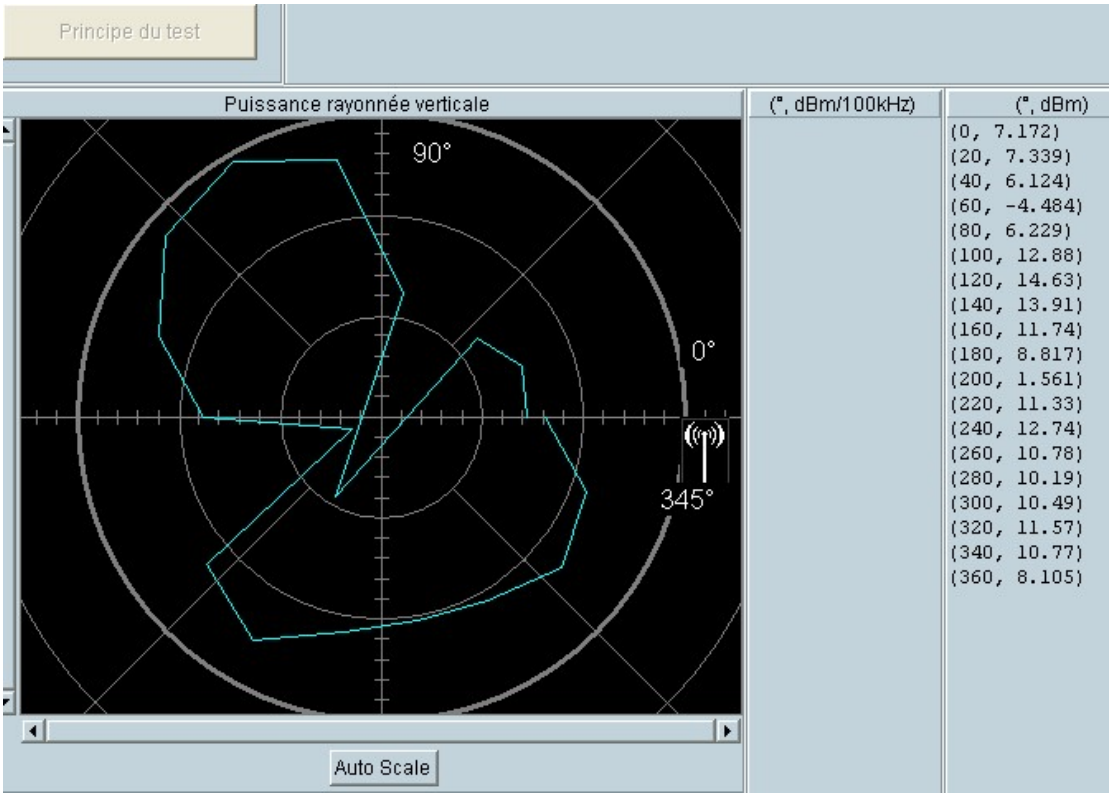

Figure 4: EIRP for H Polarization – Product Vertical

End of the Report