Smart Toothbrush

Product specification

model：U6

·The best electric toothbrush
·Offer 5 modes plus 3 intensity setting
·Smart pressure & Coverage Overview
·Hardware pressure sensor Alarm
·Wireless Rechargeable Battery
·Bulit in WIFI connect with APP
·Easy to use and useful records

Features

1. Brush head
2. Pressure alarm Light ring
3. Mode/Power on/off button: gently press to change the mode within 5 sec after gently pressing switch on button/after starting up. 5 sec after starting up/shifting: click shutdown button/double click and change the toothbrush mode.
4. intensity button: gently press after staring up and change the strength
5. Intensity light
6. Clean
7. White+
8. Sensitive
9. GumCare
10. Smart
11. WIFI connection Intensity light:
    *Corresponding situations when Intensity light flickers during networking process:
    1) Light is off
    → the network is cut
    2) The light flickers
    → connecting to the network
    3) The light is normally on
    → successfully connected
12. Battery indication:
    The red light is on when the electric quantity is ＜20%
    The red light gradually changes during charging process
    Green light is normally on when it finishes charging

Modes

- Offer 5 modes plus 3 intensity setting
- 34000-35000 times/per minute
- Clean : For exceptional everyday clean
- White+: To Tea/coffee - drinker remove surface stains
- Sensitive: For Sensitive people
- GumCare: Special attention to Gum
- Smart: A smart mode with more cleaning performances

Connectivity

- Smart brush handle sensors :Different cleaning movement in different areas within smart mode.
- WIFI wireless technology ： Connected brushing APP.

Use Wifi to connect for the first time

1. Open App
2. Open toothbrush switch
3. Press strength regulating key→ start to flicker toothbrush WIFI indicator and start to connect with network by toothbrush
4. When toothbrush WIFI indicator start to flicker, input router account and password on App interface
5. When toothbrush WiFi indicator is normally on, it means successful connection

*Indicator flickering situation in networking process:

1) Light off disconnecting
2) Lamp flickering networking
3) Lamp normally one successful connection

U6 linking with APP(the first connection on this machine):

1. Open APP
2. Open electric toothbrush, toothbrush lamp is off
3. After 3sec, toothbrush is aromatically networking, WIFI lamp is normally one. Toothbrush is connected successfully.

Replacement

Brush head

- Replace Sonicare brush heads every 3 months to achieve optimal results.

Smart sensor technology

- Unique Pressure Alarm : Alerts when brushing too hard
- Location Recognition : Reduce blind angle；improves coverage
- Mouth scrubbing map : Guides to scrubbing trouble area

Technical Specification

- Battery : Rechargeable
- charge hour：About 6 hour
- operating days：About 20 days
- Waterproof level：IPX7
- Brush material： DuPont , gradually reminding brush hair
- Date of manufacture： On the package

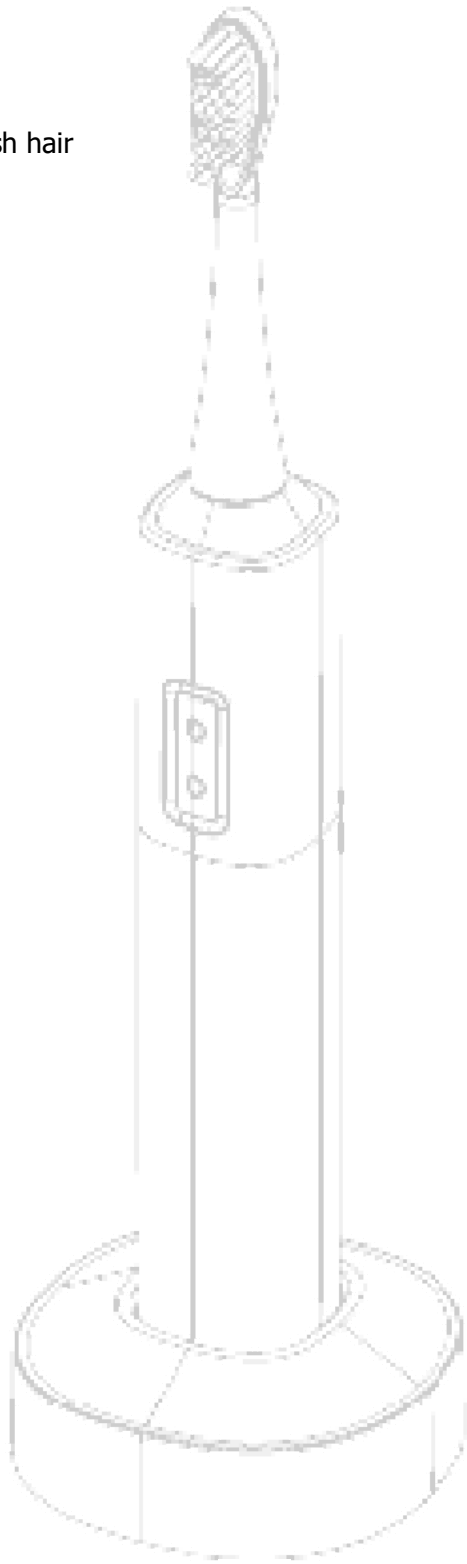

Power

- power：1.5W
- Voltage：5V/2A

Included

- Handles: 1 Handles
- Brush heads : 2 Brush heads
- Charger : 1
- Cable : 1 USB cable
- Specification : 1

package

- Color：On the package
- Size: 197*132*43mm
- Weight：375g

Service

- Warranty : one-year limited warranty

APP download method:

IOS version APP download

Android app download

Warning:

This device complies with Part 15 of the FCC Rules. Operation is subject to the following two conditions: (1) this device may not cause harmful interference, and (2) this device must accept any interference received, including interference that may cause undesired operation.

changes or modifications not expressly approved by the party responsible for compliance could void the user's authority to operate the equipment.
NOTE: This equipment has been tested and found to comply with the limits for a Class B digital device, pursuant to Part 15 of the FCC Rules. These limits are designed to provide reasonable protection against harmful interference in a residential installation. This equipment generates, uses and can radiate radio frequency energy and, if not installed and used in accordance with the instructions, may cause harmful interference to radio communications. However, there is no guarantee that interference will not occur in a particular installation.
If this equipment does cause harmful interference to radio or television reception, which can be determined by turning the equipment off and on, the user is encouraged to try to correct the interference by one or more of the following measures:
-- Reorient or relocate the receiving antenna.
-- Increase the separation between the equipment and receiver.
-- Connect the equipment into an outlet on a circuit different from that to which the receiver is connected.
-- Consult the dealer or an experienced radio/TV technician for help.
NOTE: This device and its antenna(s) must not be co-located or operation in conjunction with any other antenna or transmitter