T102 Wi-Fi Module

1. Product Brief

T102_V1.1 is a low power embeded Wi-Fi Module. It contains a Wi-Fi Soc(RTL8710BN) and integrate Network protocol stack. T102 Embeded ARM-CM4 MCU , 2Mbyte Flash , 256Kbyte SRAM。 T102 runs RTOS , integrate all Wi-Fi MAC and TCP/IP protocol stack.

1.1 Feature

- ✧ Embeded ARM_CM4 MCU
  - CPU: 125MHz
- ✧ Voltage：3.0V-3.6V
  - Peripheral：9×GPIOs, 1×UART, 5×PWM
- ✧ Wi-Fi
  - 802.11 b/g/n
  - Channel 1-14@2.4GHz
  - Support WPA/WPA2
  - 802.11b +16dBm max output power.
  - Support STA/AP/STA+AP
  - Support SmartConfig (include Android and IOS)
  - PCB Antenna
  - Operating temperature：-20℃ to 70℃

1.2 Material Object

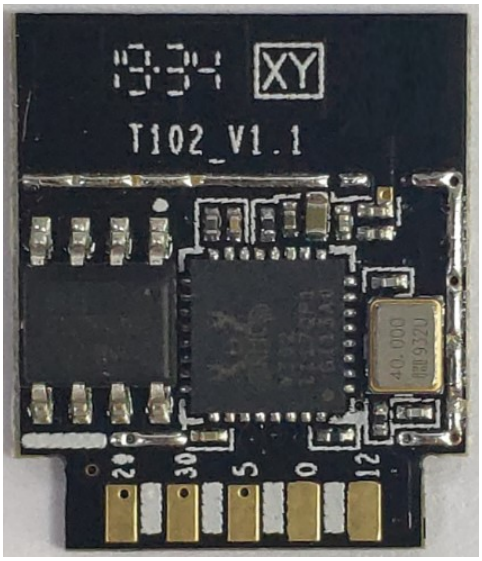

Picture 2 T102 **front view**

2. Module Interface

Pin

T102 has 2 11 pins，the width between two pins is 2mm:

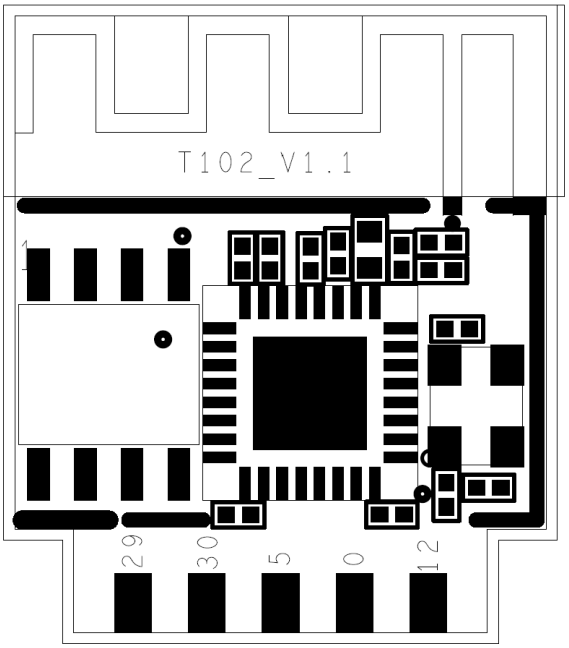

Picture 3 T102 **Front view Pin definition**：

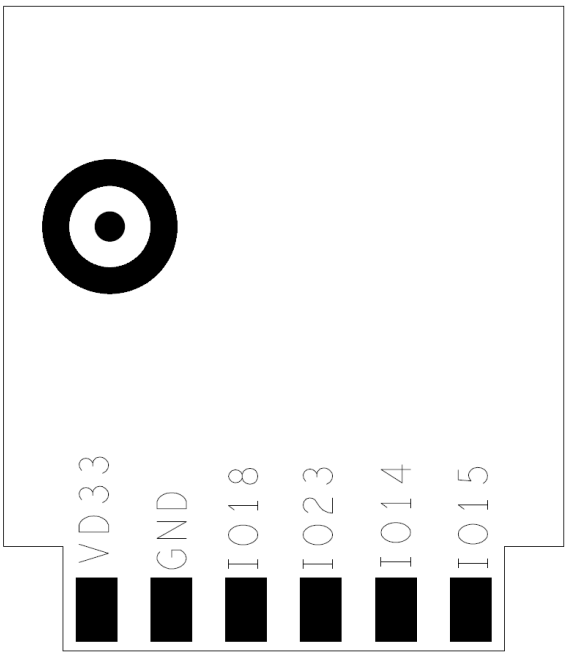

T102 **rear view**

Table 1 T102 **Pin**

Index	Symb	IO Type	Feature
1	VDD	P	Module Power(3.3V)
3	GND	P	Module GND
5	A18	I/O	GPIO_A18/UART0_RXD
7	A23	I/O	GPIO_A23/UART0_TXD
9	A14	I/O	GPIO_A14/PWM0
11	A15	I/O	GPIO_A15/PWM1
2	A12	I/O	GPIO_A12/PWM3
4	A0	I/O	GPIO_A0/PWM2
6	A5	I/O	GPIO_A5/PWM4
8	A30	I/O	GPIO_A30/DEBUG_LOG_TX
10	A29	I/O	GPIO_A29/DEBUG_LOG_RX

3. Electrical parameters

3.1 Absolute Electrical parameters

Parm	Description	Min	Max	Unit
Ts	storage temperature	-20	85	℃
VCC	Voltage	-0.3	3.6	V

3.2 Work condition

Para	Description	Min	Normal	Max	Unit
Ta	Operating Temperature	-20	-	70	℃
VCC	Operating Voltage	3.0	3.3	3.6	V
V_{OL}	IO Low level	-	-	VCC*0.1	V
V_{OH}	IO High Level	VCC*0.8	-	VCC	V
I_{max}	IO current	-	-	16	mA

3.3 Wi-Fi Tx Power

Symb	Para			Normal	Unit
	Model	Speed	Tx Power		
I_{RF}	11b	11Mbps	+16dBm	288	mA
I_{RF}	11g	54Mbps	+14dBm	258	mA
I_{RF}	11n	MCS7	+13dBm	251	mA

3.4 Wi-Fi Rx Power

Symb	Para		Normal	Unit
	Model	Speed		
I_{RF}	11b	11Mbps	119	mA
I_{RF}	11g	54Mbps	122	mA
I_{RF}	11n	MCS7	122	mA

3.5 Working Power Consumption

Work model	Work status, Ta=25℃	AV	MAX.	UNIT
Smart config	WI-FI led fast flash	123	413	mA
AP config	WI-FI Led slow flash	140	413	mA
Connected	Wi-Fi Led on	19.6	413	mA
Reconnected	Wi-Fi Led off	70	413	mA

4. RF Characteristic

4.1 Basic RF characteristic

Para	Description
Frequency	2.412~2.484GHz
Wi-Fi Standard	IEEE 802.11b/g/n(channel 1-14)
Speed	11b:1,2,5.5, 11 (Mbps) 11g:6,9,12,18,24,36,48,54(Mbps) 11n:BW20_MCS7 65Mbps 11n:BW40_MCS7 135Mbps
Antenna	PCB Antenna

4.2 Wi-Fi output power

para		Min	Normal	Max	Unit
Model	Speed				dBm
802.11b CCK Mode	11M	14	16	18	dBm
802.11g OFDM Mode	54M	12	14	16	dBm
802.11n OFDM Mode	BW20_MCS7	11	13	15	dBm
802.11n OFDM Mode	BW40_MCS7	11	13	15	dBm
Frequency Error		-10	-	10	ppm

4.3 Wi-Fi Rx Sensitivity

Para		Min	Normal	Max	Unit
Model	Speec				dBm
PER<8%，RX，802.11b CCK Mode	11M	-	-86	-80	dBm
PER<10% RX，802.11gOFDM Mode	54M	-	-73	-67	dBm
PER<10%RX，802.11nOFDM Mode	BW20_MCS0	-	-89	-83	dBm
PER<10%RX，802.11nOFDM Mode	BW20_MCS7	-	-71	-65	dBm

5. Antenna Info

5.1 Antenna Type

PCB Antenna

5.2 Reduce Antenna interfere

To ensure the Wi-Fi product has best RF performance, we suggest the min distance between the antenna and other metal is 15mm.

6. Package Info

6.1 Model Size

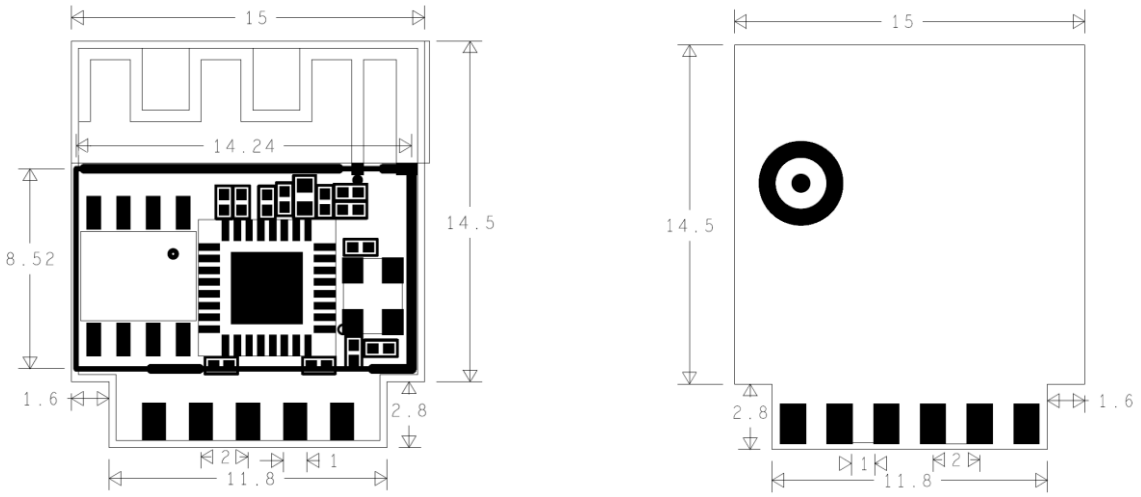

Pic 4 T102 **size**

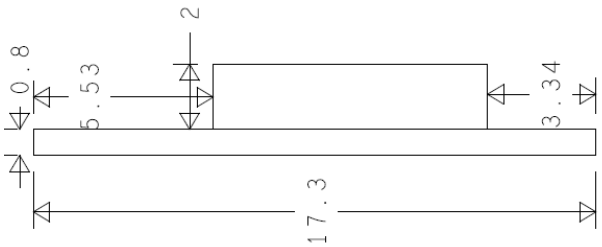

Pic 5 T102 **side view**

6.2 PCB Package

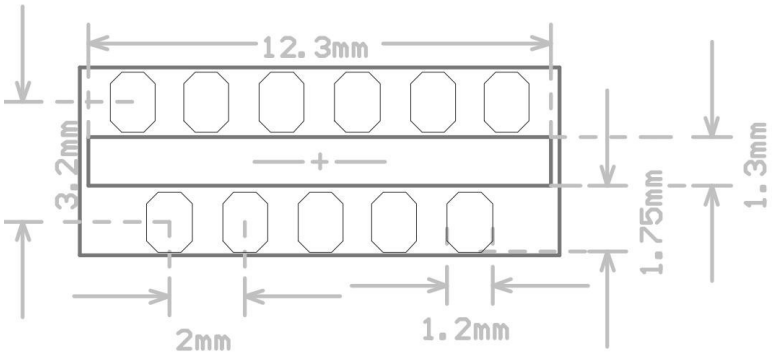

Pic 5 T102 **PCB Package**

FCC Regulatory notices

Modification statement

Shenzhen Phaten Technology Co., Ltd. has not approved any changes or modifications to this device by the user. Any changes or modifications could void the user's authority to operate the equipment. **Interference statement**

This device complies with Part 15 of the FCC Rules and Industry Canada licence-exempt RSS standard(s). Operation is subject to the following two conditions: (1) this device may not cause interference, and (2) this device must accept any interference, including interference that may cause undesired operation of the device.

RF exposure

This equipment complies with FCC and ISED radiation exposure limits set forth for an uncontrolled environment. The antenna should be installed and operated with minimum distance of 20 cm between the radiator and your body. Antenna gain must be below 3 dBi.

This transmitter must not be co-located or operating in conjunction with any other antenna or transmitter. The host end product must include a user manual that clearly defines operating requirements and conditions that must be observed to ensure compliance with current FCC RF exposure guidelines.

For portable devices, in addition to above, a separate approval is required to satisfy the SAR requirements of FCC Part 2.1093.

If the device is used for other equipment that separate approval is required for all other operating configurations, including portable configurations with respect to 2.1093 and different antenna configurations.

FCC Class B digital device notice

This equipment has been tested and found to comply with the limits for a Class B digital device, pursuant to part 15 of the FCC Rules. These limits are designed to provide reasonable protection against harmful interference in a residential installation. This equipment generates, uses and can radiate radio frequency energy and, if not installed and used in accordance with the instructions, may cause harmful interference to radio communications. However, there is no guarantee that interference will not occur in a particular installation. If this equipment does cause harmful interference to radio or television reception, which can be determined by turning the equipment off and on, the user is encouraged to try to correct the interference by one or more of the following measures:

• Reorient or relocate the receiving antenna.

• Increase the separation between the equipment and receiver.

• Connect the equipment into an outlet on a circuit different from that to which the receiver is connected.

• Consult the dealer or an experienced radio/TV technician for help.

Labelling Requirements for the Host device

The host device shall be properly labelled to identify the modules within the host device. The certification label of the module shall be clearly visible at all times when installed in the host device, otherwise the host device must be labelled to display the FCC ID and ISED of the module, preceded by the words "Contains transmitter module", or the word "Contains", or similar wording expressing the same meaning, as follows:

Model: WIFI module

Contains FCC ID：2AU7O-T102V11

The host OEM user manual must also contain clear instructions on how end users canfind and/or access the module and the FCC ID and ISED.

Model: WIFI module

Contains FCC ID：2AU7O-T102V11

OEM Statement

a. The module manufacturer must show how compliance can be demonstrated only for specific host or hosts

b. The module manufacturer must limit the applicable operating conditions in which t transmitter will be used, and

c. The module manufacturer must disclose that only the module grantee can make the te evaluation that the module is compliant in the host. When the module grantee either refuses to make this evaluation, or does not think it is necessary, the module certification is rendered invalid for use in the host, and the host manufacturer has no choice other than to use a different module, or take responsibility (§ 2.929) and obtain a new FCC ID for the product.

d. The module manufacturer must provide the host manufacturer with the followi requirements:

i. The host manufacturer is responsible for additional testing to verify compliance as composite system. When testing the host device for compliance with Part 15 Subpart B, the host manufacturer is required to show compliance with Part 15 Subpart B while the transmitter module(s) are installed and operating. The modules should be transmitting and the evaluation should confirm that the module’s intentional emissions are compliant (i.e. fundamental and out of band emissions).

Requirement per KDB996369 D03

2.2 List of applicable FCC rules

List the FCC rules that are applicable to the modular transmitter. These are the rules that specifically establish the bands of operation, the power, spurious emissions, and operating fundamental frequencies. DO NOT list compliance to unintentional-radiator rules (Part 15 Subpart B) since that is not a condition of a module grant that is extended to a host manufacturer. See also Section 2.10 below concerning the need to notify host manufacturers that further testing is required.3

Explanation: This module meets the requirements of Part 15 Subpart C Section 15.247

2.3 Summarize the specific operational use conditions

Describe use conditions that are applicable to the modular transmitter, including for example any limits on antennas, etc. For example, if point-to-point antennas are used that require reduction in power or compensation for cable loss, then this information must be in the instructions. If the use condition limitations extend to professional users, then instructions must state that this information also extends to the host manufacturer's instruction manual. In addition, certain information may also be needed, such as peak gain per frequency band and minimum gain, specifically for master devices in 5 GHz DFS bands.

Explanation: The module has Antenna.

2.4 Limited module procedures

If a modular transmitter is approved as a "limited module," then the module manufacturer is responsible for approving the host environment that the limited module is used with. The manufacturer of a limited module must describe, both in the filing and in the installation instructions, the alternative means that the limited module manufacturer uses to verify that the host meets the necessary requirements to satisfy the module limiting conditions.

A limited module manufacturer has the flexibility to define its alternative method to address the conditions that limit the initial approval, such as: shielding, minimum signaling amplitude, buffered modulation/data inputs, or power supply regulation. The alternative method could include that the limited module manufacturer reviews detailed test data or host designs prior to giving the host manufacturer approval.

This limited module procedure is also applicable for RF exposure evaluation when it is necessary to demonstrate compliance in a specific host. The module manufacturer must state how control of the product into which the modular transmitter will be installed will be maintained such that full compliance of the product is always ensured. For additional hosts other than the specific host originally granted with a limited module, a Class II permissive change is required on the module grant to register the additional host as a specific host also approved with the module.

Explanation: The module is a limited module.

2.5 Trace antenna designs

For a modular transmitter with trace antenna designs, see the guidance in Question 11 of KDB Publication 996369 D02 FAQ – Modules for Micro-Strip Antennas and traces. The integration information shall include for the TCB review the integration instructions for the following aspects: layout of trace design, parts list (BOM), antenna, connectors, and isolation requirements.

a) Information that includes permitted variances (e.g., trace boundary limits, thickness, length, width, shape(s), dielectric constant, and impedance as applicable for each type of antenna);

b) Each design shall be considered a different type (e.g., antenna length in multiple(s) of frequency, the wavelength, and antenna shape (traces in phase) can affect antenna gain and must be considered);

c) The parameters shall be provided in a manner permitting host manufacturers to design the printed circuit (PC) board layout;

d) Appropriate parts by manufacturer and specifications;

e) Test procedures for design verification; and

f) Production test procedures for ensuring compliance.

The module grantee shall provide a notice that any deviation(s) from the defined parameters of the antenna trace, as described by the instructions, require that the host product manufacturer must notify the module grantee that they wish to change the antenna trace design. In this case, a Class II permissive change application is required to be filed by the grantee, or the host manufacturer can take responsibility through the change in FCC ID (new application) procedure followed by a Class II permissive change application.

Explanation: Yes, The module without trace antenna designs.

2.6 RF exposure considerations

It is essential for module grantees to clearly and explicitly state the RF exposure conditions that permit a host product manufacturer to use the module. Two types of instructions are required for RF exposure information: (1) to the host product manufacturer, to define the application conditions (mobile, portable – xx cm from a person's body); and (2) additional text needed for the host product manufacturer to provide to end users in their end-product manuals. If RF exposure statements and use conditions are not provided, then the host product manufacturer is required to take responsibility of the module through a change in FCC ID (new application).

Explanation: This module complies with FCC RF radiation exposure limits set forth for an uncontrolled environment. This module is designed to comply with the FCC statement, FCC ID is: 2AU7O-T102V11

2.7 Antennas

A list of antennas included in the application for certification must be provided in the instructions. For modular transmitters approved as limited modules, all applicable professional installer instructions must be included as part of the information to the host product manufacturer. The antenna list shall also identify the antenna types (monopole, PIFA, dipole, etc. (note that for example an "omni-directional antenna" is not considered to be a specific "antenna type")).

For situations where the host product manufacturer is responsible for an external connector, for example with an RF pin and antenna trace design, the integration instructions shall inform the installer that unique antenna connector must be used on the Part 15 authorized transmitters used in the host product. The module manufacturers shall provide a list of acceptable unique connectors.

Explanation: The module has Antenna

2.8 Label and compliance information

Grantees are responsible for the continued compliance of their modules to the FCC rules. This includes advising host product manufacturers that they need to provide a physical or e-label stating "Contains FCC ID" with their finished product. See Guidelines for Labeling and User Information for RF Devices – KDB Publication 784748.

Explanation: The host system using this module, should have label in a visible area indicated the following texts: "Contains FCC ID: : 2AU7O-T102V11

2.9 Information on test modes and additional testing requirements

Additional guidance for testing host products is given in KDB Publication 996369 D04 Module Integration Guide. Test modes should take into consideration different operational conditions for a stand-alone modular transmitter in a host, as well as for multiple simultaneously transmitting modules or other transmitters in a host product.

The grantee should provide information on how to configure test modes for host product evaluation for different operational conditions for a stand-alone modular transmitter in a host, versus with multiple, simultaneously transmitting modules or other transmitters in a host.

Grantees can increase the utility of their modular transmitters by providing special means, modes, or instructions that simulates or characterizes a connection by enabling a transmitter. This can greatly simplify a host manufacturer's determination that a module as installed in a host complies with FCC requirements.

Explanation: Data transfer module demo board can control the EUT work in RF test mode at spcified test channel.

2.10 Additional testing, Part 15 Subpart B disclaimer

The grantee should include a statement that the modular transmitter is **only** FCC authorized for the specific rule parts (i.e., FCC transmitter rules) listed on the grant, and that the host product manufacturer is responsible for compliance to any other FCC rules that apply to the host not covered by the modular transmitter grant of certification. If the grantee markets their product as being Part 15 Subpart B compliant (when it also contains unintentional-radiator digital circuity), then the grantee shall provide a notice stating that the final host product still requires Part 15 Subpart B compliance testing with the modular transmitter installed.

Explanation: The module without unintentional-radiator digital circuity, so the module does not require an evaluation by FCC Part 15 Subpart B. The host shoule be evaluated by the FCC Subpart B.