Acrylic Wireless Charger

Quick Start Guide

WHAT'S INCLUDED

- (1) Acrylic Wireless Charging Pad
- (1) Acrylic Phone Stand Base
- (1) 20W PD Wall Charger
- (1) 72" Type-C to Type-C Charging Cable with 90° Tip

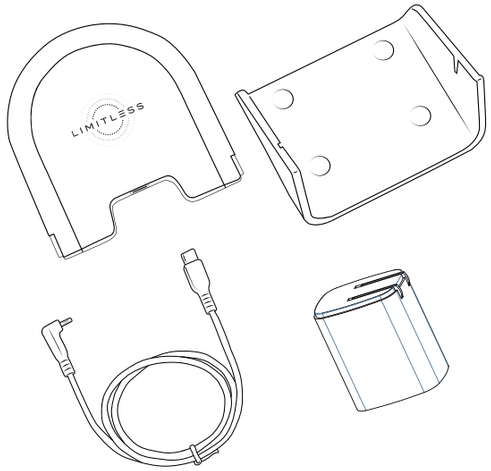

COMPONENTS

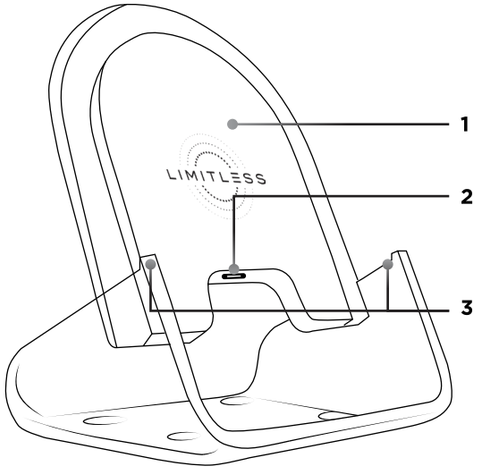

1. Wireless Charging Pad
2. Type-C Input
3. Horizontal Phone Stand

ASSEMBLING THE CHARGER

1. Slide the Wireless Charging Pad into the crevices of the Base with the taller edges in front.

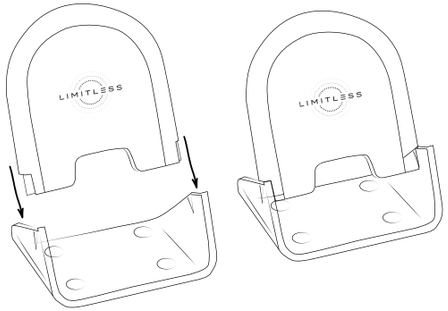

2. Plug the 90° angle end of the included 72" Type-C Charging Cable into the Type-C Input (see Component 2).
3. Connect the Type-C Charging Cable to the included Wall Charger.
4. Plug Wall Charger into wall outlet, and the Acylic Wireless Charger is ready for use.

CHARGING A DEVICE

Place the wireless-compatible smartphone on the Charger with the screen facing up. Phone is charging when blue indicator backlights are illuminated. Once device reaches 100% charge, the lights will turn off.

USING THE PHONE STAND

The Phone Stand can accommodate phones in both vertical and horizontal orientation while charging the device.

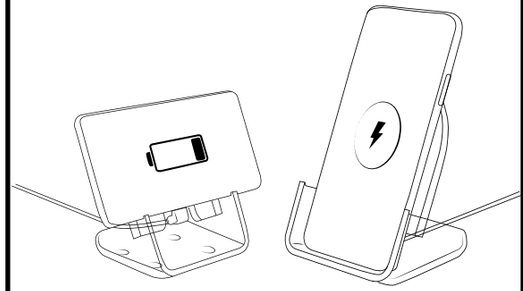

LIMITLESS™

All rights reserved. Limitless™ is a trademark of Limitless Innovations, Inc. Design and specifications subject to change without notice. Products may vary from images shown.
Accessories sold separately.

LimitlessInnovations.com
Support@LimitlessInnovations.com
(855) 843-4828

Limitless Innovations, Inc.
4800 Metalmaster Way
McHenry, IL 60050

© Limitless Innovations, Inc.

@LimitlessInnovations /LimitlessInnov

/LimitlessInnov /LimitlessInnov Limitless Innovations

TECH SPECS

Model: LIM-ACRWC-000

Acrylic Wireless Charger

Type-C Input: 5V/2A, 9V/2A | 18W Max
Wireless Output: 5W | 7.5W | 10W | 15W
Dimensions: 3.74” x 2.88” x 4.57”
Weight: 280 g (0.617 lb)

20W PD Wall Charger

AC Input: 110V-220V | 50-60 Hz
Type-C Output: 20W PD | 5V/3A, 9V/2.22A, 12V/1.67A

SAFETY INFORMATION

By using the Limitless Acrylic Wireless Charger (Acrylic Wireless Charger), you hereby agree that Limitless Innovations, Inc., an Illinois corporation and its affiliates (“Limitless”) shall have no liability for any losses associated with property damage, personal injury or loss of life that are incurred by you or by any third party in connection with or relating in any manner whatsoever to your use of the Acrylic Wireless Charger. By using the Acrylic Wireless Charger, you hereby agree at all times to comply fully with all safety warnings, operating instructions and general safety information in this user manual. By using the Acrylic Wireless Charger, you further agree to hold harmless Limitless, (and Limitless’ officers, directors, SCANT shareholders and employees) in connection with any losses sustained by you (including, without limitation, losses arising in whole or in part from property damage, personal injury or loss of life) relating in any manner whatsoever to your use of the Acrylic Wireless Charger.

WARNING

- The Acrylic Wireless Charger is **NOT** a toy and should be kept away from children.
- Do **NOT** use the Acrylic Wireless Charger near a magnetic or electric field.
- Do **NOT** use the Acrylic Wireless Charger if it has been damaged and/or modified.
- Do **NOT** subject the Acrylic Wireless Charger to harsh chemicals.
- Do **NOT** submerge the Acrylic Wireless Charger or its accessories in water.
- Do **NOT** insert any foreign objects into the openings or port of the Acrylic Wireless Charger.
- Do **NOT** charge the Acrylic Wireless Charger in high humidity conditions.
- Do **NOT** attempt to replace the battery as it is a non-serviceable part.
- Do **NOT** attempt to disassemble, repair, or open the Acrylic Wireless Charger or its accessories in any way.
- Do **NOT** paint or apply coatings to the Acrylic Wireless Charger as you might affect moving parts or damage internal components.
- Do **NOT** use third party power supplies or non-approved adapters with the Acrylic Wireless Charger.
- Do **NOT** use at an altitude higher than 6,562 feet (2,000 meters).
- Batteries should be recycled or disposed of, as per state and local guidelines.

SCAN TO LEARN MORE:

This device complies with Part 15 of the FCC rules. Operation is subject to the following two conditions: 1) this device may not cause harmful interference, and 2) this device must accept any interference received, including interference that may cause undesired operation.

Note: This equipment has been tested and found to comply with the limits for a Class B digital device, pursuant to part 15 of the FCC Rules. These limits are designed to provide reasonable protection against harmful interference in a residential installation.

This equipment generates uses and can radiate radio frequency energy and, if not installed and used in accordance with the instructions, may cause harmful interference to radio communications. However, there is no guarantee that interference will not occur in particular installation. If this equipment does cause harmful interference to radio or television reception, which can be determined by turning the equipment off and on, the user is encouraged to try to correct the interference by one or more of the following measures:

--Reorient or relocate the receiving antenna.

--Increase the separation between the equipment and receiver.

--Connect the equipment into an outlet on a circuit different from that to which the receiver is connected.

--Consult the dealer or an experienced radio/TV technician for help.

Changes or modifications not expressly approved by the party responsible for compliance could void the user's authority to operate the equipment.

Radiation Exposure Statement

This device complies with FCC RF radiation exposure limits set forth for an uncontrolled environment.

The FCC certification of this device refers to RF exposure testing performed in typical operating conditions, where a person is no closer than 20 centimeters from the device surface at all times, except for non-repetitive patterns with transient time intervals in the order of a second. Only in the stated conditions, the device is shown to fully comply with the FCC RF Exposure requirements of KDB 447498.