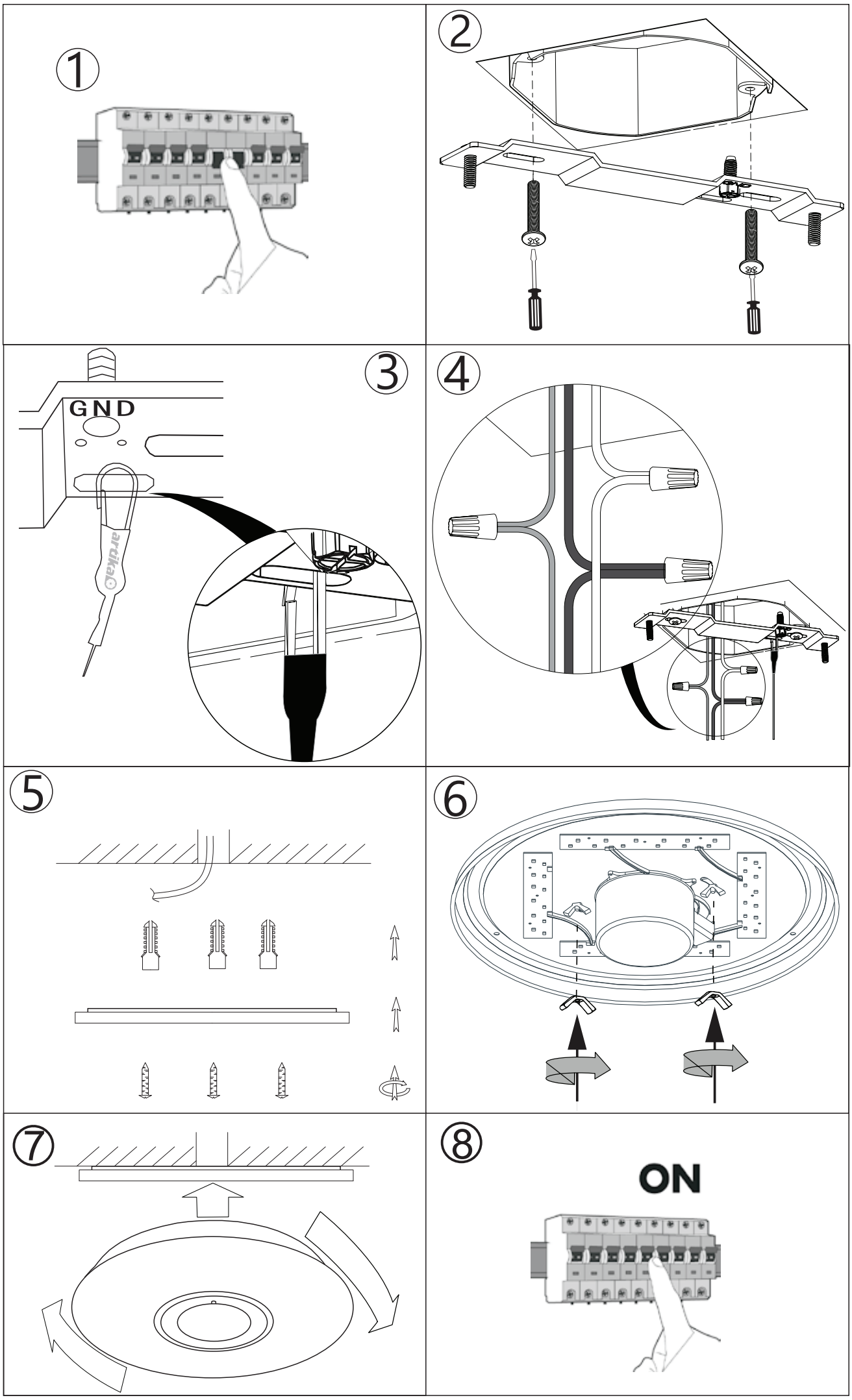
①
②
③
GND
④
⑤
⑥
⑦
⑧
ON

Surface mounted Ceiling Lamp LED 24W Model: CL-GLX-C

Part I: To connect with APP through Bluetooth for CCT+ Dimmable +RGB Lighting Control.

1. Installing the app Search for the Tuya app in the App Store or Google Play and install it on your device or scan the respective QR code here:

2. Registration: Open the app and tap on 'registration'. In the app, provide either your mobile phone number or your email address to create a user account.

Mobile phone number 1.Specify the country in the first field.
2. Enter your mobile phone number in the second field. Immediately following this, you will receive a confirmation code by SMS.
3. Enter the code in the confirmation code field, set the password for your user account and tap on ‘Fertig' (done).

Email address 1.Specify the country in the first field.
2. Enter your email address in the second field and tap on 'Weiter' (next).
3.Establish a password using numerals and letters and tap on 'Fertig' (done).

3. Connecting the light fixture

1.Make sure that the BT light fixture is connected to the voltage indicated on the label.

2.Plug the power adapter into an appropriate mains socket.

3. Fast -operate wall switch through ON-OFF-ON-OFF-ON, the BT light fixture starts flashing quickly.

4. Connecting with the app

1.If you have completed all previous steps, open the app, sign in and tap on add device.

2.Select the category 'light fixture (Bluetooth)' and tap on next step.

3. Bluetooth network is scanning the desired light fixture.

4. The devices are now being connected, which can take a while.

5. On success, a short message and the connected device appear in the app.

6. Now set a unique name via 'Name (change name) for the BT light fixture to facilitate further control.

7. Step into the operation mode: 3000K-6000K, RGB, contextual mode and music mode.

Part II: To connect with Bluetooth Loudspeaker.

1. Make sure that the BT light fixture is connected to the voltage indicated on the label, there will be a voice 'Beap' for ready pairing.

2. To find the 'Music One' in Bluetooth Settings, and insert the password '1234'.

3. After pairing successfully, there will be a voice 'Ding-Dong' indication.

4. Play with the music.

5. Unpairing: Work into the Bluetooth Settings and close the Bluetooth or cancel 'Music One'. There will be a voice 'Ling' indication.

FCC Warning:

This equipment has been tested and found to comply with the limits for a Class B digital device, pursuant to part 15 of the FCC Rules. These limits are designed to provide reasonable protection against harmful interference in a residential installation. This equipment generates, uses and can radiate radio frequency energy and, if not installed and used in accordance with the instructions, may cause harmful interference to radio communications. However, there is no guarantee that interference will not occur in a particular installation. If this equipment does cause harmful interference to radio or television reception, which can be determined by turning the equipment off and on, the user is encouraged to try to correct the interference by one or more of the following measures:

- Reorient or relocate the receiving antenna.
- Increase the separation between the equipment and receiver.
- Connect the equipment into an outlet on a circuit different from that to which the receiver is connected.
- Consult the dealer or an experienced radio/TV technician for help.

Caution: Any changes or modifications to this device not explicitly approved by manufacturer could void your authority to operate this equipment.

This device complies with part 15 of the FCC Rules. Operation is subject to the following two conditions: (1) This device may not cause harmful interference, and (2) this device must accept any interference received, including interference that may cause undesired operation.

The device has been evaluated to meet general RF exposure requirement. The device can be used in portable exposure condition without restriction.

This device complies with license-exempt transmitter(s)/receiver(s)
that comply with Innovation, Science and Economic Development Canada's licence-exempt RSS standard(s).
Operation is subject to the following two conditions:
(1) this device may not cause harmful interference, and
(2) this device must accept any interference received, including interference that may cause undesired operation.
L'émetteur/récepteur exempt de licence contenu dans le présent appareil est conforme aux CNR d'Innovation, Sciences et Développement économique Canada applicables aux appareils radio exempts de licence.

L'exploitation est autorisée aux deux conditions suivantes:
(1) l'appareil ne doit pas produire de brouillage, et
(2) l'appareil doit accepter tout brouillage radioélectrique subi, même si le brouillage est susceptible d'en compromettre le fonctionnement.