BOJINGnet L107 IOT Router Module

Datasheet

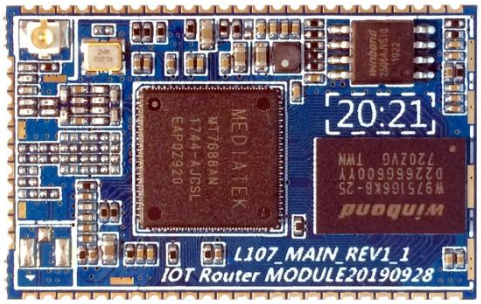

Name: 802.11b/g/n L107 IOT Router Module

Model No.: L107

Revision: v1.1

Manufacturers:Shenzhen BOJINGnet Technology Co., Ltd
Tel:15817228358
Emil:2529041661@qq.com or panben15817228358@163.com

Revision History

Revision	Date	Description	Approved	Remark
REV1.0	20170611	Initial Release	PanyuLu	
REV1.0	20180403	Correction error	PanyuLu	
REV1.1	20191105	Update the appearance	PanyuLu	

Contents

1 . Overview.....3
2 . Features.....3
3 . Applications.....3
4 . Fuctional Block Diagram.....4
5 . Module Specifications.....4
6 . Module Pinout and Pin Description.....5
7 . Electrical Characteristics.....7
8 . PCB Footprint and Dimensions.....8
9 . Manufacturing Process Recommendations.....8
10. Ordering Information.....9

1. Overview

BOJINGnet L107 IOT Rourer Module is based on MediaTek MT7688 chipset.the module requires only an external 3.3V power supply. MT7688 chipset integrates a 1T1R 802.11n Wi-Fi radio, a 580MHz MIPS® 24KEc™ CPU, 1-port fast Ethernet PHY, USB2.0 host, SD-XC, I2S/PCM and multiple low-speed IOs in a single SOC. The MT7688 supports two operation modes – IoT gateway and IoT device mode. The high-performance USB 2.0 allows MT7688 to add 3G/4GLTE modem support or a H.264 ISP for wireless IP camera. The IoT gateway mode also supports Zigbee/Z-Wave and Sub-1 GHz RF for smart home control. In IoT device mode, MT7688 supports eMMC, SD-XC and USB 2.0 in addition to Wi-Fi high quality audio via 192Kbps/24bits I2S interface and VoIP application through PCM, as well as peripheral interfaces including PWM, SPI host, 3rd UART and more GPIOs.

2. Features

◆Embedded MIPS24KEc (575/580 MHz) with 64 KB I-Cache and 32 KB D-Cache

◆1T1R 2.4 GHz with 150 Mbps PHY data rate

◆Legacy 802.11b/g and HT 802.11n modes

◆20/40 MHz channel bandwidth

◆DDR2 RAM 64MByte or 128MByte or 256MByte

◆SPI Flash 8MByte or 16MByte or 32MByte

◆5-port 10/100 FE PHY

◆x1 USB 2.0 Host

◆SD-XC, eMMC, I2C, PCM, I2S(192K/24bits), PWM, SPI master/slave, UART lite, JTAG, GPIO

◆Internet Of Things

◆Embedded PMU

◆Support AP/Client/Router mode

◆WEP64/128, TKIP, AES, WPA, WPA2, WAPI

◆40mm(L) x 25mm(W) x 3.0mm(H)dimension LCC61 pin

3. Applications

Internet Of Things

USB WiFi Camera

WiFi audio

WiFi disk

3G/4G Wi-Fi Router

WiFi ap or WiFi RJ45

Smart Home Gateway

Data Transfer unit

Industry Control or Home Automation

4. Fuctional Block Diagram

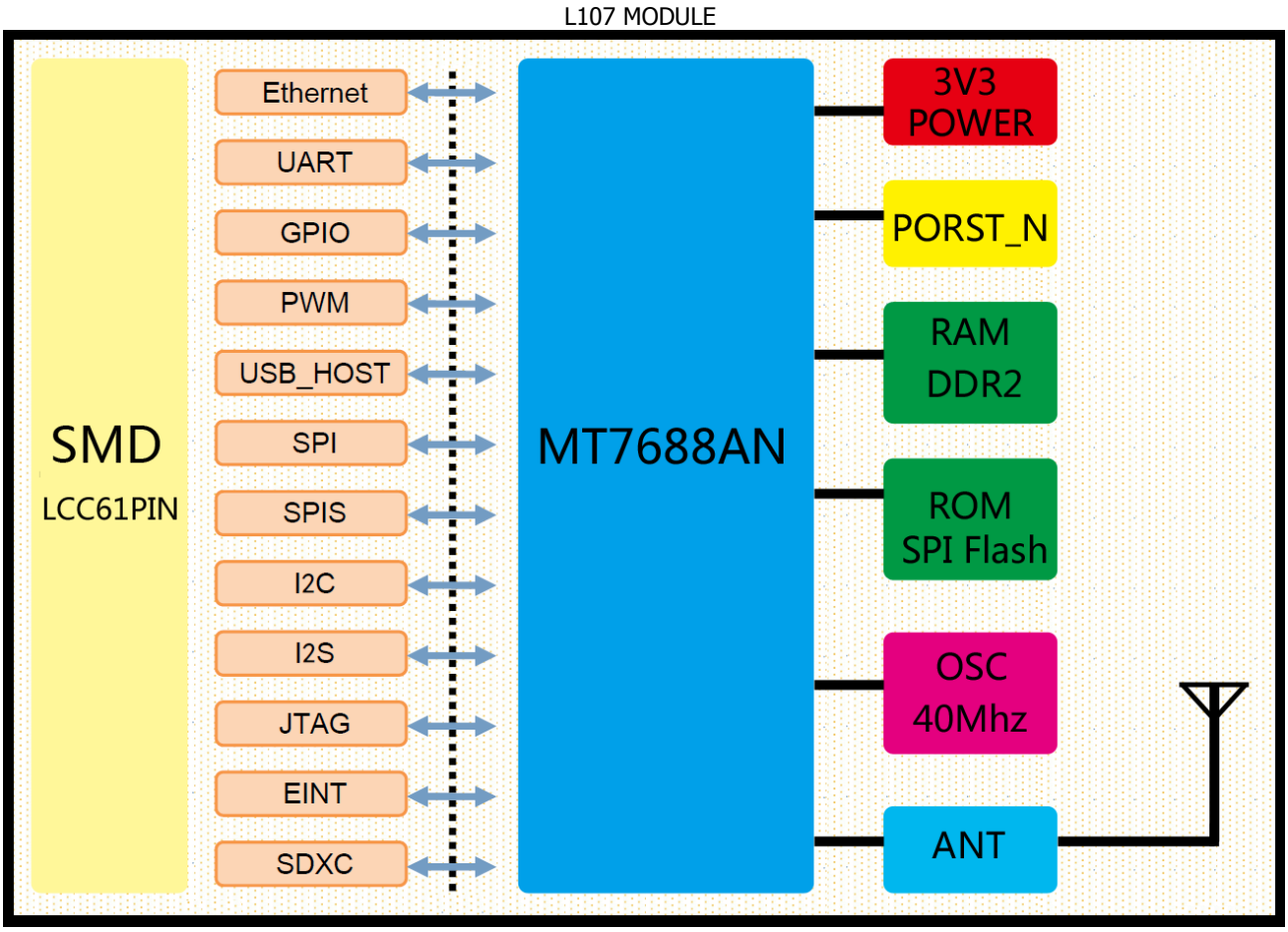

5. Module Specifications

Hardware Features	
Model	L107
Antenna Type	Ipex or LCC PIN
Chipset solution	MT7688AN
Voltage Input	3v3 ±5%
Dimension(L ×W ×H)	40mm*25.0mm*3.0mm LCC 61PIN
Wireless Features	
Wireless Standards	IEEE 802.11b/g/n
Frequency Range	2.412GHz-2.484GHz
Data Rates	IEEE 802.11b : 1,2,5.5,11Mbps
	IEEE 802.11g : 6,9,12,18,24,36,48,54Mbps
	IEEE 802.11n : MCS0--MCS7 @ HT20
	MCS0--MCS7 @ HT40
Receiver Sensitivity	HT40 MCS7 : -70dBm@10% PER(MCS7)
	HT20 MCS7 : -73dBm@10% PER(MCS7)
	54M: -77dBm@10% PER
	11M: -89dBm@ 8% PER
Modulation Technique	DSSS (DBPSK, DQPSK, CCK)
	OFDM (BPSK, QPSK, 16-QAM, 64-QAM)
Wireless Security	WPA/WPA2, WEP, TKIP and AES, WPS2.0, WAPI

Others	
Environment	Operating Temperature: -20℃~55℃
	Storage Temperature: -40℃~125℃
	Operating Humidity: 10%~90% non-condensing
	Storage Humidity: 5%~90% non-condensing
Certification	FCC CE RoHs The ongoing

6. Module Pinout and Pin Description

6.1 Module Layout:

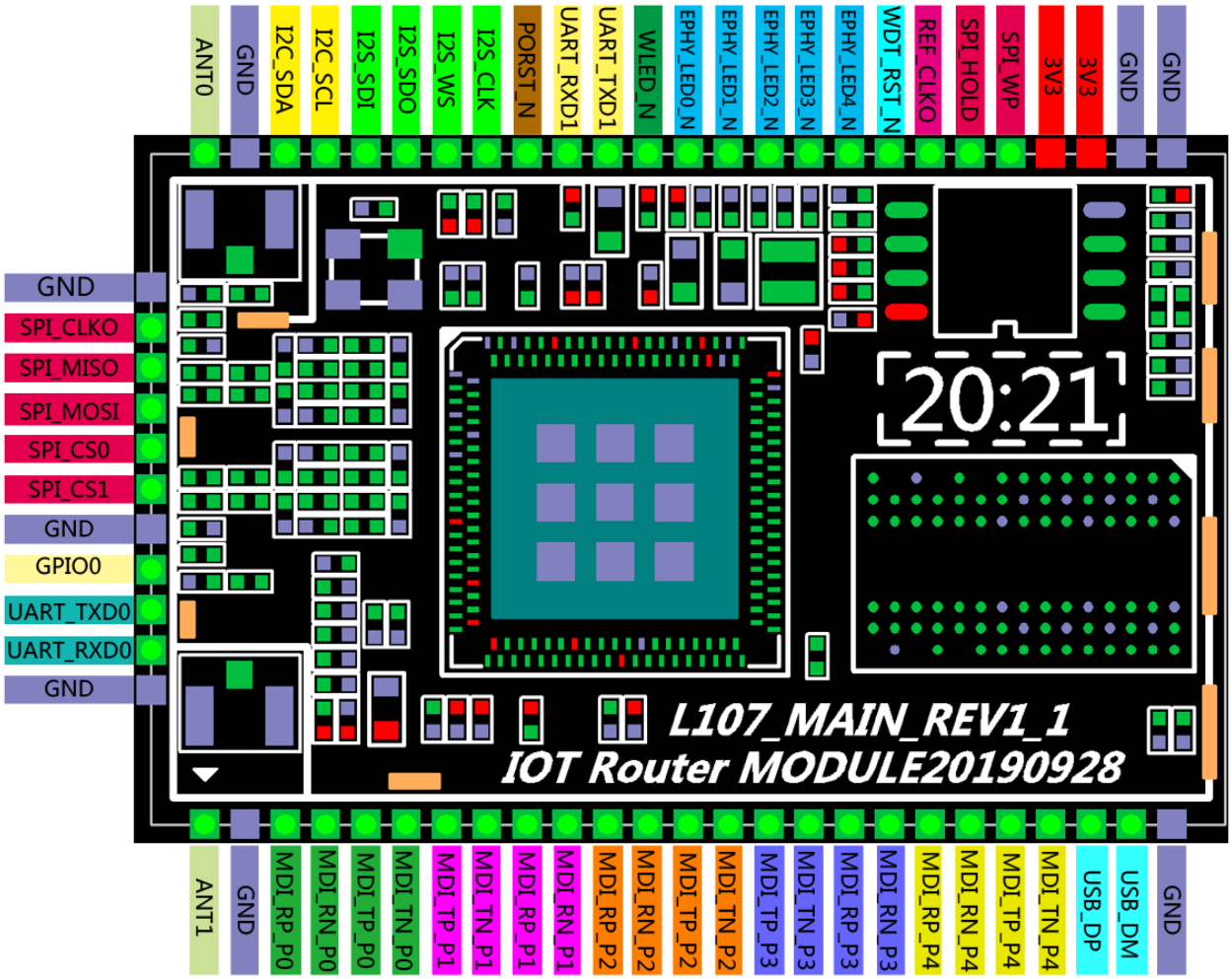

6.2 Module Logic:

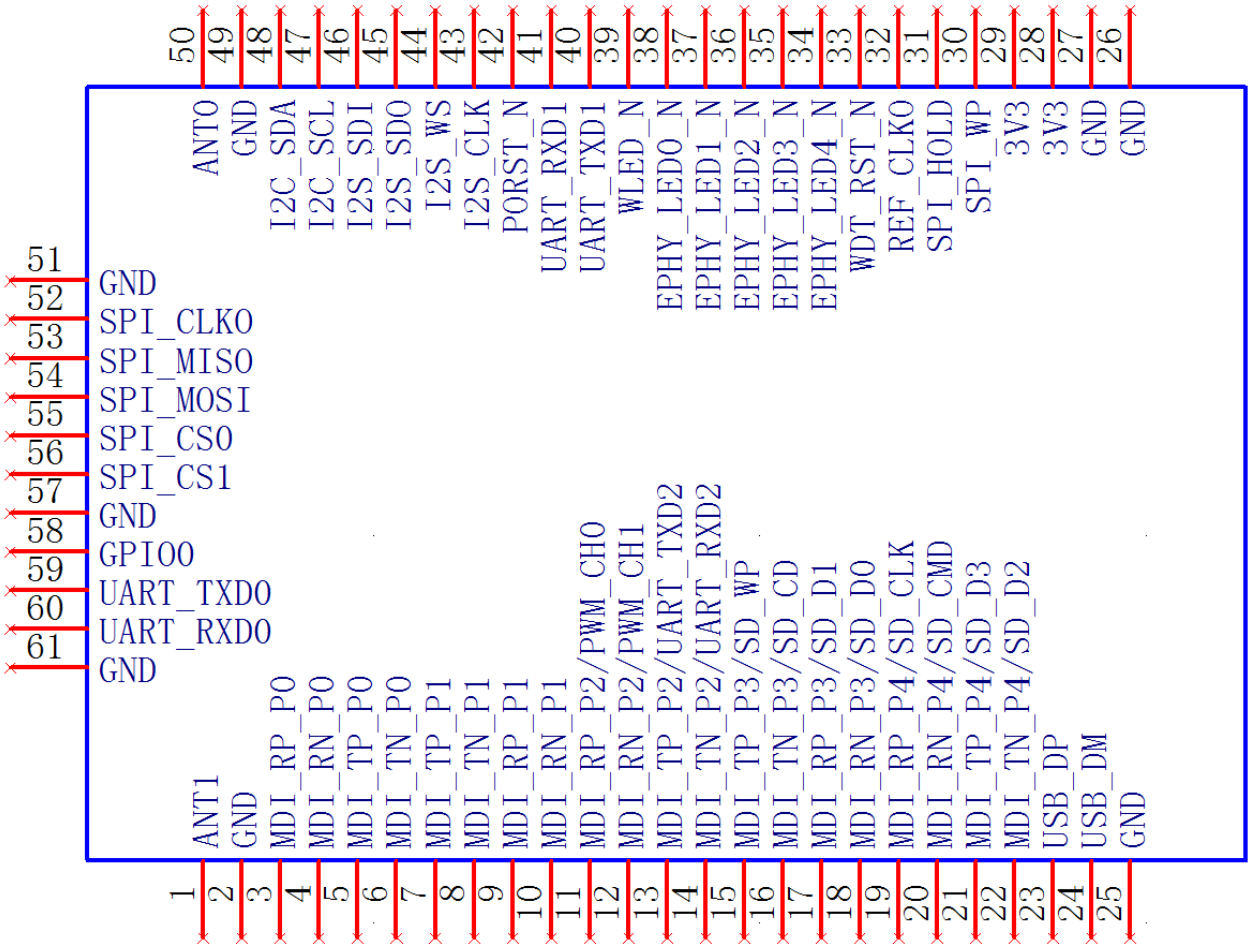

6.3 Pin Description:

Pin No.	Function 1	Function 2	Function 3	Function 4	GPIO#	Remark
1	ANT1					
2	GND					
3	MDI_RP_P0					
4	MDI_RN_P0					
5	MDI_TP_P0					
6	MDI_TN_P0					
7	MDI_TP_P1	SPIS_CS		PWM_CH0	GPIO#14	
8	MDI_TN_P1	SPIS_CLK		PWM_CH1	GPIO#15	
9	MDI_RP_P1	SPIS_MISO		UART_TXD2	GPIO#16	
10	MDI_RN_P1	SPI_MOSI		UART_RXD2	GPIO#17	
11	MDI_RP_P2		eMMC_D7	PWM_CH0	GPIO#18	
12	MDI_RN_P2		eMMC_D6	PWM_CH1	GPIO#19	
13	MDI_TP_P2	UART_TXD2	eMMC_D5	PWM_CH2	GPIO#20	
14	MDI_TN_P2	UART_RXD2	eMMC_D4	PWM_CH3	GPIO#21	
15	MDI_TP_P3	SD_WP	eMMC_WP		GPIO#22	
16	MDI_TN_P3	SD_CD	eMMC_CD		GPIO#23	
17	MDI_RP_P3	SD_D1	eMMC_D1		GPIO#24	
18	MDI_RN_P3	SD_D0	eMMC_D0		GPIO#25	
19	MDI_RP_P4	SD_CLK	eMMC_CLK		GPIO#26	
20	MDI_RN_P4	SD_CMD	eMMC_CMD		GPIO#28	

21	MDI_TP_P4	SD_D3	eMMC_D3		GPIO#29	
22	MDI_TN_P4	SD_D2	eMMC_D2		GPIO#27	
23	USB_DP					
24	USB_DM					
25	GND					
26	GND					
27	GND					
28	3V3					
29	3V3					
30	SPI_WP					
31	SPI_HOLD					
32	REF_CLKO				GPIO#38	
33	WDT_RST_N				GPIO#37	
34	EPHY_LED4_N	JTAG_RST_N			GPIO#39	
35	EPHY_LED3_N	JTAG_CLK			GPIO#40	
36	EPHY_LED2_N	JTAG_TMS			GPIO#41	
37	EPHY_LED1_N	JTAG_TDI			GPIO#42	
38	EPHY_LED0_N	JTAG_TDO			GPIO#43	
39	WLED_N				GPIO#44	
40	UART_TXD1			PWM_CH0	GPIO#45	Bootstrapping Pins is relevant
41	UART_RXD1			PWM_CH1	GPIO#46	
42	PORST_N					
43	I2S_CLK	PCMFS			GPIO#3	
44	I2S_WS	PCMCLK			GPIO#2	
45	I2S_SDO	PCMDTX			GPIO#1	Bootstrapping Pins is relevant
46	I2S_SDI	PCMDRX			GPIO#0	
47	I2C_SCL				GPIO#4	
48	I2C_SDA				GPIO#5	
49	GND					
50	ANT0					
51	GND					
52	SPI_CLKO				GPIO#7	Bootstrapping Pins is relevant
53	SPI_MISO				GPIO#9	
54	SPI_MOSI				GPIO#8	Bootstrapping Pins is relevant
55	SPI_CS0				GPIO#10	
56	SPI_CS1				GPIO#6	Bootstrapping Pins is relevant
57	GND					
58	GPIO0				GPIO#11	
59	UART_TXD0				GPIO#12	Bootstrapping Pins is relevant
60	UART_RXD0				GPIO#13	
61	GND					

Note: Serial port 0 debugging is recommended ;The company system default Function 1 ; Change the relevant kernel drivers if reuse is required

7. Electrical Characteristics

7.1 Recommended Operation Ratings

Parameter	Symbol	Minimum	Typical	Maximum	Unit
Extended temp	Ta	-20	26	55	℃
Power Supply	3V3	3.15	3.3	3.5	v
Input Low Voltage	VIL	-0.3		0.8	v
Input High Voltage	VIH	2		3.6	v

7.2 Measurement Conditions

System state	Current (Typ) 3.3V	Current (Max) 3.3V
Standby	180 mA	200 mA
Full load operation	650 mA	800 mA

Note: Dc-dc shall adopt a design larger than 1A

8. PCB Footprint and Dimensions

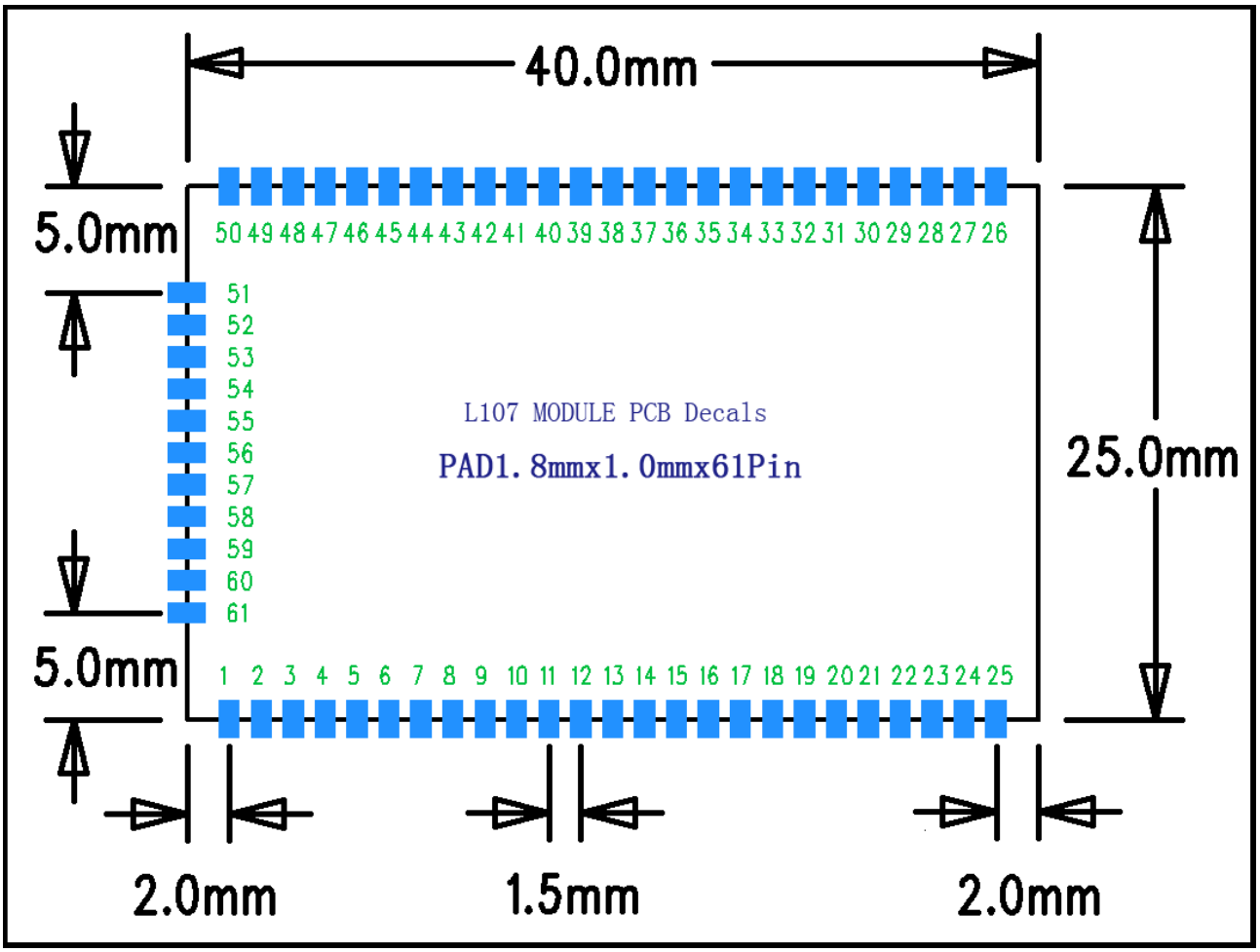

9. Manufacturing Process Recommendations

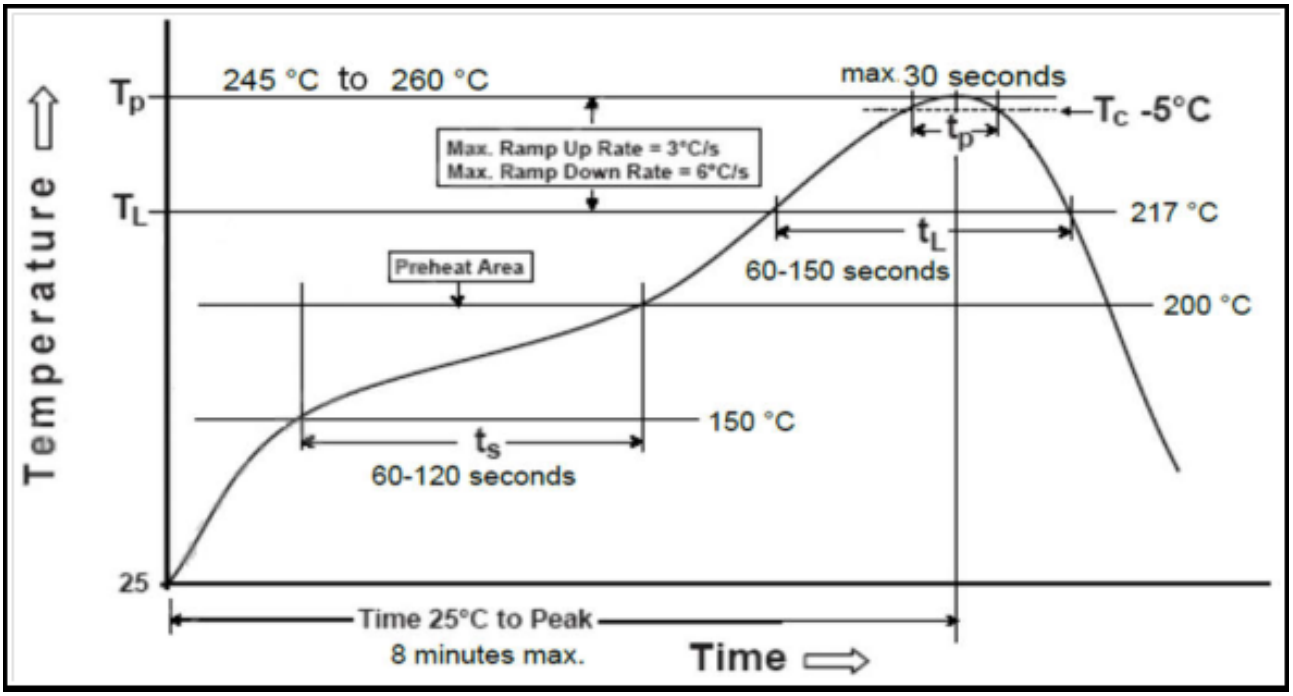

Note：The final soldering temperature chosen at the factory depends on additional external factors like choice of soldering paste , size , thickness and properties of the baseboard , etc. Exceeding the maximum soldering temperature in the recommended soldering profile may permanently damage the module.

10. Ordering Information

Module No.	SPI Flash Size	DDR2 Size
L107_0864	8MByte	64MByte
L107_16128	16MByte	128MByte
L107_32256	32MByte	256MByte

FCC Warnning:

This equipment has been tested and found to comply with the limits for a Class B digital device, pursuant to part 15 of the FCC Rules. These limits are designed to provide reasonable protection against harmful interference in a residential installation. This equipment generates, uses and can radiate radio frequency energy and, if not installed and used in accordance with the instructions, may cause harmful interference to radio communications. However, there is no guarantee that interference will not occur in a particular installation. If this equipment does cause harmful interference to radio or television reception, which can be determined by turning the equipment off and on, the user is encouraged to try to correct the interference by one or more of the following measures:

• Reorient or relocate the receiving antenna.

• Increase the separation between the equipment and receiver.

• Connect the equipment into an outlet on a circuit different from that to which the receiver is connected.

• Consult the dealer or an experienced radio/TV technician for help.

Caution: Any changes or modifications to this device not explicitly approved by manufacturer could void your authority to operate this equipment.

This device complies with part 15 of the FCC Rules. Operation is subject to the following two conditions:

This device may not cause harmful interference, and (2) this device must accept any interference received, including interference that may cause undesired operation.

This equipment complies with FCC radiation exposure limits set forth for an uncontrolled environment. This equipment should be installed and operated with minimum distance 20cm between the radiator and your body.

Integration instructions for host product manufacturers according to KDB 996369 D03 OEM Manual v01

2.2 List of applicable FCC rules

CFR 47 FCC PART 15 SUBPART C has been investigated. It is applicable to the modular transmitter

2.3 Specific operational use conditions

This module is stand-alone modular. If the end product will involve the Multiple simultaneously transmitting condition or different operational conditions for a stand-alone modular transmitter in a host, host manufacturer have to consult with module manufacturer for the installation method in end system.

2.4 Limited module procedures

This module is Limited single modular without shielding, host manufacturer have to consult with module manufacturer for the module limiting conditions when integrate the module in the host. module manufacturer should reviews detailed test data or host designs prior to giving the host manufacturer approval.

2.5 Trace antenna designs

Not applicable

2.6 RF exposure considerations

This equipment complies with FCC radiation exposure limits set forth for an uncontrolled environment. This equipment should be installed and operated with minimum distance 20cm between the radiator & your body.

2.7 Antennas

This radio transmitter 2AU8R-L107 has been approved by Federal Communications Commission to operate with the antenna types listed below, with the maximum permissible gain indicated. Antenna types not included in this list that have a gain greater than the maximum gain indicated for any type listed are strictly prohibited for use with this device.

Antenna No.	Operate frequency band	Antenna Type	Maximum antenna gain
Antenna	2400-2500MHz	Wire Antenna	3.0dBi

2.8 Label and compliance information

The final end product must be labeled in a visible area with the following" Contains FCC ID:2AU8R-L107".

2.9 Information on test modes and additional testing requirements

Host manufacturer is strongly recommended to confirm compliance with FCC requirements for the transmitter when the module is installed in the host.

2.10 Additional testing, Part 15 Subpart B disclaimer

Host manufacturer is responsible for compliance of the host system with module installed with all other applicable requirements for the system such as Part 15 B.